No. PA-36AA

TCM®

PARTS CATALOGUE

ATTACHMENT

SIDE SHIFT(SS22B SS23B SS25B SS2A8 SS28A SS29A SS31A SS3A8)
FORK SHIFT(FS20A FS22A FS23A FS28A FS29A FS31A)
HINGED FORK(HF21A HF22A HF23A HF24A HF27A HF31A)
LOAD GRAB(LG2A4 LG2B4 LG2C4 LG2D4 LG2E4 LG2F4 LG2G4 LG2H4 LG3A4 LG3B4 LG3C4 LG3D4 LG3E4 LG3F4)
ROTATING CLAMP(PR2A7 PR2B7 PR2C7 PR2D7 PR2E7 PR2F7 PRX2A9 PRX2B9 PRX2C9 PRX2D9 PRX2E9 PRX2F9 PR3A7 PR3B7 PR3C7 PR3D7 PR3E7 PR3F7 PRX3A9 PRX3B9 PRX3C9 PRX3D9 PRX3E9 PRX3F9)
ROTATING FORK(RF206 RFX208 RF317 RFX319)
ROTATING DEVICE(RD206 RD21C RD306 RD31C)
ATT PIPING(AP021F AP121F AP221F AP031F AP131F AP231F)

FG20C17	FG20C6	FG20C6H	FG30C6	FG30C6H
FG20T17	FG20T6	FG20T6H	FG30T6	FG30T6H
FG25C17	FG25C6	FG25C6H	FG30W6	FG30W6H
FG25T17	FG25T6	FG25T6H		
	FG20W6	FG20W6H		
	FG25W6	FG25W6H		

FD20C17	FD20C6	FD20C6H	FD30C6	FD30C6H
FD20T17	FD20T6	FD20T6H	FD30T6	FD30T6H
FD25C17	FD25C6	FD25C6H	FD30W6	FD30W6H
FD25T17	FD25T6	FD25T6H		
	FD20W6	FD20W6H		
	FD25W6	FD25W6H		

TCM CORPORATION

ご使用のまえに

このパーツカタログは，アタッチメントの構成部品を収録しています。

部品ご注文について

部品ご注文の際は，必ず車両の形式・仕様・製造番号（号車），部品番号および注文数を明示してください。車両の製造番号（号車）は車両銘板に表示しています。

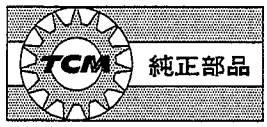

部品は，必ず「TCM純正部品」をご使用ください。
純正部品以外の部品をご使用になり，故障が発生した場合は保証できません。

ご使用について

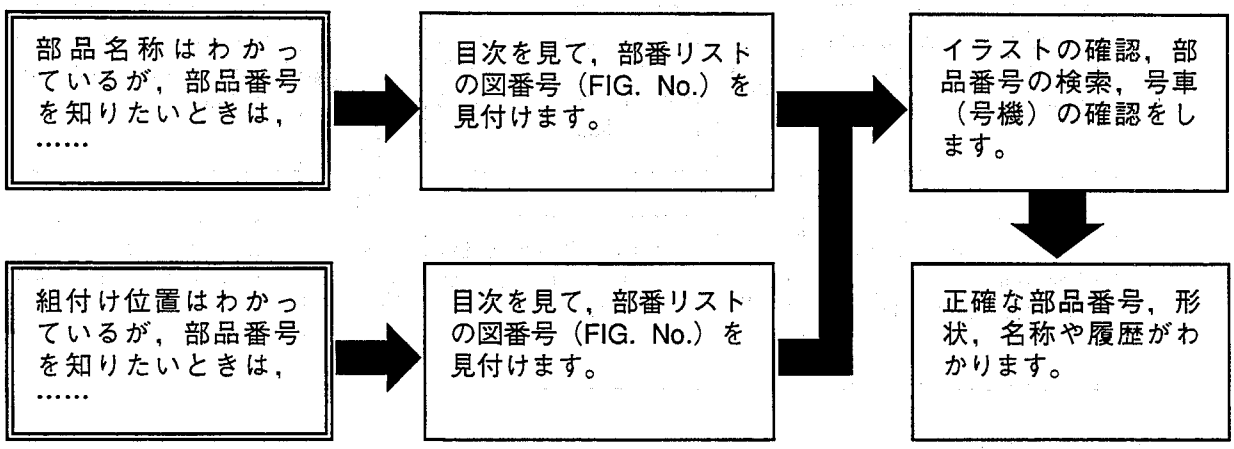

略語および記号

ＡＳＳＹ	組立品を示します。
ＲＨ	車両の前方向に向かって右側を示します。
ＬＨ	車両の前方向に向かって左側を示します。
ＡＲ	必要に応じた数を使用します。
＊	セットおよびキットの販売部品を示します。
Ｔ	厚みを示します。
＋	図示していません。
＃	単体販売しません。

部品は，品質向上のため予告なく変更することがありますので，あらかじめご了承ください。
詳細は，TCM指定整備工場にご相談ください。

INTRODUCTION

This Parts Catalogue contains the component parts of the ATTACHMENT.

How to order parts

When ordering, be sure to specify the model name, specification and serial number (machine number) of your machine, as well as the part number and desired quantity for each part. The machine serial number (machine number) is indicated on the machine name plate.

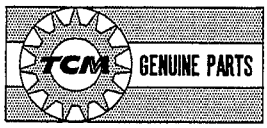

Always use "TCM's Genuine Parts". We cannot guarantee any loss or trouble attributable to other parts than ours.

How to use the Parts Catalogue

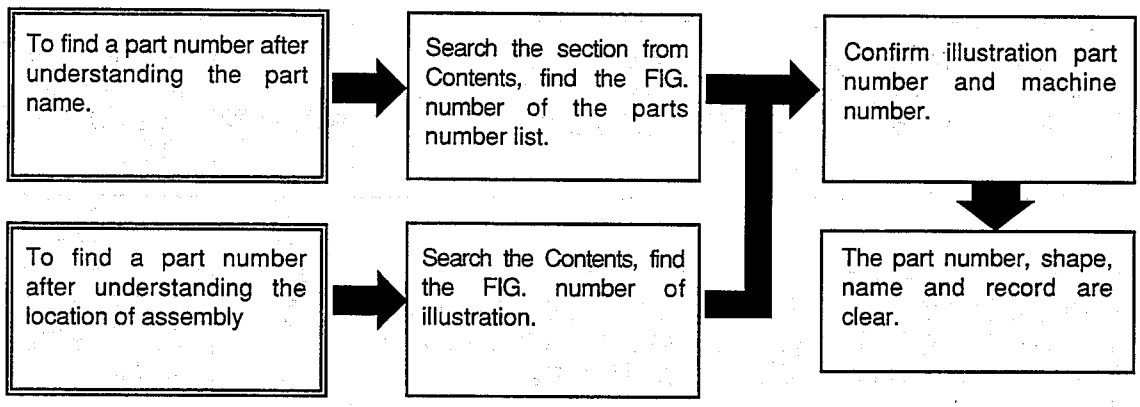

Abbreviations and symbols

ASSY ···	Assembled unit.
RH ·····	Right-hand when viewed forward on the truck.
LH ·····	Left-hand when viewed forward on the truck.
AR ·····	Quantity required.
* ·····	The marketable part set or kit.
T ·····	Thickness.
+ ·····	Not illustrated.
# ·····	Not sold separately.

Materals and specifications subject to change without notice.

CONTENTS 目次

SECTION 部門		2ton	3ton	FIG.NO.
[SS22B,SS23B,SS25B]				
SIDE SHIFT [SS22B,SS23B,SS25B]	ｻｲﾄﾞｼﾌﾄ	○		1
CYLINDER [SS22B,SS23B,SS25B]	ｼﾘﾝﾀﾞ	○		2
HYDRAULIC LINE (CONNECTOR-CYLINDER)	ﾊｲﾄﾞﾛﾘｯｸﾗｲﾝ (ｺﾈｸﾀｰｼﾘﾝﾀﾞ)	○		3
HYDRAULIC LINE (CONNECTOR-CYLINDER)[VFM,VFHM]	ﾊｲﾄﾞﾛﾘｯｸﾗｲﾝ (ｺﾈｸﾀｰｼﾘﾝﾀﾞ)	○		4
[SS2A8]				
SIDE SHIFT [SS2A8]	ｻｲﾄﾞｼﾌﾄ	○		5
CYLINDER [SS2A8]	ｼﾘﾝﾀﾞ	○		6
HYDRAULIC LINE (CONNECTOR-CYLINDER)	ﾊｲﾄﾞﾛﾘｯｸﾗｲﾝ (ｺﾈｸﾀｰｼﾘﾝﾀﾞ)	○		7
HYDRAULIC LINE (CONNECTOR-CYLINDER)[VFM,VFHM]	ﾊｲﾄﾞﾛﾘｯｸﾗｲﾝ (ｺﾈｸﾀｰｼﾘﾝﾀﾞ)	○		8
[SS28A,SS29A,SS31A]				
SIDE SHIFT [SS28A,SS29A,SS31A]	ｻｲﾄﾞｼﾌﾄ		○	9
CYLINDER [SS28A,SS29A,SS31A]	ｼﾘﾝﾀﾞ		○	10
HYDRAULIC LINE (CONNECTOR-CYLINDER)	ﾊｲﾄﾞﾛﾘｯｸﾗｲﾝ (ｺﾈｸﾀｰｼﾘﾝﾀﾞ)		○	11
HYDRAULIC LINE (CONNECTOR-CYLINDER)[VFM,VFHM]	ﾊｲﾄﾞﾛﾘｯｸﾗｲﾝ (ｺﾈｸﾀｰｼﾘﾝﾀﾞ)		○	12
[SS3A8]				
SIDE SHIFT [SS3A8]	ｻｲﾄﾞｼﾌﾄ		○	13
CYLINDER [SS3A8]	ｼﾘﾝﾀﾞ		○	14
HYDRAULIC LINE (CONNECTOR-CYLINDER)	ﾊｲﾄﾞﾛﾘｯｸﾗｲﾝ (ｺﾈｸﾀｰｼﾘﾝﾀﾞ)		○	15
HYDRAULIC LINE (CONNECTOR-CYLINDER)[VFM,VFHM]	ﾊｲﾄﾞﾛﾘｯｸﾗｲﾝ (ｺﾈｸﾀｰｼﾘﾝﾀﾞ)		○	16
[FS20A,FS22A,FS23A]				
FORK SHIFT [FS20A,FS22A,FS23A]	ﾌｫｰｸｼﾌﾄ	○		17
CYLINDER [FS20A,FS22A,FS23A]	ｼﾘﾝﾀﾞ	○		18
HYDRAULIC LINE (CONNECTOR-CYLINDER)	ﾊｲﾄﾞﾛﾘｯｸﾗｲﾝ (ｺﾈｸﾀｰｼﾘﾝﾀﾞ)	○		19
HYDRAULIC LINE (CONNECTOR-CYLINDER)[VM/SSV]	ﾊｲﾄﾞﾛﾘｯｸﾗｲﾝ (ｺﾈｸﾀｰｼﾘﾝﾀﾞ)	○		20
HYDRAULIC LINE (CONNECTOR-CYLINDER)[VFM]	ﾊｲﾄﾞﾛﾘｯｸﾗｲﾝ (ｺﾈｸﾀｰｼﾘﾝﾀﾞ)	○		21
HYDRAULIC LINE (CONNECTOR-CYLINDER)[VFHM]	ﾊｲﾄﾞﾛﾘｯｸﾗｲﾝ (ｺﾈｸﾀｰｼﾘﾝﾀﾞ)	○		22
JUNCTION BLOCK [FS22A,FS23A]	ｼﾞｬﾝｸｼｮﾝﾌﾞﾛｯｸ	○		23
[FS28A,FS29A,FS31A]				
FORK SHIFT [FS28A,FS29A,FS31A]	ﾌｫｰｸｼﾌﾄ		○	24
CYLINDER [FS28A,FS29A,FS31A]	ｼﾘﾝﾀﾞ		○	25
HYDRAULIC LINE (CONNECTOR-CYLINDER)	ﾊｲﾄﾞﾛﾘｯｸﾗｲﾝ (ｺﾈｸﾀｰｼﾘﾝﾀﾞ)		○	26
HYDRAULIC LINE (CONNECTOR-CYLINDER)[VM/SSV]	ﾊｲﾄﾞﾛﾘｯｸﾗｲﾝ (ｺﾈｸﾀｰｼﾘﾝﾀﾞ)		○	27
HYDRAULIC LINE (CONNECTOR-CYLINDER)[VFM]	ﾊｲﾄﾞﾛﾘｯｸﾗｲﾝ (ｺﾈｸﾀｰｼﾘﾝﾀﾞ)		○	28
HYDRAULIC LINE (CONNECTOR-CYLINDER)[VFHM]	ﾊｲﾄﾞﾛﾘｯｸﾗｲﾝ (ｺﾈｸﾀｰｼﾘﾝﾀﾞ)		○	29
JUNCTION BLOCK [FS28A,FS29A]	ｼﾞｬﾝｸｼｮﾝﾌﾞﾛｯｸ		○	30

CONTENTS 目次

SECTION 部門		2ton	3ton	FIG.NO.
[HF24A]				
HINGED FORK [HF24A]	ﾋﾝｼﾞﾄﾞﾌｫｰｸ	○		31
CYLINDER [HF24A]	ｼﾘﾝﾀﾞ	○		32
HYDRAULIC LINE (CONNECTOR-CYLINDER)	ﾊｲﾄﾞﾛﾘｯｸﾗｲﾝ (ｺﾈｸﾀｰｼﾘﾝﾀﾞ)	○		33
[HF21A,HF22A,HF23A]				
HINGED FORK [HF21A,HF22A,HF23A]	ﾋﾝｼﾞﾄﾞﾌｫｰｸ	○		34
CYLINDER [HF21A,HF22A,HF23A]	ｼﾘﾝﾀﾞ	○		35
HYDRAULIC LINE (CONNECTOR-CYLINDER)	ﾊｲﾄﾞﾛﾘｯｸﾗｲﾝ (ｺﾈｸﾀｰｼﾘﾝﾀﾞ)	○		36
HYDRAULIC LINE (CONNECTOR-CYLINDER)[VFM,VFHM]	ﾊｲﾄﾞﾛﾘｯｸﾗｲﾝ (ｺﾈｸﾀｰｼﾘﾝﾀﾞ)	○		37
[HF27A]				
HINGED FORK [HF27A]	ﾋﾝｼﾞﾄﾞﾌｫｰｸ		○	38
CYLINDER [HF27A]	ｼﾘﾝﾀﾞ		○	39
HYDRAULIC LINE (CONNECTOR-CYLINDER)	ﾊｲﾄﾞﾛﾘｯｸﾗｲﾝ (ｺﾈｸﾀｰｼﾘﾝﾀﾞ)		○	40
[HF31A]				
HINGED FORK [HF31A]	ﾋﾝｼﾞﾄﾞﾌｫｰｸ		○	41
CYLINDER [HF31A]	ｼﾘﾝﾀﾞ		○	42
HYDRAULIC LINE (CONNECTOR-CYLINDER)	ﾊｲﾄﾞﾛﾘｯｸﾗｲﾝ (ｺﾈｸﾀｰｼﾘﾝﾀﾞ)		○	43
[LG2A4,LG2B4,LG2C4,LG2D4,LG2E4,LG2F4,LG2G4,LG2H4]				
LOAD GRAB [LG2A4,LG2B4,LG2C4,LG2D4,LG2E4,LG2F4,LG2G4,LG2H4]	ﾛｰﾄﾞｸﾞﾗﾌﾞ	○		44
CYLINDER [LG2A4,LG2B4,LG2C4,LG2D4,LG2E4,LG2F4,LG2G4,LG2H4]	ｼﾘﾝﾀﾞ	○		45
HYDRAULIC LINE (CONNECTOR-CYLINDER)	ﾊｲﾄﾞﾛﾘｯｸﾗｲﾝ (ｺﾈｸﾀｰｼﾘﾝﾀﾞ)	○		46
HYDRAULIC LINE (CONNECTOR-CYLINDER)[4DK]	ﾊｲﾄﾞﾛﾘｯｸﾗｲﾝ (ｺﾈｸﾀｰｼﾘﾝﾀﾞ)	○		47
HYDRAULIC LINE (CONNECTOR-CYLINDER)[ACC]	ﾊｲﾄﾞﾛﾘｯｸﾗｲﾝ (ｺﾈｸﾀｰｼﾘﾝﾀﾞ)	○		48
HYDRAULIC LINE (CONNECTOR-CYLINDER)[ACC/4DK]	ﾊｲﾄﾞﾛﾘｯｸﾗｲﾝ (ｺﾈｸﾀｰｼﾘﾝﾀﾞ)	○		49
HYDRAULIC LINE (CONNECTOR-CYLINDER)[SSV]	ﾊｲﾄﾞﾛﾘｯｸﾗｲﾝ (ｺﾈｸﾀｰｼﾘﾝﾀﾞ)	○		50
HYDRAULIC LINE (CONNECTOR-CYLINDER)[SSV/4DK]	ﾊｲﾄﾞﾛﾘｯｸﾗｲﾝ (ｺﾈｸﾀｰｼﾘﾝﾀﾞ)	○		51
HYDRAULIC LINE (CONNECTOR-CYLINDER)[VFM,VFHM]	ﾊｲﾄﾞﾛﾘｯｸﾗｲﾝ (ｺﾈｸﾀｰｼﾘﾝﾀﾞ)	○		52
HYDRAULIC LINE (CONNECTOR-CYLINDER)[VFM/4DK][VFHM/4DK]	ﾊｲﾄﾞﾛﾘｯｸﾗｲﾝ (ｺﾈｸﾀｰｼﾘﾝﾀﾞ)	○		53
HYDRAULIC LINE (CONNECTOR-CYLINDER)[VFM/SSV][VFHM/SSV]	ﾊｲﾄﾞﾛﾘｯｸﾗｲﾝ (ｺﾈｸﾀｰｼﾘﾝﾀﾞ)	○		54
HYDRAULIC LINE (CONNECTOR-CYLINDER)[(VFM,VFHM)/SSV/4DK]	ﾊｲﾄﾞﾛﾘｯｸﾗｲﾝ (ｺﾈｸﾀｰｼﾘﾝﾀﾞ)	○		55

CONTENTS 目次

SECTION 部門		2ton	3ton	FIG.NO.
[LG3A4,LG3B4,LG3C4,LG3D4,LG3E4,LG3F4]				
LOAD GRAB [LG3A4,LG3B4,LG3C4,LG3D4,LG3E4,LG3F4]	ﾛｰﾄﾞｸﾞﾗﾌﾞ		○	56
CYLINDER [LG3A4,LG3B4,LG3C4,LG3D4,LG3E4,LG3F4]	ｼﾘﾝﾀﾞ		○	57
HYDRAULIC LINE (CONNECTOR-CYLINDER)	ﾊｲﾄﾞﾛﾘｯｸﾗｲﾝ (ｺﾈｸﾀｰｼﾘﾝﾀﾞ)		○	58
HYDRAULIC LINE (CONNECTOR-CYLINDER)[4DK]	ﾊｲﾄﾞﾛﾘｯｸﾗｲﾝ (ｺﾈｸﾀｰｼﾘﾝﾀﾞ)		○	59
HYDRAULIC LINE (CONNECTOR-CYLINDER)[ACC]	ﾊｲﾄﾞﾛﾘｯｸﾗｲﾝ (ｺﾈｸﾀｰｼﾘﾝﾀﾞ)		○	60
HYDRAULIC LINE (CONNECTOR-CYLINDER)[ACC/4DK]	ﾊｲﾄﾞﾛﾘｯｸﾗｲﾝ (ｺﾈｸﾀｰｼﾘﾝﾀﾞ)		○	61
HYDRAULIC LINE (CONNECTOR-CYLINDER)[SSV]	ﾊｲﾄﾞﾛﾘｯｸﾗｲﾝ (ｺﾈｸﾀｰｼﾘﾝﾀﾞ)		○	62
HYDRAULIC LINE (CONNECTOR-CYLINDER)[SSV/4DK]	ﾊｲﾄﾞﾛﾘｯｸﾗｲﾝ (ｺﾈｸﾀｰｼﾘﾝﾀﾞ)		○	63
HYDRAULIC LINE (CONNECTOR-CYLINDER)[VFM,VFHM]	ﾊｲﾄﾞﾛﾘｯｸﾗｲﾝ (ｺﾈｸﾀｰｼﾘﾝﾀﾞ)		○	64
HYDRAULIC LINE (CONNECTOR-CYLINDER)[(VFM,VFHM)/4DK]	ﾊｲﾄﾞﾛﾘｯｸﾗｲﾝ (ｺﾈｸﾀｰｼﾘﾝﾀﾞ)		○	65
HYDRAULIC LINE (CONNECTOR-CYLINDER)[(VFM,VFHM)/SSV]	ﾊｲﾄﾞﾛﾘｯｸﾗｲﾝ (ｺﾈｸﾀｰｼﾘﾝﾀﾞ)		○	66
HYDRAULIC LINE (CONNECTOR-CYLINDER)[SSV/4DK/(VFM,VFHM)]	ﾊｲﾄﾞﾛﾘｯｸﾗｲﾝ (ｺﾈｸﾀｰｼﾘﾝﾀﾞ)		○	67
[PR2A7,PR2B7,PR2C7,PR2D7,PR2E7,PR2F7]				
[PR3A7,PR3B7,PR3C7,PR3D7,PR3E7,PR3F7]				
ROTATING CLAMP [PR2A7,PR2C7,PR2E7]	ﾛｰﾃｰﾃｨﾝｸﾞｸﾗﾝﾌﾟ	○	○	68
ROTATING CLAMP [PR2B7,PR2D7,PR2F7]	ﾛｰﾃｰﾃｨﾝｸﾞｸﾗﾝﾌﾟ	○	○	69
CYLINDER [PR2A7-PR2F7,PR3A7-PR3F7]	ｼﾘﾝﾀﾞ	○	○	70
HYDRAULIC LINE (CONNECTOR-CYLINDER & MOTOR)	ﾊｲﾄﾞﾛﾘｯｸﾗｲﾝ (ｺﾈｸﾀｰｼﾘﾝﾀﾞ&ﾓｰﾀ)	○	○	71
HYDRAULIC LINE (CONNECTOR-CYL. & MOTOR)[4DK]	ﾊｲﾄﾞﾛﾘｯｸﾗｲﾝ (ｺﾈｸﾀｰｼﾘﾝﾀﾞ&ﾓｰﾀ)	○	○	72
HYDRAULIC LINE (CONNECTOR-CYL. & MOTOR)[VFM,VFHM]	ﾊｲﾄﾞﾛﾘｯｸﾗｲﾝ (ｺﾈｸﾀｰｼﾘﾝﾀﾞ&ﾓｰﾀ)	○	○	73
HYDRAULIC LINE (CONNECTOR-CYL. & MOTOR)[(VFM,VFHM)/4DK]	ﾊｲﾄﾞﾛﾘｯｸﾗｲﾝ (ｺﾈｸﾀｰｼﾘﾝﾀﾞ&ﾓｰﾀ)	○	○	74
ROTARY VALVE [PR2A7-PR2F7,PR3A7-PR3F7]	ﾛｰﾀﾘﾊﾞﾙﾌﾞ	○	○	75
JUNCTION BLOCK [VFM,VFHM]	ｼﾞｬﾝｸｼｮﾝﾌﾞﾛｯｸ	○	○	76
ROTATING DEVICE [PR2A7,PR2B7,PR2C7,PR2D7,PR2E7,PR2F7]	ﾛｰﾃｰﾃｨﾝｸﾞﾃﾞﾊﾞｲｽ	○	○	77
REDUCTION [PR2A7-PR2F7,PR3A7-PR3F7]	ﾘﾀﾞｸｼｮﾝ	○	○	78
ROTATING CLAMP [PR3A7,PR3C7,PR3E7]	ﾛｰﾃｰﾃｨﾝｸﾞｸﾗﾝﾌﾟ	○	○	79
ROTATING CLAMP [PR3B7,PR3D7,PR3F7]	ﾛｰﾃｰﾃｨﾝｸﾞｸﾗﾝﾌﾟ	○	○	80
HYDRAULIC LINE (CONNECTOR-CYLINDER & MOTOR)	ﾊｲﾄﾞﾛﾘｯｸﾗｲﾝ (ｺﾈｸﾀｰｼﾘﾝﾀﾞ&ﾓｰﾀ)	○	○	81
HYDRAULIC LINE (CONNECTOR-CYL. & MOTOR)[4DK]	ﾊｲﾄﾞﾛﾘｯｸﾗｲﾝ (ｺﾈｸﾀｰｼﾘﾝﾀﾞ&ﾓｰﾀ)	○	○	82
HYDRAULIC LINE (CONNECTOR-CYL. & MOTOR)[VFM,VFHM]	ﾊｲﾄﾞﾛﾘｯｸﾗｲﾝ (ｺﾈｸﾀｰｼﾘﾝﾀﾞ&ﾓｰﾀ)	○	○	83
HYDRAULIC LINE (CONNECTOR-CYL. & MOTOR)[(VFM,VFHM)/4DK]	ﾊｲﾄﾞﾛﾘｯｸﾗｲﾝ (ｺﾈｸﾀｰｼﾘﾝﾀﾞ&ﾓｰﾀ)	○	○	84
ROTATING DEVICE [PR3A7,PR3B7,PR3C7,PR3D7,PR3E7,PR3F7]	ﾛｰﾃｰﾃｨﾝｸﾞﾃﾞﾊﾞｲｽ	○	○	85
MOTOR [PR2A7-PR2F7,PR3A7-PR3F7]	ﾓｰﾀ	○	○	86

CONTENTS 目次

SECTION 部門		2ton	3ton	FIG.NO.
[PRX2A9,PRX2B9,PRX2C9,PRX2D9,PRX2E9,PRX2F9]				
[PRX3A9,PRX3B9,PRX3C9,PRX3D9,PRX3E9,PRX3F9]				
ROTATING CLAMP [PRX2A9,PRX2C9,PRX2E9]	ﾛｰﾃｰﾃｨﾝｸﾞｸﾗﾝﾌﾟ	○	○	87
ROTATING CLAMP [PRX2B9,PRX2D9,PRX2F9]	ﾛｰﾃｰﾃｨﾝｸﾞｸﾗﾝﾌﾟ	○	○	88
CYLINDER [PRX2A9-PRX2F9,PRX3A9-PRX3F9]	ｼﾘﾝﾀﾞ	○	○	89
HYDRAULIC LINE (CONNECTOR-CYLINDER & MOTOR)	ﾊｲﾄﾞﾛﾘｯｸﾗｲﾝ (ｺﾈｸﾀｰｼﾘﾝﾀﾞ&ﾓｰﾀ)	○	○	90
ROTARY VALVE [PRX2A9-PRX2F9,PRX3A9-PRX3F9]	ﾛｰﾀﾘﾊﾞﾙﾌﾞ	○	○	91
ROTATING DEVICE [PRX2A9,PRX2B9,PRX2C9,PRX2D9,PRX2E9,PRX2F9]	ﾛｰﾃｰﾃｨﾝｸﾞﾃﾞﾊﾞｲｽ	○	○	92
REDUCTION [PRX2A9-PRX2F9,PRX3A9-PRX3F9]	ﾘﾀﾞｸｼｮﾝ	○	○	93
ROTATING CLAMP [PRX3A9,PRX3C9,PRX3E9]	ﾛｰﾃｰﾃｨﾝｸﾞｸﾗﾝﾌﾟ	○	○	94
ROTATING CLAMP [PRX3B9,PRX3D9,PRX3F9]	ﾛｰﾃｰﾃｨﾝｸﾞｸﾗﾝﾌﾟ	○	○	95
HYDRAULIC LINE (CONNECTOR-CYLINDER & MOTOR)	ﾊｲﾄﾞﾛﾘｯｸﾗｲﾝ (ｺﾈｸﾀｰｼﾘﾝﾀﾞ&ﾓｰﾀ)	○	○	96
ROTATING DEVICE [PRX3A9,PRX3B9,PRX3C9,PRX3D9,PRX3E9,PRX3F9]	ﾛｰﾃｰﾃｨﾝｸﾞﾃﾞﾊﾞｲｽ	○	○	97
[RF206]				
ROTATING FORK [RF206]	ﾛｰﾃｰﾃｨﾝｸﾞﾌｫｰｸ	○		98
[RFX208]				
ROTATING FORK [RFX208]	ﾛｰﾃｰﾃｨﾝｸﾞﾌｫｰｸ	○		99
[RF317]				
ROTATING FORK [RF317]	ﾛｰﾃｰﾃｨﾝｸﾞﾌｫｰｸ		○	100
[RFX319]				
ROTATING FORK [RFX319]	ﾛｰﾃｰﾃｨﾝｸﾞﾌｫｰｸ		○	101
[RD206]				
ROTATING DEVICE [RD206]	ﾛｰﾃｰﾃｨﾝｸﾞﾃﾞﾊﾞｲｽ	○		102
REDUCTION [RD206]	ﾘﾀﾞｸｼｮﾝ	○		103
HYDRAULIC LINE (CONNECTOR-MOTOR)	ﾊｲﾄﾞﾛﾘｯｸﾗｲﾝ (ｺﾈｸﾀｰﾓｰﾀ)	○		104
HYDRAULIC LINE (CONNECTOR-MOTOR)[VM/4DK]	ﾊｲﾄﾞﾛﾘｯｸﾗｲﾝ (ｺﾈｸﾀｰﾓｰﾀ)	○		105
HYDRAULIC LINE (CONNECTOR-MOTOR)[VFM,VFHM]	ﾊｲﾄﾞﾛﾘｯｸﾗｲﾝ (ｺﾈｸﾀｰﾓｰﾀ)	○		106
HYDRAULIC LINE (CONNECTOR-MOTOR)[VFM/4DK,VFHM/4DK]	ﾊｲﾄﾞﾛﾘｯｸﾗｲﾝ (ｺﾈｸﾀｰﾓｰﾀ)	○		107
HYDRAULIC LINE (CONNECTOR-MOTOR)[VFM/A4R,VFHM/A4R]	ﾊｲﾄﾞﾛﾘｯｸﾗｲﾝ (ｺﾈｸﾀｰﾓｰﾀ)	○		108
HYDRAULIC LINE (CONNECTOR-MOTOR)[VFM/A4R/4DK,VFHM/A4R/4DK]	ﾊｲﾄﾞﾛﾘｯｸﾗｲﾝ (ｺﾈｸﾀｰﾓｰﾀ)	○		109
JUNCTION BLOCK [RD206]	ｼﾞｬﾝｸｼｮﾝﾌﾞﾛｯｸ	○		110
MOTOR[RD206]	ﾓｰﾀ	○		111

CONTENTS 目次

SECTION 部門		2ton	3ton	FIG.NO.
[RD21C]				
ROTATING DEVICE [RD21C]	ローテーティングデバイス	○		112
REDUCTION [RD21C]	リダクション	○		113
HYDRAULIC LINE (CONNECTOR-MOTOR)	ハイドロリックライン (コネクターモータ)	○		114
MOTOR[RD21C]	モータ	○		115
[RD306]				
ROTATING DEVICE [RD306]	ローテーティングデバイス		○	116
REDUCTION [RD306]	リダクション		○	117
HYDRAULIC LINE (CONNECTOR-MOTOR)	ハイドロリックライン (コネクターモータ)		○	118
HYDRAULIC LINE (CONNECTOR-MOTOR)[VM/4DK]	ハイドロリックライン (コネクターモータ)		○	119
HYDRAULIC LINE (CONNECTOR-MOTOR)[VFM,VFHM]	ハイドロリックライン (コネクターモータ)		○	120
HYDRAULIC LINE (CONNECTOR-MOTOR)[VFM/4DK,VFHM/4DK]]	ハイドロリックライン (コネクターモータ)		○	121
HYDRAULIC LINE (CONNECTOR-MOTOR)[VFM/A4R,VFHM/A4R]	ハイドロリックライン (コネクターモータ)		○	122
HYDRAULIC LINE (CONNECTOR-MOTOR)[VFM/A4R/4DK,VFHM/A4R/4DK]	ハイドロリックライン (コネクターモータ)		○	123
JUNCTION BLOCK [RD306]	ジャンクションブロック		○	124
MOTOR[RD306]	モータ		○	125
[RD31C]				
ROTATING DEVICE [RD31C]	ローテーティングデバイス		○	126
REDUCTION [RD31C]	リダクション		○	127
HYDRAULIC LINE (CONNECTOR-MOTOR)	ハイドロリックライン (コネクターモータ)		○	128
MOTOR[RD31C]	モータ		○	129
[AP021F](VM)				
HYDRAULIC LINE (CONTROL VALVE-CONNECTOR)	ハイドロリックライン (コントロールバルブ-コネクタ)	○		130
HYDRAULIC LINE (CONTROL VALVE-CONNECTOR)[AP4,4AP]	ハイドロリックライン (コントロールバルブ-コネクタ)	○		131
HYDRAULIC LINE (CONTROL VALVE-CONNECTOR)[AP5,5AP]	ハイドロリックライン (コントロールバルブ-コネクタ)	○		132
HYDRAULIC LINE (CONTROL VALVE-CONNECTOR)[4AP,HFW]	ハイドロリックライン (コントロールバルブ-コネクタ)	○		133
HYDRAULIC LINE (CONTROL VALVE-CONNECTOR)[4AP,PPC]	ハイドロリックライン (コントロールバルブ-コネクタ)	○		134
HYDRAULIC LINE (CONTROL VALVE-CONNECTOR)[ACC,PR]	ハイドロリックライン (コントロールバルブ-コネクタ)	○		135
HYDRAULIC LINE (CONTROL VALVE-CONNECTOR)[ACC,LG]	ハイドロリックライン (コントロールバルブ-コネクタ)	○		136
HYDRAULIC LINE (RELIEF VALVE)[VRV]	ハイドロリックライン (リリーフバルブ)	○		137

CONTENTS 目次

SECTION 部門		2ton	3ton	FIG.NO.
[AP121F](VFM)				
HYDRAULIC LINE (CONTROL VALVE-CONNECTOR)	ﾊｲﾄﾞﾛﾘｯｸﾗｲﾝ (ｺﾝﾄﾛｰﾙﾊﾞﾙﾌﾞｰｺﾈｸﾀ)	○		138
HYDRAULIC LINE (CONT. VALVE-CONNECTOR)[AR4,ARD,4AP]	ﾊｲﾄﾞﾛﾘｯｸﾗｲﾝ (ｺﾝﾄﾛｰﾙﾊﾞﾙﾌﾞｰｺﾈｸﾀ)	○		139
HYDRAULIC LINE (CONT. VALVE-CONNECTOR)[AR5,5AP,ARE]	ﾊｲﾄﾞﾛﾘｯｸﾗｲﾝ (ｺﾝﾄﾛｰﾙﾊﾞﾙﾌﾞｰｺﾈｸﾀ)	○		140
HYDRAULIC LINE (CONTROL VALVE-CONNECTOR)[A3R,A3S]	ﾊｲﾄﾞﾛﾘｯｸﾗｲﾝ (ｺﾝﾄﾛｰﾙﾊﾞﾙﾌﾞｰｺﾈｸﾀ)	○		141
HYDRAULIC LINE (CONTROL VALVE-CONNECTOR)[A4R,A4S]	ﾊｲﾄﾞﾛﾘｯｸﾗｲﾝ (ｺﾝﾄﾛｰﾙﾊﾞﾙﾌﾞｰｺﾈｸﾀ)	○		142
HYDRAULIC LINE (RELIEF VALVE)[VRV]	ﾊｲﾄﾞﾛﾘｯｸﾗｲﾝ (ﾘﾘｰﾌﾊﾞﾙﾌﾞ)	○		143
LAMP BRACKET [AP121F]	ﾗﾝﾌﾟﾌﾞﾗｹｯﾄ	○		144
LAMP BKT.[AP121F/(AR4,AR5,4AP,5AP,ARD,ARE,A3R,A4R,A3S,A4S)]	ﾗﾝﾌﾟﾌﾞﾗｹｯﾄ	○		145
LAMP BKT.[AP121F/HL][AP121F/HL/(4AP,5AP,A3R,A4R,AR4,AR5)]	ﾗﾝﾌﾟﾌﾞﾗｹｯﾄ	○		146
LAMP BKT.[AP121F/BKH][AP121F/BKH/(4AP,5AP,A3R,A4R,AR4,AR5)]	ﾗﾝﾌﾟﾌﾞﾗｹｯﾄ	○		147
LAMP BKT.[AP121F/HLG][AP121F/HLG/(4AP,5AP,A3R,A4R,AR4,AR5)]	ﾗﾝﾌﾟﾌﾞﾗｹｯﾄ	○		148
[AP221F](VFHM)				
HYDRAULIC LINE (CONTROL VALVE-CONNECTOR)	ﾊｲﾄﾞﾛﾘｯｸﾗｲﾝ (ｺﾝﾄﾛｰﾙﾊﾞﾙﾌﾞｰｺﾈｸﾀ)	○		149
HYDRAULIC LINE (CONT. VALVE-CONNECTOR)[AR4,4AP,ARD]	ﾊｲﾄﾞﾛﾘｯｸﾗｲﾝ (ｺﾝﾄﾛｰﾙﾊﾞﾙﾌﾞｰｺﾈｸﾀ)	○		150
HYDRAULIC LINE (CONT. VALVE-CONNECTOR)[AR5,5AP,ARE]	ﾊｲﾄﾞﾛﾘｯｸﾗｲﾝ (ｺﾝﾄﾛｰﾙﾊﾞﾙﾌﾞｰｺﾈｸﾀ)	○		151
HYDRAULIC LINE (CONTROL VALVE-CONNECTOR)[A3R,A3S]	ﾊｲﾄﾞﾛﾘｯｸﾗｲﾝ (ｺﾝﾄﾛｰﾙﾊﾞﾙﾌﾞｰｺﾈｸﾀ)	○		152
HYDRAULIC LINE (CONTROL VALVE-CONNECTOR)[A4R,A4S]	ﾊｲﾄﾞﾛﾘｯｸﾗｲﾝ (ｺﾝﾄﾛｰﾙﾊﾞﾙﾌﾞｰｺﾈｸﾀ)	○		153
HYDRAULIC LINE (RELIEF VALVE)[VRV]	ﾊｲﾄﾞﾛﾘｯｸﾗｲﾝ (ﾘﾘｰﾌﾊﾞﾙﾌﾞ)	○		154
LAMP BRACKET [AP221F]	ﾗﾝﾌﾟﾌﾞﾗｹｯﾄ	○		155
LAMP BKT.[AP221F/(AR4,AR5,4AP,5AP,ARD,ARE,A3R,A4R,A3S,A4S)]	ﾗﾝﾌﾟﾌﾞﾗｹｯﾄ	○		156
LAMP BRACKET [AP221F/HL][AP221F/HL/(4AP,5AP,AR4,AR5)]	ﾗﾝﾌﾟﾌﾞﾗｹｯﾄ	○		157
LAMP BRACKET [AP221F/BKH][AP221F/BKH/(4AP,5AP,AR4,AR5)]	ﾗﾝﾌﾟﾌﾞﾗｹｯﾄ	○		158
LAMP BKT.[AP221F/HLG][AP221F/HLG/(4AP,5AP,A3R,A4R,AR4,AR5)]	ﾗﾝﾌﾟﾌﾞﾗｹｯﾄ	○		159
[AP031F](VM)				
HYDRAULIC LINE (CONTROL VALVE-CONNECTOR)	ﾊｲﾄﾞﾛﾘｯｸﾗｲﾝ (ｺﾝﾄﾛｰﾙﾊﾞﾙﾌﾞｰｺﾈｸﾀ)		○	160
HYDRAULIC LINE (CONTROL VALVE-CONNECTOR)[AP4,4AP]	ﾊｲﾄﾞﾛﾘｯｸﾗｲﾝ (ｺﾝﾄﾛｰﾙﾊﾞﾙﾌﾞｰｺﾈｸﾀ)		○	161
HYDRAULIC LINE (CONTROL VALVE-CONNECTOR)[AP5,5AP]	ﾊｲﾄﾞﾛﾘｯｸﾗｲﾝ (ｺﾝﾄﾛｰﾙﾊﾞﾙﾌﾞｰｺﾈｸﾀ)		○	162
HYDRAULIC LINE (CONTROL VALVE-CONNECTOR)[4AP,HFW]	ﾊｲﾄﾞﾛﾘｯｸﾗｲﾝ (ｺﾝﾄﾛｰﾙﾊﾞﾙﾌﾞｰｺﾈｸﾀ)		○	163
HYDRAULIC LINE (CONTROL VALVE-CONNECTOR)[4AP,PPC)	ﾊｲﾄﾞﾛﾘｯｸﾗｲﾝ (ｺﾝﾄﾛｰﾙﾊﾞﾙﾌﾞｰｺﾈｸﾀ)		○	164
HYDRAULIC LINE (CONTROL VALVE-CONNECTOR)[ACC,PR]	ﾊｲﾄﾞﾛﾘｯｸﾗｲﾝ (ｺﾝﾄﾛｰﾙﾊﾞﾙﾌﾞｰｺﾈｸﾀ)		○	165
HYDRAULIC LINE (CONTROL VALVE-CONNECTOR)[ACC,LG]	ﾊｲﾄﾞﾛﾘｯｸﾗｲﾝ (ｺﾝﾄﾛｰﾙﾊﾞﾙﾌﾞｰｺﾈｸﾀ)		○	166
HYDRAULIC LINE (RELIEF VALVE)[VRV]	ﾊｲﾄﾞﾛﾘｯｸﾗｲﾝ (ﾘﾘｰﾌﾊﾞﾙﾌﾞ)		○	167

CONTENTS 目次

SECTION 部門		2ton	3ton	FIG. NO.
[AP131F](VFM)				
HYDRAULIC LINE (CONTROL VALVE-CONNECTOR)	ﾊｲﾄﾞﾛﾘｯｸﾗｲﾝ (ｺﾝﾄﾛｰﾙﾊﾞﾙﾌﾞｰｺﾈｸﾀ)		○	168
HYDRAULIC LINE (CONT. VALVE-CONNECTOR)[AR4,ARD,4AP]	ﾊｲﾄﾞﾛﾘｯｸﾗｲﾝ (ｺﾝﾄﾛｰﾙﾊﾞﾙﾌﾞｰｺﾈｸﾀ)		○	169
HYDRAULIC LINE (CONT. VALVE-CONNECTOR)[AR5,5AP,ARE]	ﾊｲﾄﾞﾛﾘｯｸﾗｲﾝ (ｺﾝﾄﾛｰﾙﾊﾞﾙﾌﾞｰｺﾈｸﾀ)		○	170
HYDRAULIC LINE (CONTROL VALVE-CONNECTOR)[A3R,A3S]	ﾊｲﾄﾞﾛﾘｯｸﾗｲﾝ (ｺﾝﾄﾛｰﾙﾊﾞﾙﾌﾞｰｺﾈｸﾀ)		○	171
HYDRAULIC LINE (CONTROL VALVE-CONNECTOR)[A4R,A4S]	ﾊｲﾄﾞﾛﾘｯｸﾗｲﾝ (ｺﾝﾄﾛｰﾙﾊﾞﾙﾌﾞｰｺﾈｸﾀ)		○	172
HYDRAULIC LINE (RELIEF VALVE)[VRV]	ﾊｲﾄﾞﾛﾘｯｸﾗｲﾝ (ﾘﾘｰﾌﾊﾞﾙﾌﾞ)		○	173
LAMP BRACKET [AP131F]	ﾗﾝﾌﾟﾌﾞﾗｹｯﾄ		○	174
LAMP BKT.[AP131F/(AR4,AR5,4AP,5AP,ARD,ARE,A3R,A4R,A3S,A4S)]	ﾗﾝﾌﾟﾌﾞﾗｹｯﾄ		○	175
LAMP BKT.[AP131F/HL][AP131F/HL/(4AP,5AP,A3R,A4R,AR4,AR5)]	ﾗﾝﾌﾟﾌﾞﾗｹｯﾄ		○	176
LAMP BKT.[AP131F/BKH][AP131F/BKH/(4AP,5AP,A3R,A4R,AR4,AR5)]	ﾗﾝﾌﾟﾌﾞﾗｹｯﾄ		○	177
LAMP BKT.[AP131F/HLG][AP131F/HLG/(4AP,5AP,A3R,A4R,AR4,AR5)]	ﾗﾝﾌﾟﾌﾞﾗｹｯﾄ		○	178
[AP231F](VFHM)				
HYDRAULIC LINE (CONTROL VALVE-CONNECTOR)	ﾊｲﾄﾞﾛﾘｯｸﾗｲﾝ (ｺﾝﾄﾛｰﾙﾊﾞﾙﾌﾞｰｺﾈｸﾀ)		○	179
HYDRAULIC LINE (CONT. VALVE-CONNECTOR)[\AR4,4AP,ARD]	ﾊｲﾄﾞﾛﾘｯｸﾗｲﾝ (ｺﾝﾄﾛｰﾙﾊﾞﾙﾌﾞｰｺﾈｸﾀ)		○	180
HYDRAULIC LINE (CONT. VALVE-CONNECTOR)[(AR5,5AP,ARE]	ﾊｲﾄﾞﾛﾘｯｸﾗｲﾝ (ｺﾝﾄﾛｰﾙﾊﾞﾙﾌﾞｰｺﾈｸﾀ)		○	181
HYDRAULIC LINE (CONTROL VALVE-CONNECTOR)[A3R,A3S]	ﾊｲﾄﾞﾛﾘｯｸﾗｲﾝ (ｺﾝﾄﾛｰﾙﾊﾞﾙﾌﾞｰｺﾈｸﾀ)		○	182
HYDRAULIC LINE (CONTROL VALVE-CONNECTOR)[A4R,A4S]	ﾊｲﾄﾞﾛﾘｯｸﾗｲﾝ (ｺﾝﾄﾛｰﾙﾊﾞﾙﾌﾞｰｺﾈｸﾀ)		○	183
HYDRAULIC LINE (RELIEF VALVE)[VRV]	ﾊｲﾄﾞﾛﾘｯｸﾗｲﾝ (ﾘﾘｰﾌﾊﾞﾙﾌﾞ)		○	184
LAMP BRACKET [AP231F]	ﾗﾝﾌﾟﾌﾞﾗｹｯﾄ		○	185
LAMP BKT.[AP231F/(AR4,AR5,4AP,5AP,ARD,ARE,A3R,A4R,A3S,A4S)]	ﾗﾝﾌﾟﾌﾞﾗｹｯﾄ		○	186
LAMP BRACKET [AP231F/HL][AP231F/HL/(4AP,5AP,AR4,AR5)]	ﾗﾝﾌﾟﾌﾞﾗｹｯﾄ		○	187
LAMP BRACKET [AP231F/BKH][AP231F/BKH/(4AP,5AP,AR4,AR5)]	ﾗﾝﾌﾟﾌﾞﾗｹｯﾄ		○	188
LAMP BKT.[AP231F/HLG][AP231F/HLG/(4AP,5AP,A3R,A4R,AR4,AR5)]	ﾗﾝﾌﾟﾌﾞﾗｹｯﾄ		○	189

FIG.1 SIDE SHIFT [SS22B,SS23B,SS25B]

(A502SS10) サイドシフト

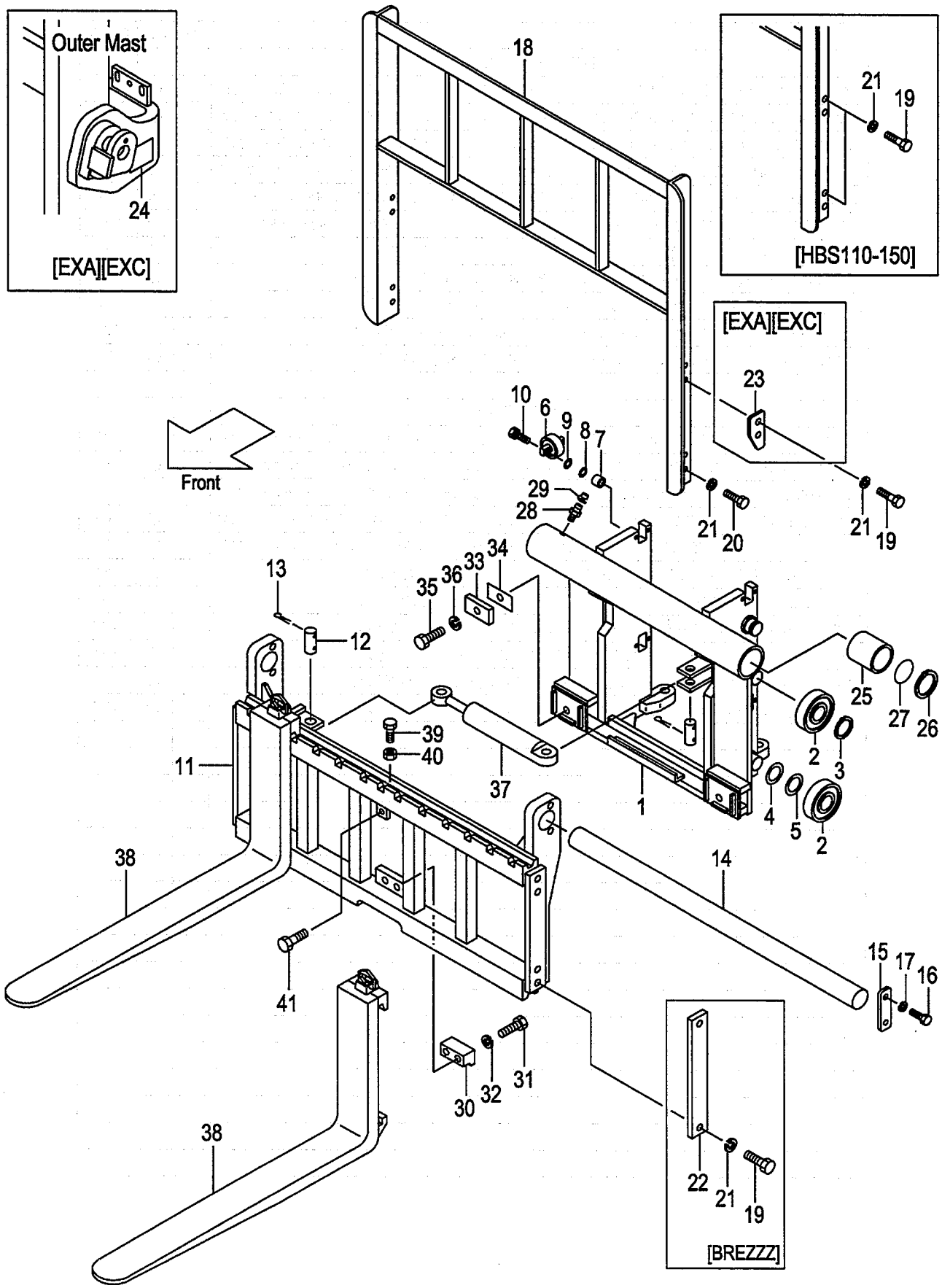

A:SS25B(VM/J)
B:SS22B(VFM/J)
C:SS23B(VFHM/J)

FIG.1
(A502SS10)

Item No	Part No.	Mark	Description		Req'd	Remarks : Serial No.
A1	625B6-10001		SHIFT-ASSY,SIDE	ｻｲﾄﾞｼﾌﾄｱｯｾﾝ	1	A INC.1-37
-	625B6-10011		SHIFT-ASSY,SIDE	ｻｲﾄﾞｼﾌﾄｱｯｾﾝ	1	A [BREZZZ] INC.1-37
-	625B6-10021		SHIFT-ASSY,SIDE	ｻｲﾄﾞｼﾌﾄｱｯｾﾝ	1	A [WFS] INC.1-37
-	625B6-10031		SHIFT-ASSY,SIDE	ｻｲﾄﾞｼﾌﾄｱｯｾﾝ	1	A [WFS/BREZZZ] INC.1-37
-	625B6-10041		SHIFT-ASSY,SIDE	ｻｲﾄﾞｼﾌﾄｱｯｾﾝ	1	A [WWS] INC.1-37
-	625B6-10051		SHIFT-ASSY,SIDE	ｻｲﾄﾞｼﾌﾄｱｯｾﾝ	1	A [WWS/BREZZZ] INC.1-37
-	625B6-10301		SHIFT-ASSY,SIDE	ｻｲﾄﾞｼﾌﾄｱｯｾﾝ	1	A [FC][CS35][FCS35][FCS45] [FCS55] INC.1-37
-	625B6-10311		SHIFT-ASSY,SIDE	ｻｲﾄﾞｼﾌﾄｱｯｾﾝ	1	A [(FC,CS35,FCS35,45,55) /BREZZZ] INC.1-37
-	625B6-10321		SHIFT-ASSY,SIDE	ｻｲﾄﾞｼﾌﾄｱｯｾﾝ	1	A [(FC,CS35,FCS35,45,55) /WFS] INC.1-37
-	625B6-10331		SHIFT-ASSY,SIDE	ｻｲﾄﾞｼﾌﾄｱｯｾﾝ	1	A [(FC,CS35,FCS35,45,55) /WFS/BREZZZ] INC.1-37
-	625B6-10341		SHIFT-ASSY,SIDE	ｻｲﾄﾞｼﾌﾄｱｯｾﾝ	1	A [(FC,CS35,FCS35,45,55) /WWS] INC.1-37
-	625B6-10351		SHIFT-ASSY,SIDE	ｻｲﾄﾞｼﾌﾄｱｯｾﾝ	1	A [(FC,CS35,FCS35,45,55) /WWS/BREZZZ] INC.1-37
-	622B6-10001		SHIFT-ASSY,SIDE	ｻｲﾄﾞｼﾌﾄｱｯｾﾝ	1	B INC.1-37
-	622B6-10011		SHIFT-ASSY,SIDE	ｻｲﾄﾞｼﾌﾄｱｯｾﾝ	1	B [BREZZZ] INC.1-37
-	622B6-10021		SHIFT-ASSY,SIDE	ｻｲﾄﾞｼﾌﾄｱｯｾﾝ	1	B [WFS] INC.1-37
-	622B6-10031		SHIFT-ASSY,SIDE	ｻｲﾄﾞｼﾌﾄｱｯｾﾝ	1	B [WFS/BREZZZ] INC.1-37
-	622B6-10041		SHIFT-ASSY,SIDE	ｻｲﾄﾞｼﾌﾄｱｯｾﾝ	1	B [WWS] INC.1-37
-	622B6-10051		SHIFT-ASSY,SIDE	ｻｲﾄﾞｼﾌﾄｱｯｾﾝ	1	B [WWS/BREZZZ] INC.1-37
-	622B6-10301		SHIFT-ASSY,SIDE	ｻｲﾄﾞｼﾌﾄｱｯｾﾝ	1	B [FC][CS35][FCS35][FCS45] [FCS55] INC.1-37
-	622B6-10311		SHIFT-ASSY,SIDE	ｻｲﾄﾞｼﾌﾄｱｯｾﾝ	1	B [(FC,CS35,FCS35,45,55) /BREZZZ] INC.1-37

FIG.1 SIDE SHIFT [SS22B,SS23B,SS25B]

(A502SS10) サイドシフト

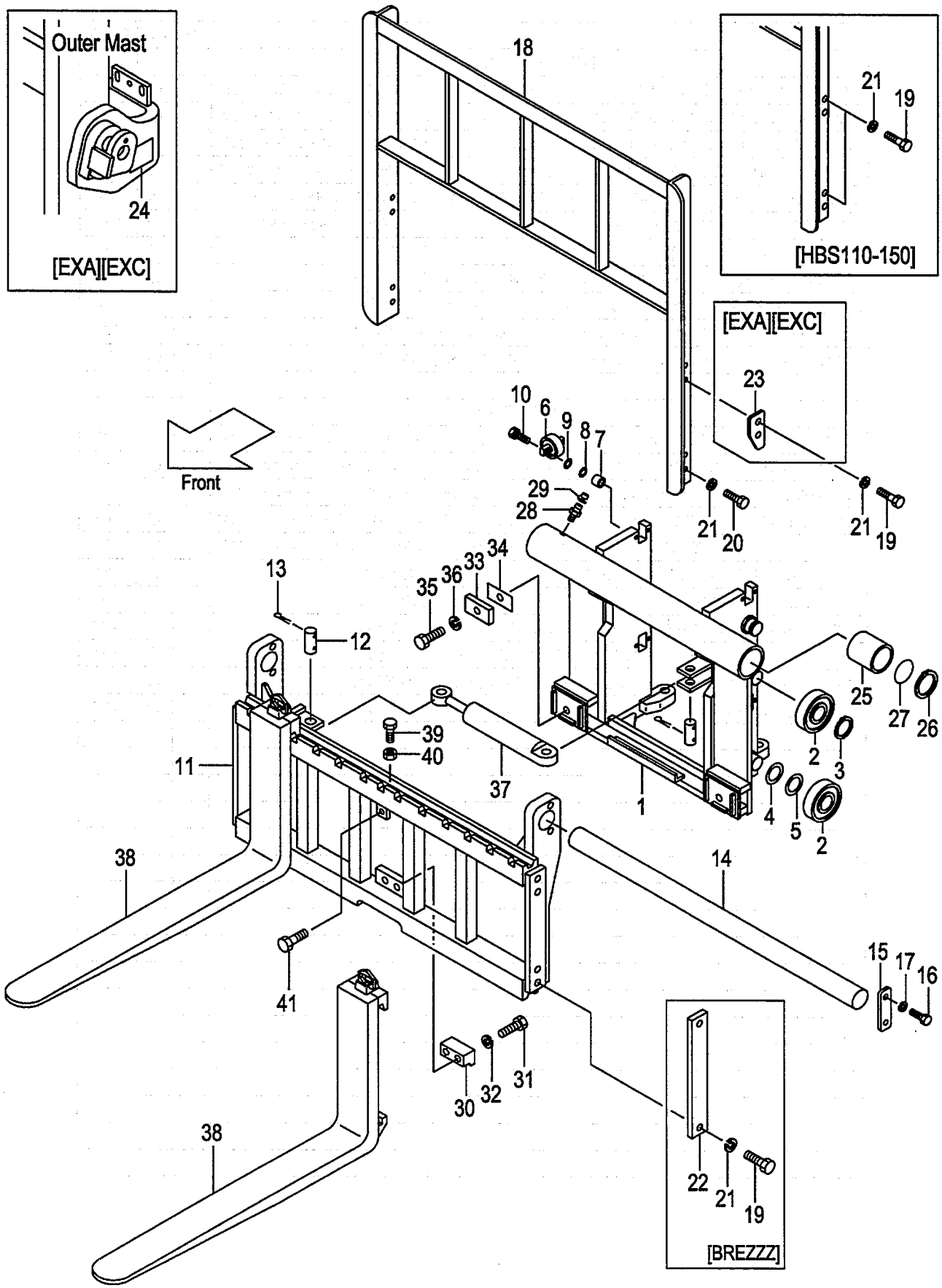

A:SS25B(VM/J)
B:SS22B(VFM/J)
C:SS23B(VFHM/J)

FIG.1
(A502SS10)

Item No	Part No.	Mark	Description		Req'd	Remarks : Serial No.
-	622B6-10321		SHIFT-ASSY,SIDE	ｻｲﾄﾞｼﾌﾄｱｯｾﾝ	1	B [(FC,CS35,FCS35,45,55) /WFS] INC.1-37
-	622B6-10331		SHIFT-ASSY,SIDE	ｻｲﾄﾞｼﾌﾄｱｯｾﾝ	1	B [(FC,CS35,FCS35,45,55) /WFS/BREZZZ] INC.1-37
-	622B6-10341		SHIFT-ASSY,SIDE	ｻｲﾄﾞｼﾌﾄｱｯｾﾝ	1	B [(FC,CS35,FCS35,45,55) /WWS] INC.1-37
-	622B6-10351		SHIFT-ASSY,SIDE	ｻｲﾄﾞｼﾌﾄｱｯｾﾝ	1	B [(FC,CS35,FCS35,45,55) /WWS/BREZZZ] INC.1-37
-	623B6-10001		SHIFT-ASSY,SIDE	ｻｲﾄﾞｼﾌﾄｱｯｾﾝ	1	C INC.1-37
-	623B6-10011		SHIFT-ASSY,SIDE	ｻｲﾄﾞｼﾌﾄｱｯｾﾝ	1	C [BREZZZ] INC.1-37
-	623B6-10021		SHIFT-ASSY,SIDE	ｻｲﾄﾞｼﾌﾄｱｯｾﾝ	1	C [WFS] INC.1-37
-	623B6-10031		SHIFT-ASSY,SIDE	ｻｲﾄﾞｼﾌﾄｱｯｾﾝ	1	C [WFS/BREZZZ] INC.1-37
-	623B6-10041		SHIFT-ASSY,SIDE	ｻｲﾄﾞｼﾌﾄｱｯｾﾝ	1	C [WWS] INC.1-37
-	623B6-10051		SHIFT-ASSY,SIDE	ｻｲﾄﾞｼﾌﾄｱｯｾﾝ	1	C [WWS/BREZZZ] INC.1-37
-	623B6-10301		SHIFT-ASSY,SIDE	ｻｲﾄﾞｼﾌﾄｱｯｾﾝ	1	C [FC][CS35][FCS35][FCS45] [FCS55] INC.1-37
-	623B6-10311		SHIFT-ASSY,SIDE	ｻｲﾄﾞｼﾌﾄｱｯｾﾝ	1	C [(FC,CS35,FCS35,45,55) /BREZZZ] INC.1-37
-	623B6-10321		SHIFT-ASSY,SIDE	ｻｲﾄﾞｼﾌﾄｱｯｾﾝ	1	C [(FC,CS35,FCS35,45,55) /WFS] INC.1-37
-	623B6-10331		SHIFT-ASSY,SIDE	ｻｲﾄﾞｼﾌﾄｱｯｾﾝ	1	C [(FC,CS35,FCS35,45,55) /WFS/BREZZZ] INC.1-37
-	623B6-10341		SHIFT-ASSY,SIDE	ｻｲﾄﾞｼﾌﾄｱｯｾﾝ	1	C [(FC,CS35,FCS35,45,55) /WWS] INC.1-37
-	623B6-10351		SHIFT-ASSY,SIDE	ｻｲﾄﾞｼﾌﾄｱｯｾﾝ	1	C [(FC,CS35,FCS35,45,55) /WWS/BREZZZ] INC.1-37
1	625B6-10101		BRACKET,LIFT	ﾌﾞﾗｹｯﾄ	1	A
-	62286-10101		BRACKET,LIFT	ﾌﾞﾗｹｯﾄ	1	B
-	62386-10101		BRACKET,LIFT	ﾌﾞﾗｹｯﾄ	1	C
2	277P8-22051		ROLLER,END,119	ﾛｰﾗ	6	A,B
-	277P8-22051		ROLLER,END,119	ﾛｰﾗ	4	C
-	577P3-74001		ROLLER,END,119	ﾛｰﾗ	6	A,B [FC][CS35][FCS35][FCS45] [FCS55]

FIG.1 SIDE SHIFT [SS22B,SS23B,SS25B]

(A502SS10) サイドシフト

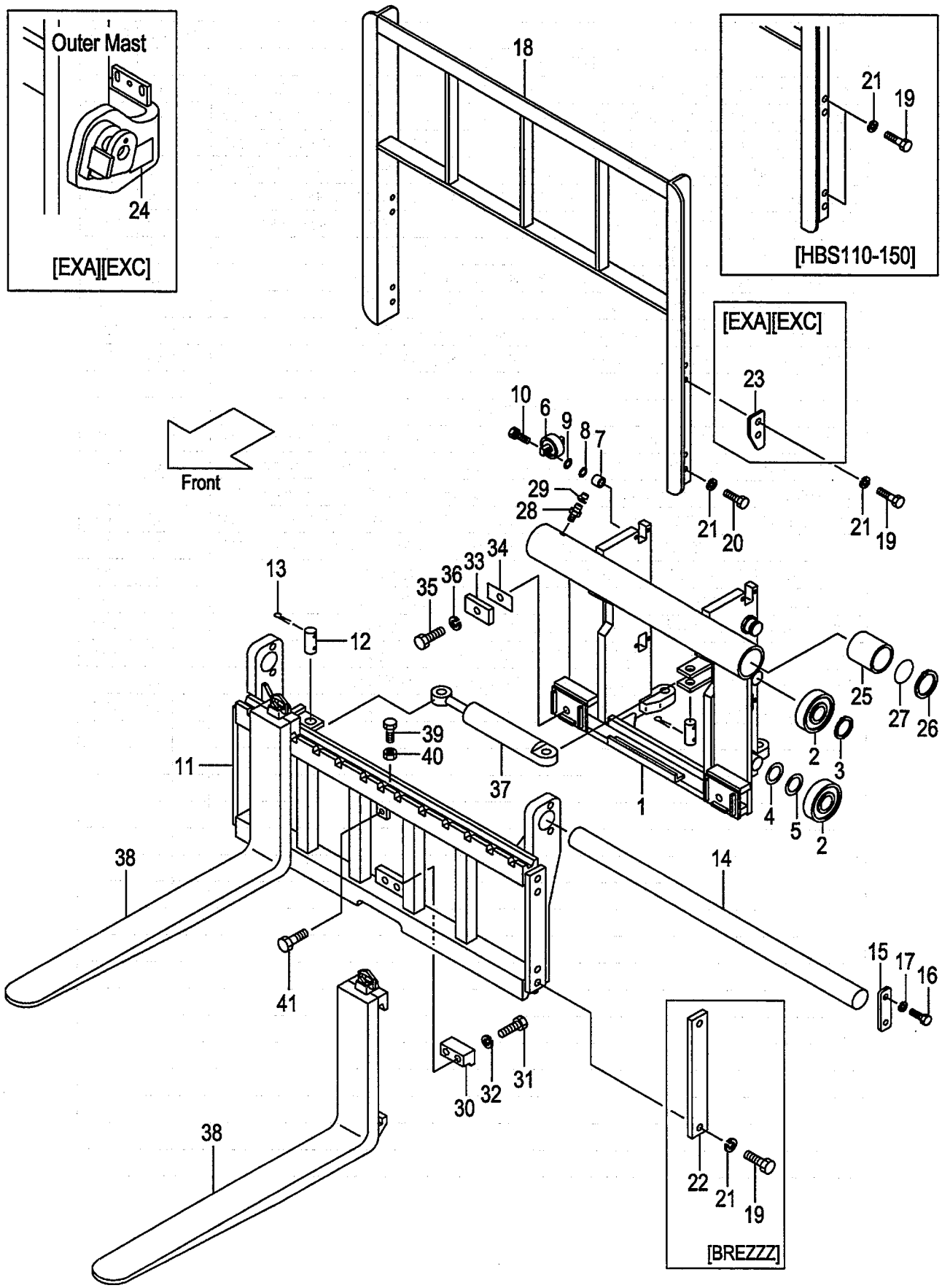

A:SS25B(VM/J)
B:SS22B(VFM/J)
C:SS23B(VFHM/J)

FIG.1
(A502SS10)

Item No	Part No.	Mark	Description		Req'd	Remarks : Serial No.
-	577P3-74001		ROLLER,END,119	ローラ	4	C [FC][CS35][FCS35][FCS45] [FCS55]
-	277P8-22061		ROLLER,END,119.5	ローラ	(4)	
-	577P3-74011		ROLLER,END,119.5	ローラ	(4)	[FC][CS35][FCS35][FCS45] [FCS55]
3	02100-00045		RING,SNAP	スナップリング	4	A,B
-	02100-00045		RING,SNAP	スナップリング	2	C
4	277P8-22071		SHIM,T-0.5	シム	10	
5	277P8-22081		SHIM,T-1.0	シム	10	
6	23458-32052		ROLLER,SIDE	ローラ	4	
-	514A3-71702		ROLLER,SIDE	ローラ	4	[FC][CS35][FCS35][FCS45] [FCS55]
7	22548-34031		SPACER	スペーサ	8	
8	22548-34051		SHIM,T-0.5	シム	10	
9	22548-34061		SHIM,T-1.0	シム	10	
10	01184-12050		BOLT & WASHER	ボルト&ワッシャ	8	
11	62576-10201		BAR,FINGER	バー	1	
-	62576-10211		BAR,FINGER	バー	1	[WFS]
-	62576-10221		BAR,FINGER	バー	1	[WWS]
12	62516-12261		PIN	ピン	2	
-	62576-12701		PIN	ピン	2	[FC][CS35][FCS35][FCS45] [FCS55]
13	02270-06040		PIN	ピン	4	
14	62576-12321		SHAFT	シャフト	1	
-	62576-12601		SHAFT	シャフト	1	[FC][CS35][FCS35][FCS45] [FCS55]
15	62576-12311		STOPPER	ストッパ	2	
16	01100-12025		BOLT	ボルト	4	
17	02010-00012		WASHER	ワッシャ	4	
18	234A8-22202		REST,BACK	バックレスト	1	
-	534A1-64402		REST,BACK	バックレスト	1	[WFS]
-	534A1-64412		REST,BACK	バックレスト	1	[WWS]
-	534A2-74001		REST,BACK	バックレスト	1	[EXA][EXC](WITHOUT WFS,WWS)
-	239A8-20101		REST,BACK	バックレスト	1	[HBS110](WITHOUT WFS,WWS)
-	239A8-20111		REST,BACK	バックレスト	1	[HBS120](WITHOUT WFS,WWS)
-	239A8-20121		REST,BACK	バックレスト	1	[HBS130](WITHOUT WFS,WWS)
-	239A8-20131		REST,BACK	バックレスト	1	[HBS140](WITHOUT WFS,WWS)
-	239A8-20141		REST,BACK	バックレスト	1	[HBS150](WITHOUT WFS,WWS)
19	01100-14030		BOLT	ボルト	4	(WITHOUT BREZZZ)
-	01100-14030		BOLT	ボルト	8	[HBS](WITHOUT WFS,WWS)
-	01100-14035		BOLT	ボルト	4	[EXA][EXC](WITHOUT WFS,WWS)
20	01100-14025		BOLT	ボルト	4	(WITHOUT HBS)
21	02010-00014		WASHER	ワッシャ	8	
-	02010-00014		WASHER	ワッシャ	4	[BREZZZ]
22	23659-42161		PLATE,SIDE	プレート	2	[BREZZZ]
23	534A2-74051		PLATE,STOPPER	プレート	2	[EXA][EXC](WITHOUT WFS,WWS)
24	534A2-74301		DECAL,CAUTION	デカル	1	[EXA][EXC](WITHOUT WFS,WWS)
25	62576-12351		BUSH	ブッシング	4	
26	22678-23751		RING,SNAP	スナップリング	2	

FIG.1 SIDE SHIFT [SS22B,SS23B,SS25B]

(A502SS10) サイドシフト

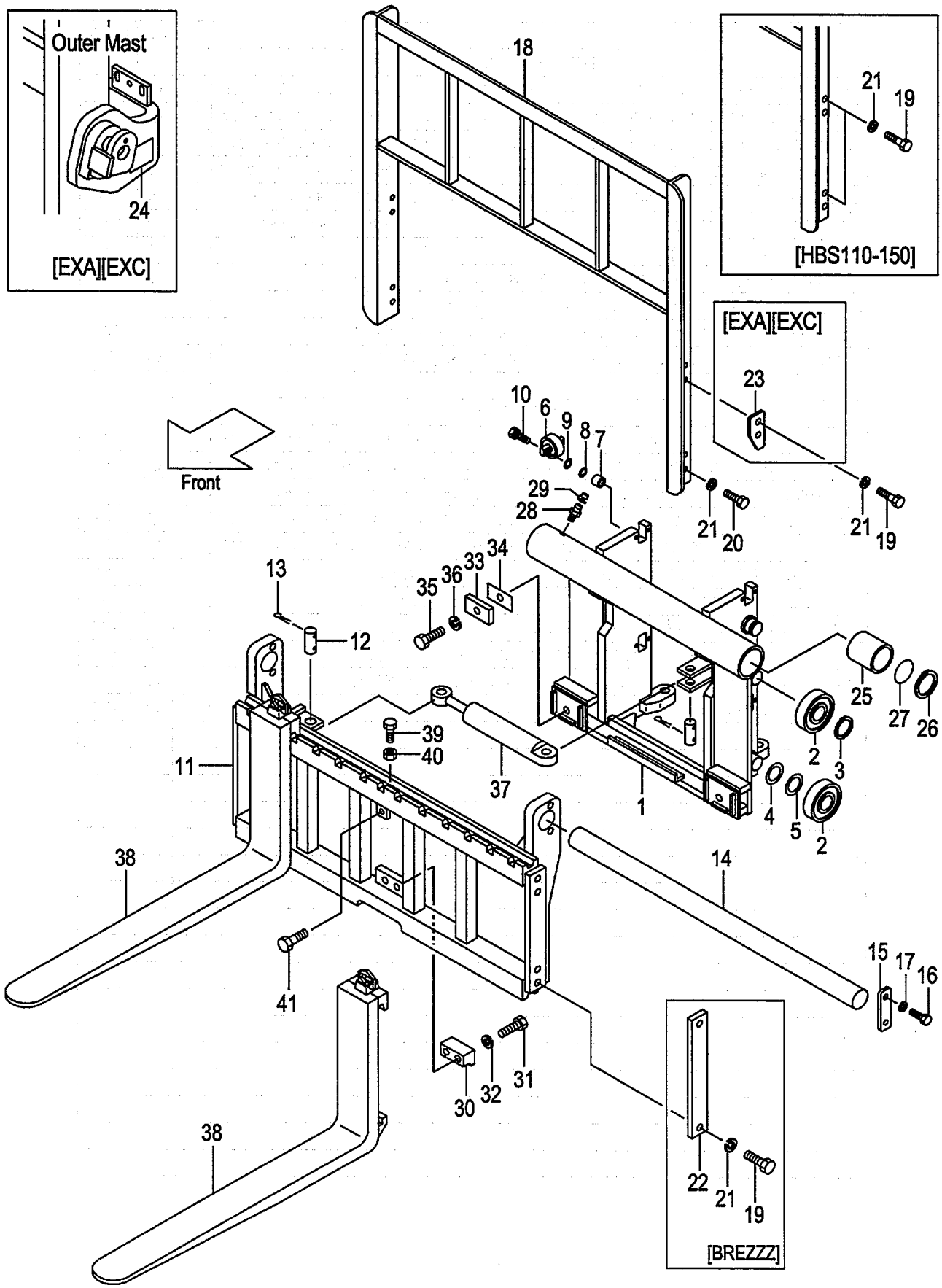

A:SS25B(VM/J)
B:SS22B(VFM/J)
C:SS23B(VFHM/J)

FIG.1
(A502SS10)

Item No	Part No.	Mark	Description		Req'd	Remarks : Serial No.
27	03310-00600		O-RING	Oﾘﾝｸﾞ	2	
28	04901-00160		FITTING	ﾌｨｯﾃｨﾝｸﾞ	2	
29	22199-12401		CAP	ｷｬｯﾌﾟ	2	
30	62016-12251		GUIDE,LOWER	ｶﾞｲﾄﾞ	1	
31	01100-16055		BOLT	ﾎﾞﾙﾄ	2	
32	02010-00016		WASHER	ﾜｯｼｬ	2	
33	62576-12301		BUSH	ﾌﾞｯｼﾝｸﾞ	2	
34	62576-12331		SHIM	ｼﾑ	2	
35	01100-10020		BOLT	ﾎﾞﾙﾄ	2	
36	02000-00010		WASHER	ﾜｯｼｬ	2	
37	62536-10301		CYL	ｼﾘﾝﾀﾞ	1	SEE FIG.2
-	62556-10401		CYL	ｼﾘﾝﾀﾞ	1	[FC][CS35][FCS35][FCS45] [FCS55]SEE FIG.2
38	NO PART NO.		FORK	ﾌｫｰｸ	2	SEE (VM39A,VFM39A,VFHM39A)
39	01120-08025		BOLT	ﾎﾞﾙﾄ	1	[EXD][EXE][EXN][EXH]
40	01400-00008		NUT	ﾅｯﾄ	1	[EXD][EXE][EXN][EXH]
41	01184-12025		BOLT	ﾎﾞﾙﾄ	1	
42	02432-01008	+	RIVET	ﾘﾍﾞｯﾄ	4	
43	63110-18901	+	PLATE,LOAD CHART	ﾌﾟﾚｰﾄ	1	
-	514A3-82301	+	PLATE,LOAD CHART	ﾌﾟﾚｰﾄ	1	(ENGLISH)
-	514A3-82321	+	PLATE,LOAD CHART	ﾌﾟﾚｰﾄ	1	(GERMAN)
-	514A3-82341	+	PLATE,LOAD CHART	ﾌﾟﾚｰﾄ	1	(FRENCH)
-	514A3-82331	+	PLATE,LOAD CHART	ﾌﾟﾚｰﾄ	1	(SPANISH)
-	514A3-82361	+	PLATE,LOAD CHART	ﾌﾟﾚｰﾄ	1	(DANISH)
-	514A3-82381	+	PLATE,LOAD CHART	ﾌﾟﾚｰﾄ	1	(GREEK)
-	514A3-82371	+	PLATE,LOAD CHART	ﾌﾟﾚｰﾄ	1	(ITALIAN)
-	514A3-82351	+	PLATE,LOAD CHART	ﾌﾟﾚｰﾄ	1	(DUTCH)
-	514A3-82391	+	PLATE,LOAD CHART	ﾌﾟﾚｰﾄ	1	(PORTUGUESE)
44	09210-10300	+	PLATE,NAME	ﾌﾟﾚｰﾄ	1	
-	09210-10300	+	PLATE,NAME	ﾌﾟﾚｰﾄ	1	(ENGLISH)
-	63110-19211	+	PLATE,NAME	ﾌﾟﾚｰﾄ	1	(GERMAN)
-	63110-19251	+	PLATE,NAME	ﾌﾟﾚｰﾄ	1	(FRENCH)
-	63110-19231	+	PLATE,NAME	ﾌﾟﾚｰﾄ	1	(SPANISH)
-	63110-19291	+	PLATE,NAME	ﾌﾟﾚｰﾄ	1	(DANISH)
-	63110-19331	+	PLATE,NAME	ﾌﾟﾚｰﾄ	1	(GREEK)
-	63110-19311	+	PLATE,NAME	ﾌﾟﾚｰﾄ	1	(ITALIAN)
-	63110-19271	+	PLATE,NAME	ﾌﾟﾚｰﾄ	1	(DUTCH)
-	63110-19351	+	PLATE,NAME	ﾌﾟﾚｰﾄ	1	(PORTUGUESE)
45	63110-19811	+	DECAL	ﾃﾞｶﾙ	1	
46	214A7-42181	+	KNOB	ﾉﾌﾞ	1	
47	62056-12651	+	DECAL	ﾃﾞｶﾙ	2	
48	62576-17001	+	DECAL,CAUTION	ﾃﾞｶﾙ	1	
-	62576-12961	+	DECAL,CAUTION	ﾃﾞｶﾙ	1	(ENGLISH)
-	62576-12971	+	DECAL,CAUTION	ﾃﾞｶﾙ	1	(GERMAN)
-	62576-12991	+	DECAL,CAUTION	ﾃﾞｶﾙ	1	(FRENCH)
-	62576-12981	+	DECAL,CAUTION	ﾃﾞｶﾙ	1	(SPANISH)
-	62576-13011	+	DECAL,CAUTION	ﾃﾞｶﾙ	1	(DANISH)
-	62576-13031	+	DECAL,CAUTION	ﾃﾞｶﾙ	1	(GREEK)
-	62576-13021	+	DECAL,CAUTION	ﾃﾞｶﾙ	1	(ITALIAN)
-	62576-13001	+	DECAL,CAUTION	ﾃﾞｶﾙ	1	(DUTCH)

FIG.1 SIDE SHIFT [SS22B,SS23B,SS25B]

(A502SS10) サイドシフト

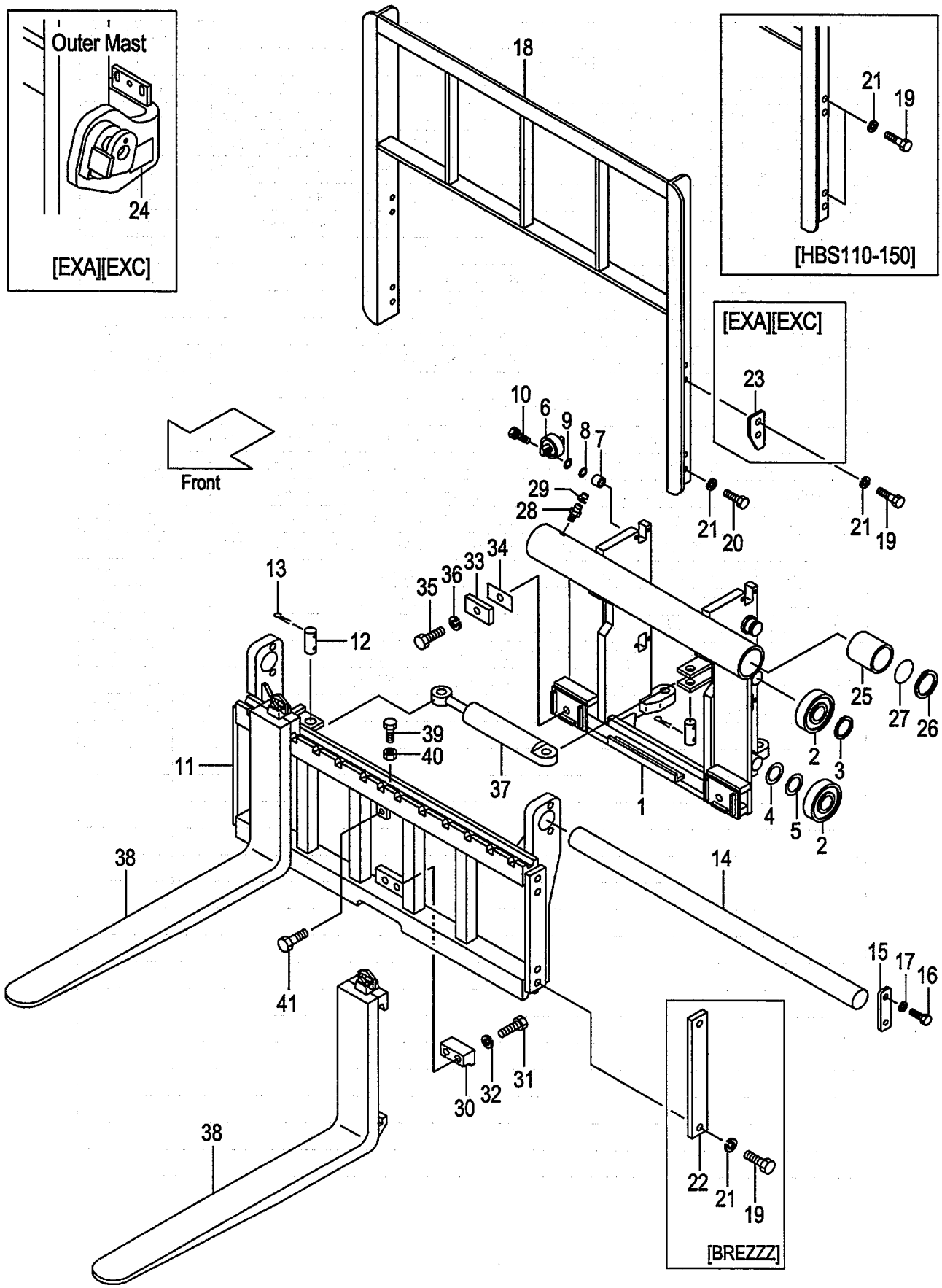

A:SS25B(VM/J)
B:SS22B(VFM/J)
C:SS23B(VFHM/J)

FIG.1
(A502SS10)

Item No	Part No.	Mark	Description	Req'd	Remarks : Serial No.
-	62576-13041	+	DECAL,CAUTION デカル	1	(PORTUGUESE)
49	62A66-17001	+	DECAL,CAUTION デカル	2	

FIG.2 CYLINDER [SS22B,SS23B,SS25B]

(A502SS20) シリンダ

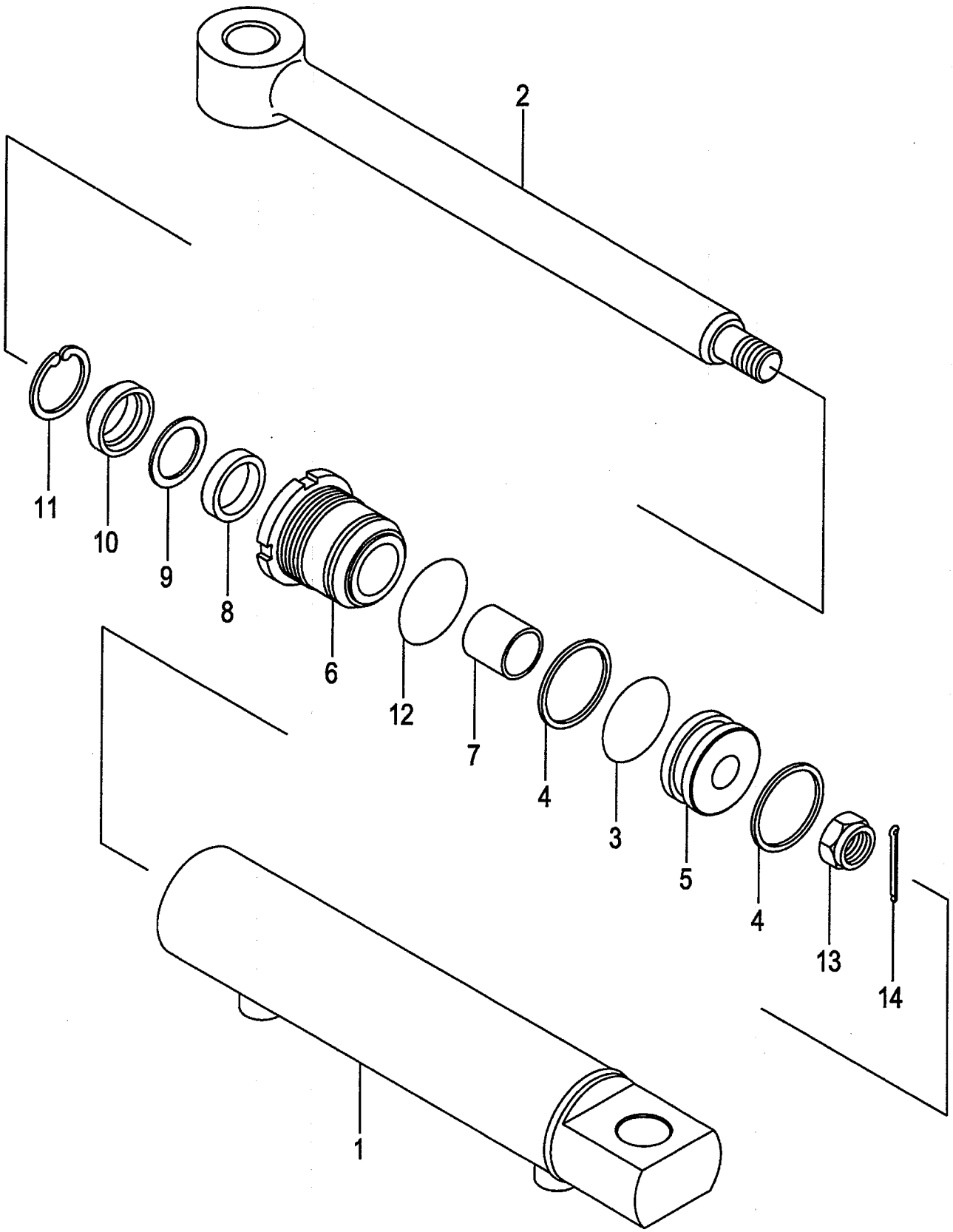

A:SS25B(VM/J)
B:SS22B(VFM/J)
C:SS23B(VFHM/J)

FIG.2
(A502SS20)

Item No	Part No.	Mark	Description		Req'd	Remarks : Serial No.
A1	62536-10301		CYL-ASSY	ｼﾘﾝﾀﾞｱｯｾﾝ	1	INC.1-14
-	62556-10401		CYL-ASSY	ｼﾘﾝﾀﾞｱｯｾﾝ	1	[FC][CS35][FCS35][FCS45] [FCS55] INC.1-14
1	62546-10321		TUBE	ﾁｭｰﾌﾞ	1	
2	62546-10311		ROD,PISTON	ﾛｯﾄﾞ	1	
3	03300-00390	*	O-RING	Oﾘﾝｸﾞ	1	
-	27948-52001	*	O-RING	Oﾘﾝｸﾞ	1	[FC][CS35][FCS35][FCS45] [FCS55]
4	27738-52091	*	RING,BACK-UP	ﾘﾝｸﾞ	2	
-	27978-52211	*	RING,BACK-UP	ﾘﾝｸﾞ	2	[FC][CS35][FCS35][FCS45] [FCS55]
5	62546-12191		PISTON	ﾋﾟｽﾄﾝ	1	
6	62546-12201		CAP	ｷｬｯﾌﾟ	1	
7	25594-52411		BUSH	ﾌﾞｯｼﾝｸﾞ	1	
8	25594-52371	*	PACKING	ﾊﾟｯｷﾝｸﾞ	1	
-	59505-54031	*	PACKING	ﾊﾟｯｷﾝｸﾞ	1	[FC][CS35][FCS35][FCS45] [FCS55]
9	62546-12211	*	RING,BACK-UP	ﾘﾝｸﾞ	1	
-	59505-54041	*	RING,BACK-UP	ﾘﾝｸﾞ	1	[FC][CS35][FCS35][FCS45] [FCS55]
10	25594-52381	*	SEAL,DUST	ｼｰﾙ	1	
-	59505-54051	*	SEAL,DUST	ｼｰﾙ	1	[FC][CS35][FCS35][FCS45] [FCS55]
11	25594-52391	*	RING,SNAP	ｽﾅｯﾌﾟﾘﾝｸﾞ	1	
12	03350-00400	*	O-RING	Oﾘﾝｸﾞ	1	
-	59565-54031	*	O-RING	Oﾘﾝｸﾞ	1	[FC][CS35][FCS35][FCS45] [FCS55]
13	01412-10016		NUT	ﾅｯﾄ	1	
14	02200-04030		PIN,COTTER	ﾋﾟﾝ	1	
K1	62536-19801		KIT,REPAIR	ﾘﾍﾟｱｷｯﾄ	1	INC.3,4,8-12
-	62556-19801		KIT,REPAIR	ﾘﾍﾟｱｷｯﾄ	1	[FC][CS35][FCS35][FCS45] [FCS55] INC.3,4,8-12

FIG.3 HYDRAULIC LINE (CONNECTOR-CYLINDER)

(A502SS30) ﾊｲﾄﾞﾛﾘｯｸﾗｲﾝ (ｺﾈｸﾀｰｼﾘﾝﾀﾞ)

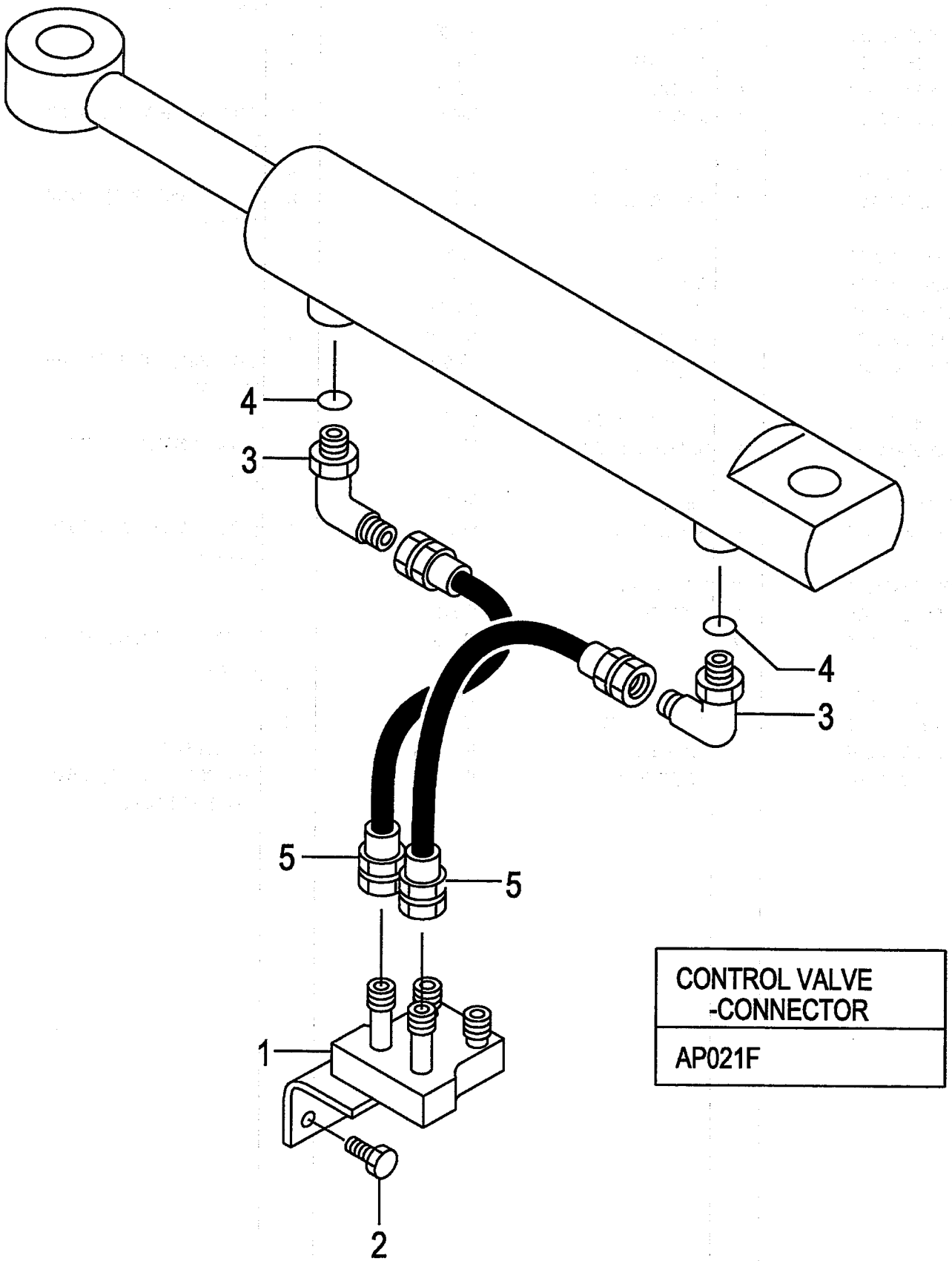

FIG.3
(A502SS30)

A:SS25B(VM/J)

Item No	Part No.	Mark	Description		Req'd	Remarks : Serial No.
1	621F0-12061		STUD	ｽﾀｯﾄﾞ	1	
2	01184-10025		BOLT & WASHER	ﾎﾞﾙﾄ&ﾜｯｼｬ	2	
3	04150-00202		ELBOW	ｴﾙﾎﾞ	2	
4	03320-00110		O-RING	Oﾘﾝｸﾞ	2	
5	63130-31045		HOSE	ﾎｰｽ	2	

FIG.4 HYDRAULIC LINE (CONNECTOR-CYLINDER)[VFM,VFHM]

(A502SS40) ﾊｲﾄﾞﾛﾘｯｸﾗｲﾝ (ｺﾈｸﾀｰｼﾘﾝﾀﾞｰ)

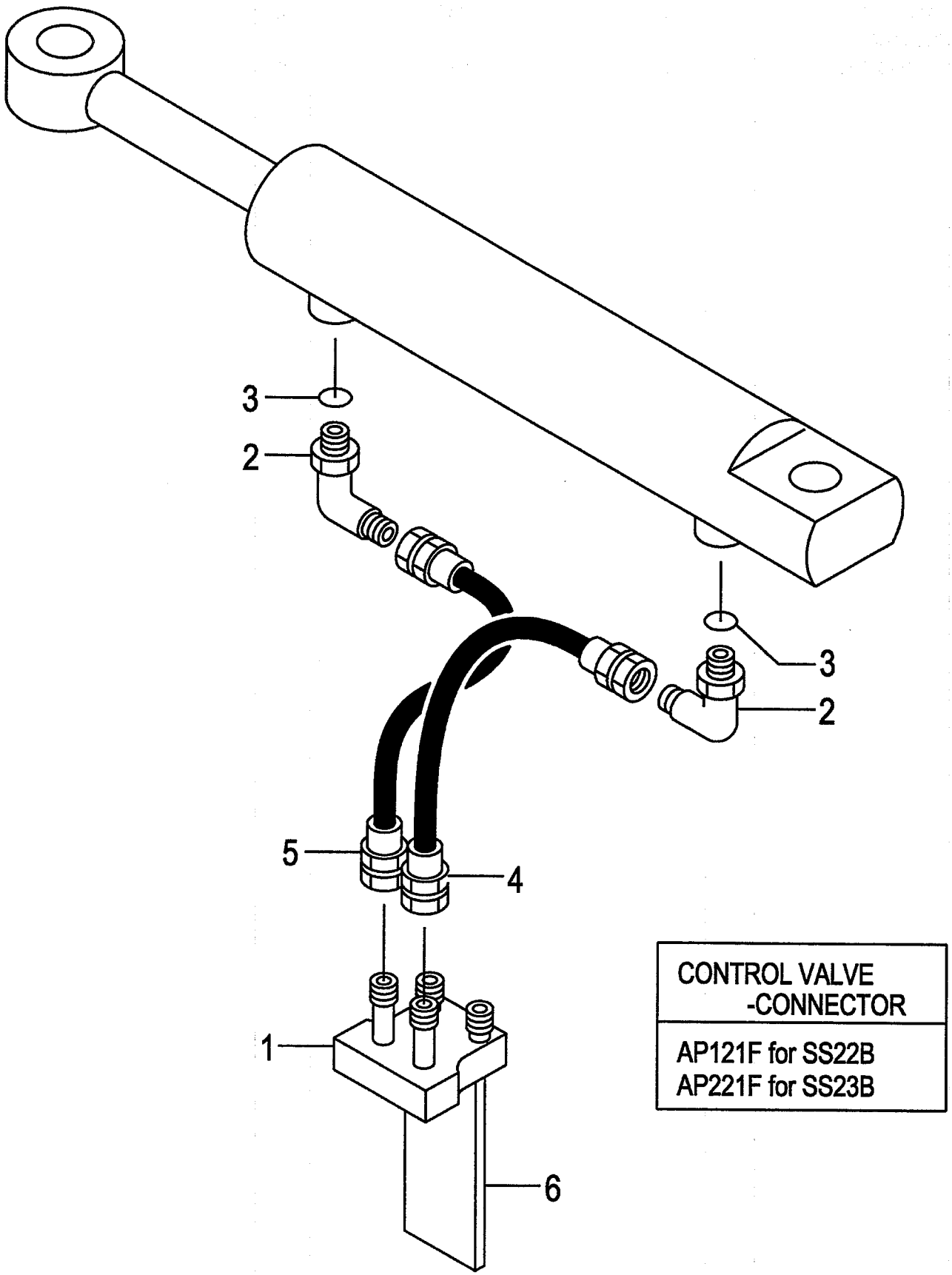

A:SS22B(VFM/J)
B:SS23B(VFHM/J)

FIG.4
(A502SS40)

Item No	Part No.	Mark	Description		Req'd	Remarks : Serial No.
1	63130-11501		STUD	ｽﾀｯﾄﾞ	1	
2	04150-00202		ELBOW	ｴﾙﾎﾞ	2	
3	03320-00110		O-RING	Oﾘﾝｸﾞ	2	
4	63130-31050		HOSE	ﾎｰｽ	1	
5	63130-31040		HOSE	ﾎｰｽ	1	A
-	63130-31050		HOSE	ﾎｰｽ	1	B
6	62286-12201		PLATE	ﾌﾟﾚｰﾄ	1	

FIG.5 SIDE SHIFT [SS2A8]

(A502SS50) サイドシフト

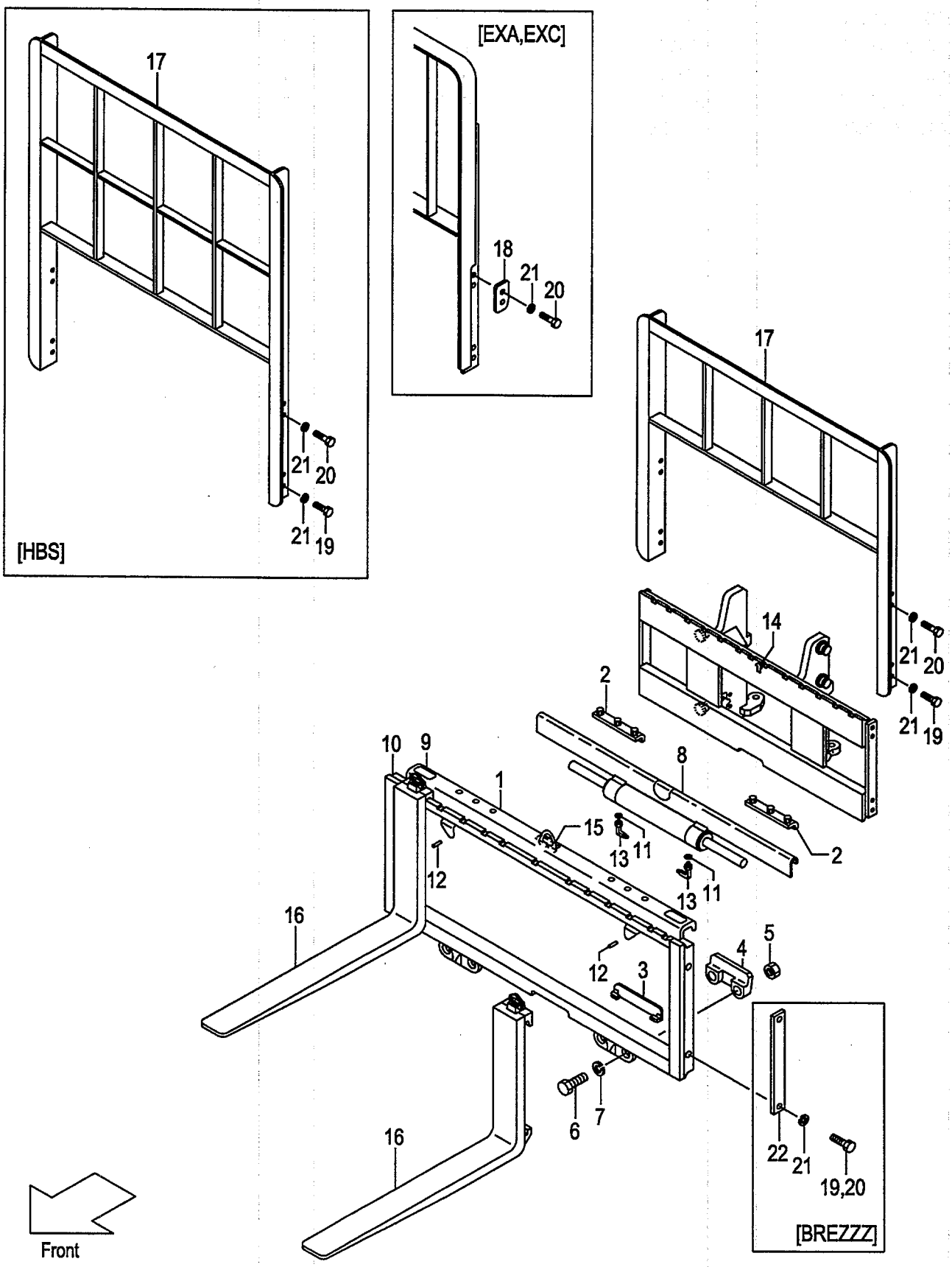

A:SS2A8(VM/J)

Item No	Part No.	Mark	Description		Req'd	Remarks : Serial No.
A1	62A86-10013		SHIFT-ASSY,SIDE	ｻｲﾄﾞｼﾌﾄｱｯｾﾝ	1	INC.1-20
1	NO PART NO.	#	BAR,FINGER	ﾊﾞｰ	1	
2	W-228782		BRG,UPPER	ﾍﾞｱﾘﾝｸﾞ	2	
-	W-218363		BRG,UPPER	ﾍﾞｱﾘﾝｸﾞ	2	[OP.]
3	W-218361		BRG,LOWER	ﾍﾞｱﾘﾝｸﾞ	2	
4	W-204186	*	HOOK	ﾌｯｸ	2	
5	W-553857	*	NUT 5/8	ﾅｯﾄ	4	
6	W-639121	*	SCREW 5/8	ｽｸﾘｭ	4	
7	W-667225	*	WASHER	ﾜｯｼｬ	4	
8	W-21006-1		CYL	ｼﾘﾝﾀﾞ	1	SEE FIG.6
9	W-221906		DECAL,SAFTY	ﾃﾞｶﾙ	2	
10	W-219400		STOPPER	ｽﾄｯﾊﾟ	1	
11	W-221733		RESTRICTOR	ﾘｽﾄﾘｸﾀ	2	
12	W-675514		HOOK	ﾌｯｸ	2	[QUICK DISCONNECT]
13	W-678832		PIN	ﾋﾟﾝ	2	[QUICK DISCONNECT]
14	W-683182		SCREW	ｽｸﾘｭ	4	[QUICK DISCONNECT]
15	W-675515		GUIDE	ｶﾞｲﾄﾞ	2	[QUICK DISCONNECT]
16	W-7890		PIN	ﾋﾟﾝ	2	
17	W-220689	*	GUARD	ｶﾞｰﾄﾞ	1	[PALLET GUARD]
18	W-769573	*	SCREW	ｽｸﾘｭ	2	[PALLET GUARD]
19	W-684588	*	WASHER	ﾜｯｼｬ	2	[PALLET GUARD]
20	W-601676		ELBOW	ｴﾙﾎﾞ	2	
21	62056-12651		DECAL	ﾃﾞｶﾙ	1	
22	62056-12661		DECAL	ﾃﾞｶﾙ	1	
23	NO PART NO.	#	FORK	ﾌｫｰｸ	2	SEE (VM39A,VFM39A,VFHM39A)
24	234A8-22202		REST,BACK	ﾊﾞｯｸﾚｽﾄ	1	
-	239A8-20101		REST,BACK	ﾊﾞｯｸﾚｽﾄ	1	[HBS110]
-	239A8-20111		REST,BACK	ﾊﾞｯｸﾚｽﾄ	1	[HBS120]
-	239A8-20121		REST,BACK	ﾊﾞｯｸﾚｽﾄ	1	[HBS130]
-	239A8-20131		REST,BACK	ﾊﾞｯｸﾚｽﾄ	1	[HBS140]
-	239A8-20141		REST,BACK	ﾊﾞｯｸﾚｽﾄ	1	[HBS150]
-	534A2-74001		REST,BACK	ﾊﾞｯｸﾚｽﾄ	1	[EXA][EXC]
25	534A2-74051		PLATE	ﾌﾟﾚｰﾄ	2	[EXA][EXC]
26	01100-14025		BOLT	ﾎﾞﾙﾄ	4	
-	01100-14030		BOLT	ﾎﾞﾙﾄ	4	[HBS]
-	01100-14025		BOLT	ﾎﾞﾙﾄ	2	[BREZZZ]
27	01100-14030		BOLT	ﾎﾞﾙﾄ	4	
-	01100-14035		BOLT	ﾎﾞﾙﾄ	4	[EXA][EXC]
-	01100-14025		BOLT	ﾎﾞﾙﾄ	2	[BREZZZ]
28	02010-00014		WASHER	ﾜｯｼｬ	8	
-	02010-00014		WASHER	ﾜｯｼｬ	4	[BREZZZ]
29	23659-42161		PLATE,SIDE	ﾌﾟﾚｰﾄ	2	[BREZZZ]
30	02432-01008	+	RIVET	ﾘﾍﾞｯﾄ	4	
31	63110-18901	+	PLATE,LOAD CHART	ﾌﾟﾚｰﾄ	1	
-	514A3-82301	+	PLATE,LOAD CHART	ﾌﾟﾚｰﾄ	1	(ENGLISH)
-	63110-18911	+	PLATE,LOAD CHART	ﾌﾟﾚｰﾄ	1	(ENGLISH)
-	524T3-84031	+	PLATE,LOAD CHART	ﾌﾟﾚｰﾄ	1	(RUSSIAN)
-	63110-18921	+	PLATE,LOAD CHART	ﾌﾟﾚｰﾄ	1	(CHINESE)
-	514A3-82321	+	PLATE,LOAD CHART	ﾌﾟﾚｰﾄ	1	(GERMAN)
-	514A3-82341	+	PLATE,LOAD CHART	ﾌﾟﾚｰﾄ	1	(FRENCH)

FIG.5 SIDE SHIFT [SS2A8]

(A502SS50) サイドシフト

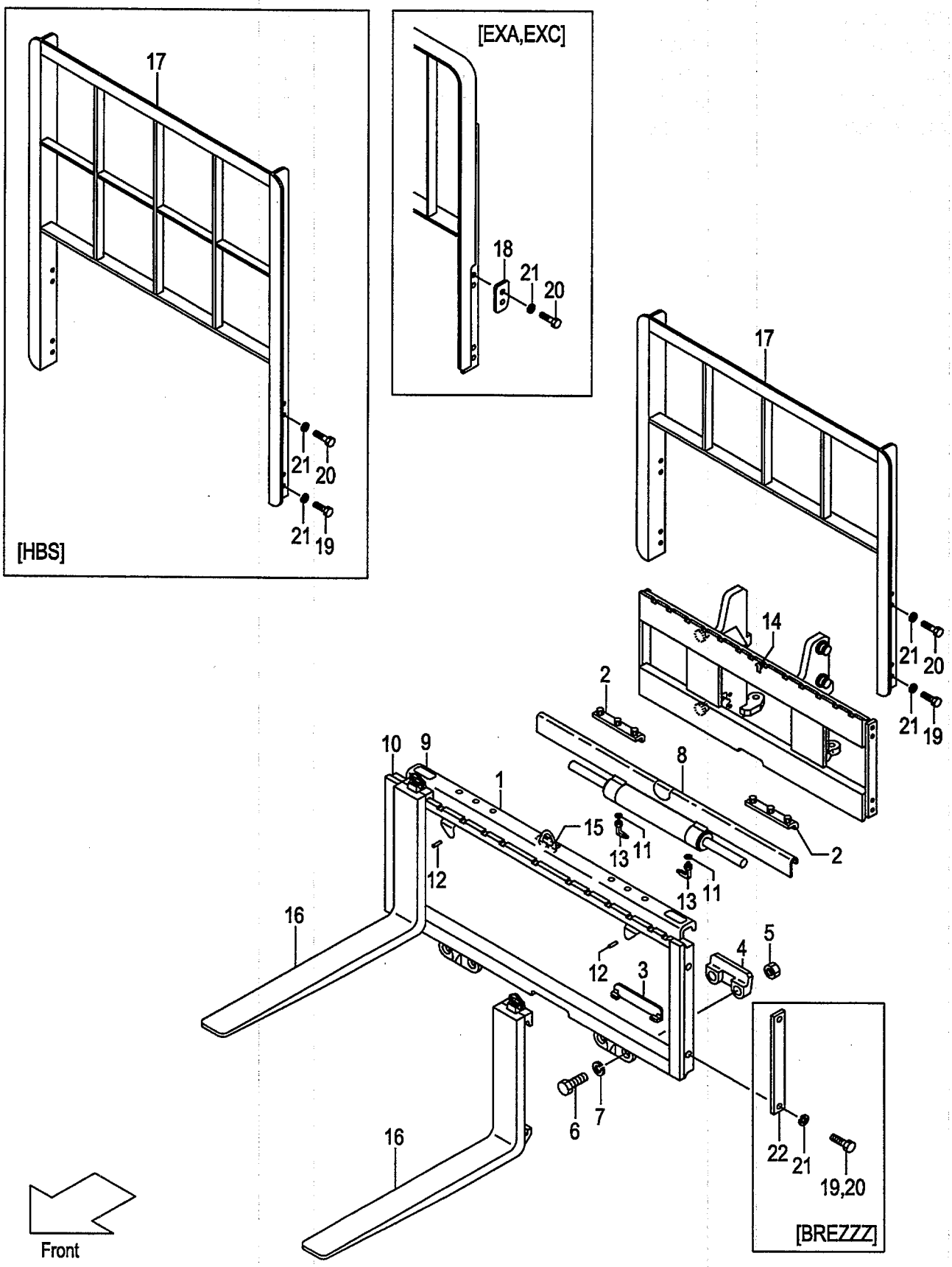

A:SS2A8(VM/J)

Item No	Part No.	Mark	Description		Req'd	Remarks : Serial No.
-	514A3-82331	+	PLATE,LOAD CHART	ﾌﾟﾚｰﾄ	1	(SPANISH)
-	514A3-82361	+	PLATE,LOAD CHART	ﾌﾟﾚｰﾄ	1	(DANISH)
-	514A3-82381	+	PLATE,LOAD CHART	ﾌﾟﾚｰﾄ	1	(GREEK)
-	514A3-82371	+	PLATE,LOAD CHART	ﾌﾟﾚｰﾄ	1	(ITALIAN)
-	514A3-82351	+	PLATE,LOAD CHART	ﾌﾟﾚｰﾄ	1	(DUTCH)
-	514A3-82391	+	PLATE,LOAD CHART	ﾌﾟﾚｰﾄ	1	(PORTUGUESE)
32	09210-10300	+	PLATE,NAME	ﾌﾟﾚｰﾄ	1	
-	09210-10300	+	PLATE,NAME	ﾌﾟﾚｰﾄ	1	(ENGLISH)
-	63110-32111	+	PLATE,NAME	ﾌﾟﾚｰﾄ	1	(RUSSIAN)
-	09201-06201	+	PLATE,NAME	ﾌﾟﾚｰﾄ	1	(CHINESE)
-	63110-19211	+	PLATE,NAME	ﾌﾟﾚｰﾄ	1	(GERMAN)
-	63110-19251	+	PLATE,NAME	ﾌﾟﾚｰﾄ	1	(FRENCH)
-	63110-19231	+	PLATE,NAME	ﾌﾟﾚｰﾄ	1	(SPANISH)
-	63110-19291	+	PLATE,NAME	ﾌﾟﾚｰﾄ	1	(DANISH)
-	63110-19331	+	PLATE,NAME	ﾌﾟﾚｰﾄ	1	(GREEK)
-	63110-19311	+	PLATE,NAME	ﾌﾟﾚｰﾄ	1	(ITALIAN)
-	63110-19271	+	PLATE,NAME	ﾌﾟﾚｰﾄ	1	(DUTCH)
-	63110-19351	+	PLATE,NAME	ﾌﾟﾚｰﾄ	1	(PORTUGUESE)
33	214A7-42181	+	KNOB,DARK-GRAY	ﾉﾌﾞ	1	
34	63110-19811	+	DECAL,SS	ﾃﾞｶﾙ	1	
35	62576-17001	+	DECAL,CAUTION	ﾃﾞｶﾙ	1	
-	62576-12961	+	DECAL,CAUTION	ﾃﾞｶﾙ	1	(ENGLISH)
-	62576-12971	+	DECAL,CAUTION	ﾃﾞｶﾙ	1	(GERMAN)
-	62576-12991	+	DECAL,CAUTION	ﾃﾞｶﾙ	1	(FRENCH)
-	62576-12981	+	DECAL,CAUTION	ﾃﾞｶﾙ	1	(SPANISH)
-	62576-13011	+	DECAL,CAUTION	ﾃﾞｶﾙ	1	(DANISH)
-	62576-13031	+	DECAL,CAUTION	ﾃﾞｶﾙ	1	(GREEK)
-	62576-13021	+	DECAL,CAUTION	ﾃﾞｶﾙ	1	(ITALIAN)
-	62576-13001	+	DECAL,CAUTION	ﾃﾞｶﾙ	1	(DUTCH)
-	62576-13041	+	DECAL,CAUTION	ﾃﾞｶﾙ	1	(PORTUGUESE)
36	62A66-17001	+	DECAL,CAUTION	ﾃﾞｶﾙ	2	
37	534A2-74301	+	DECAL,CAUTION	ﾃﾞｶﾙ	1	[EXA][EXC]
K1	W-204182		KIT,SERVICE	ｻｰﾋﾞｽｷｯﾄ	1	INC.4-7
K2	W-220888		KIT,GUARD	ｶﾞｰﾄﾞｷｯﾄ	1	[PALLET GUARD] INC.17-19

FIG.6 CYLINDER [SS2A8]
(A502SS70) ｼﾘﾝﾀﾞ

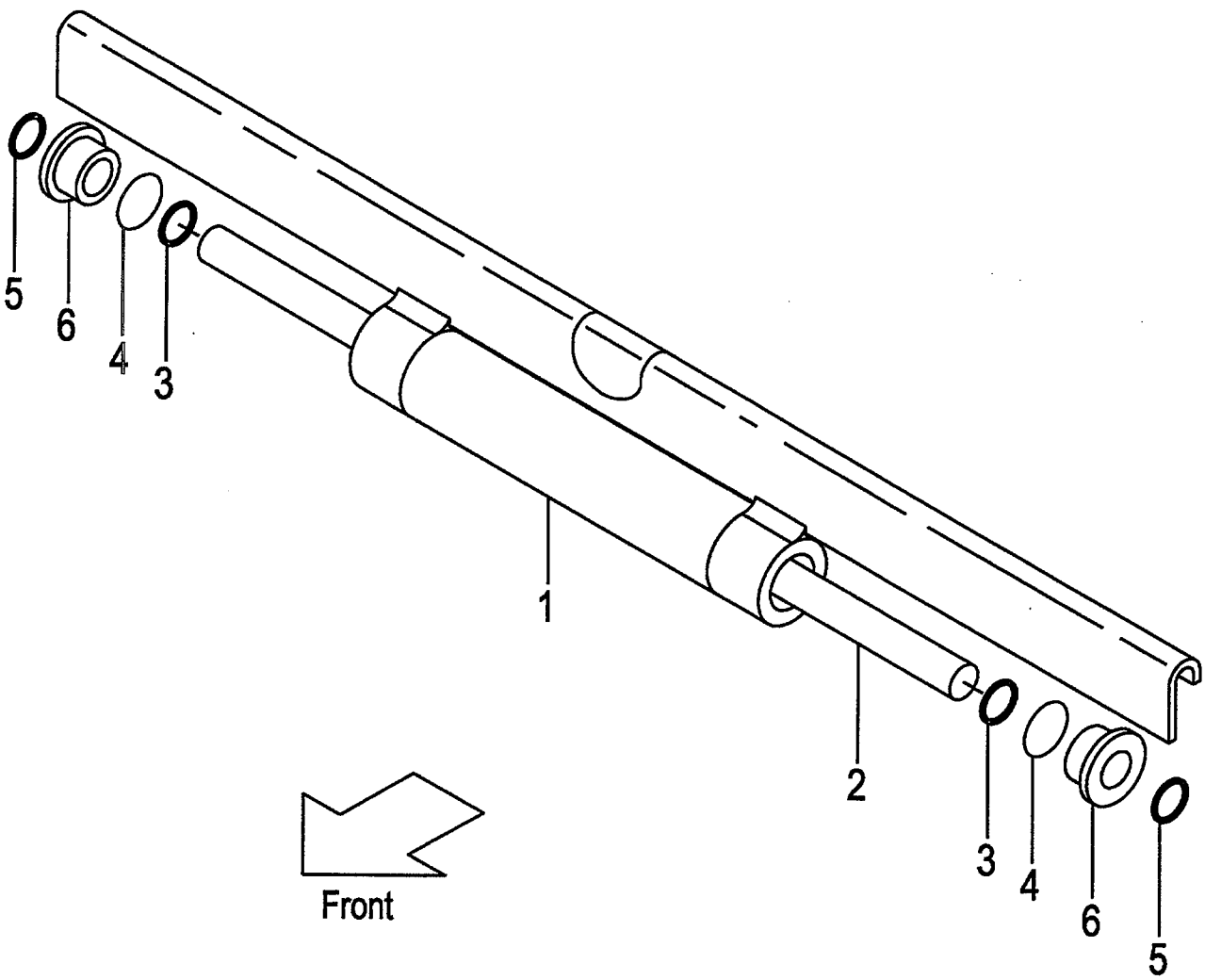

FIG.6
(A502SS70)

A:SS2A8(VM/J)

Item No	Part No.	Mark	Description		Req'd	Remarks : Serial No.
A1	W-21006-1		CYL-ASSY	ｼﾘﾝﾀﾞｱｯｾﾝ	1	INC.1-6
1	NO PART NO.	#	TUBE	ﾁｭｰﾌﾞ	1	
2	NO PART NO.	#	ROD	ﾛｯﾄﾞ	1	
3	W-562132	*	SEAL	ｼｰﾙ	2	
4	W-415866	*	O-RING	Oﾘﾝｸﾞ	2	
5	W-562131	*	SEAL	ｼｰﾙ	2	
6	W-218324		RETAINER	ﾘﾃｰﾅ	2	
K1	W-219868		KIT,SERVICE	ｻｰﾋﾞｽｷｯﾄ	1	INC.3-5

FIG.7 HYDRAULIC LINE (CONNECTOR-CYLINDER)

(A502SS80) ﾊｲﾄﾞﾛﾘｯｸﾗｲﾝ (ｺﾈｸﾀｰｼﾘﾝﾀﾞｰ)

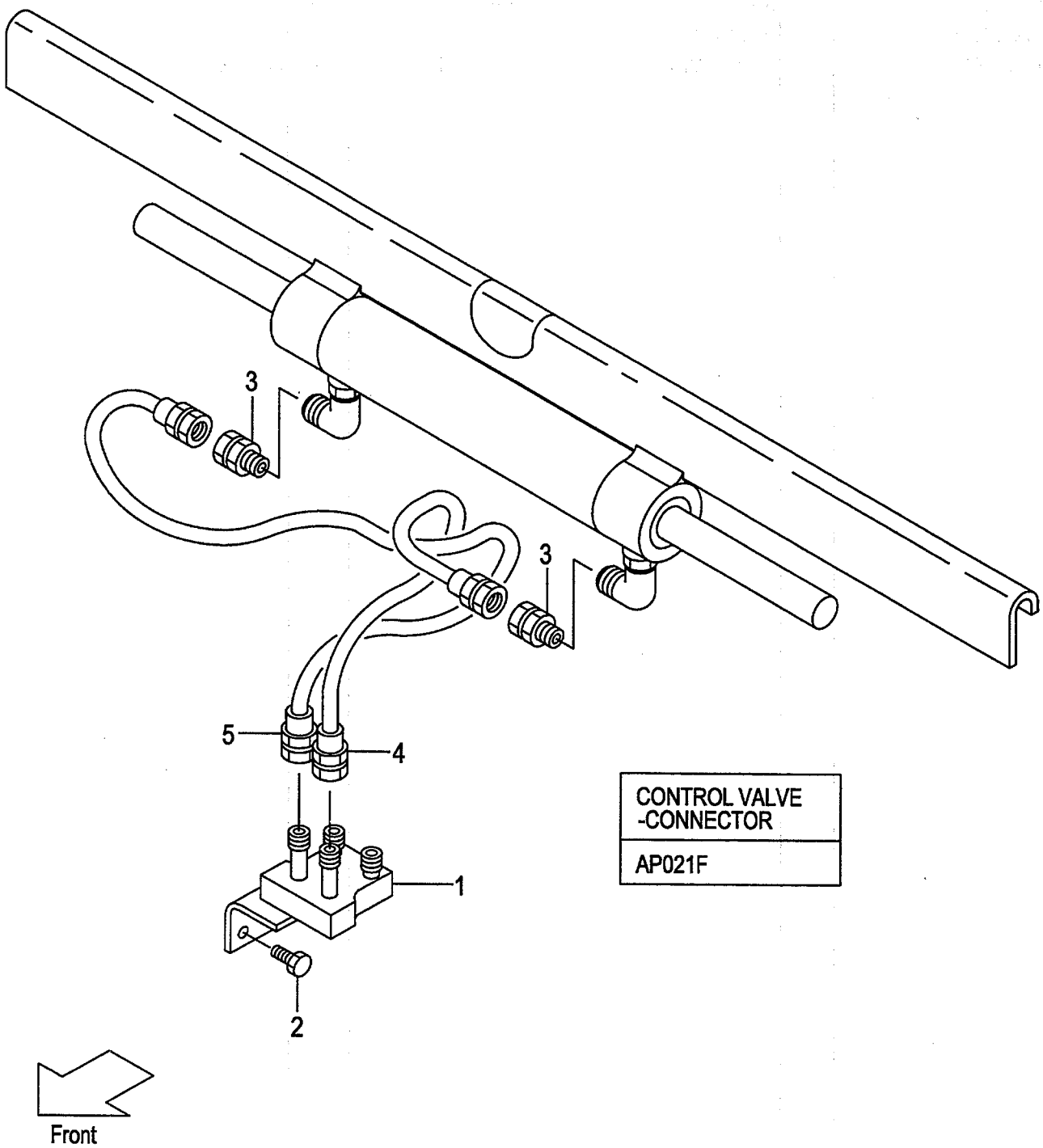

CONTROL VALVE -CONNECTOR
AP021F

FIG.7
(A502SS80)

A:SS2A8(VM/J)

Item No	Part No.	Mark	Description		Req'd	Remarks : Serial No.
1	621F0-12061		STUD	ｽﾀｯﾄﾞ	1	
2	01184-10025		BOLT & WASHER	ﾎﾞﾙﾄ&ﾜｯｼｬ	2	
3	97050-01840		UNION	ﾕﾆｵﾝ	2	
4	63130-31050		HOSE	ﾎｰｽ	1	
5	63130-31040		HOSE	ﾎｰｽ	1	

FIG.8 HYDRAULIC LINE (CONNECTOR-CYLINDER)[VFM,VFHM]

(A502SS90) ﾊｲﾄﾞﾛﾘｯｸﾗｲﾝ (ｺﾈｸﾀｰｼﾘﾝﾀﾞｰ)

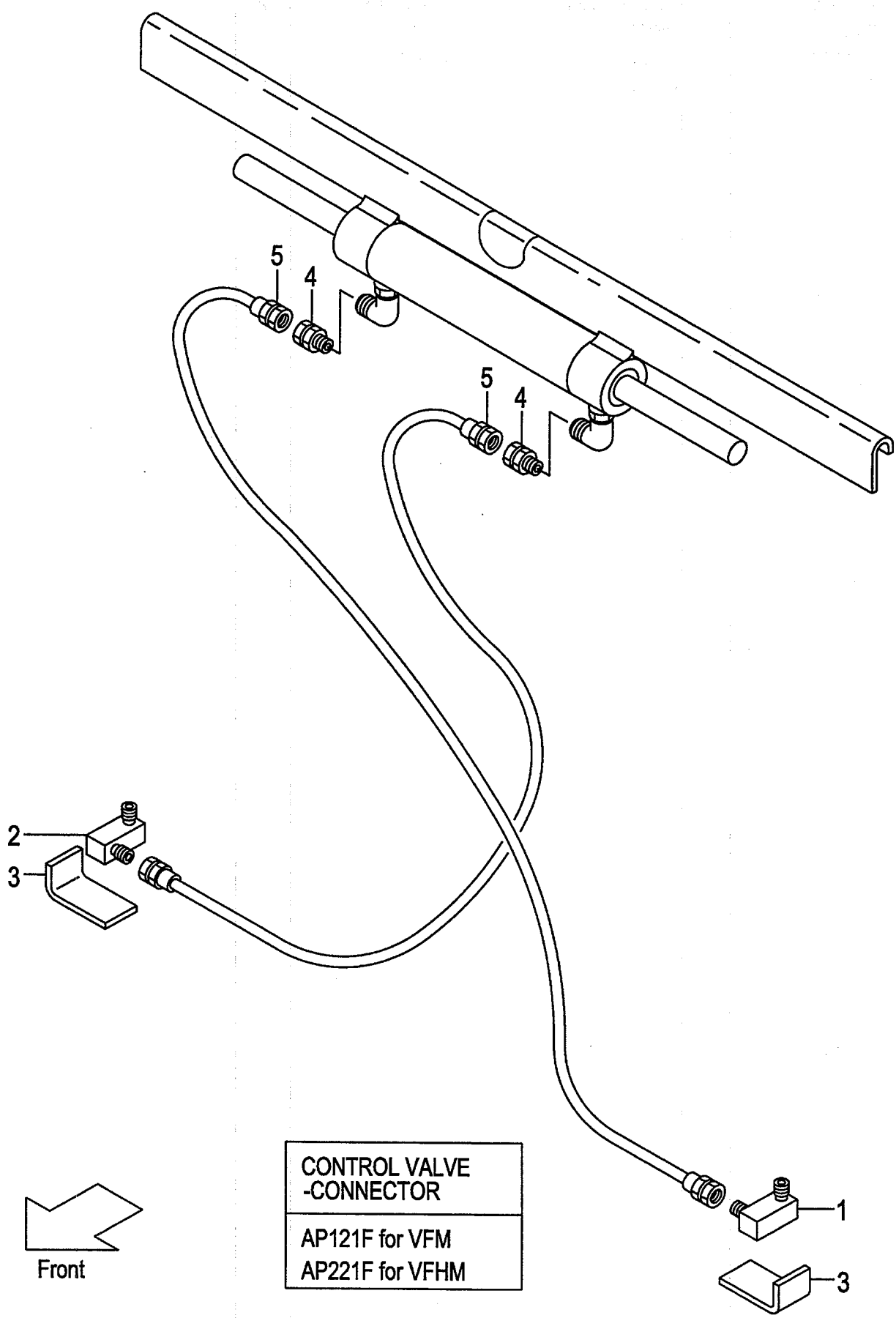

A:SS2A8(VFM/J)
B:SS2A8(VFHM/J)

FIG.8
(A502SS90)

Item No	Part No.	Mark	Description		Req'd	Remarks : Serial No.
1	63110-14731		STUD	ｽﾀｯﾄﾞ	1	
2	63110-14751		STUD	ｽﾀｯﾄﾞ	1	
3	62150-12001		ANGLE	ｱﾝｸﾞﾙ	2	A
4	97050-01850		UNION	ﾕﾆｵﾝ	2	
5	63130-21080		HOSE	ﾎｰｽ	2	

FIG.9 SIDE SHIFT [SS28A,SS29A,SS31A]

(A503SS10) サイドシフト

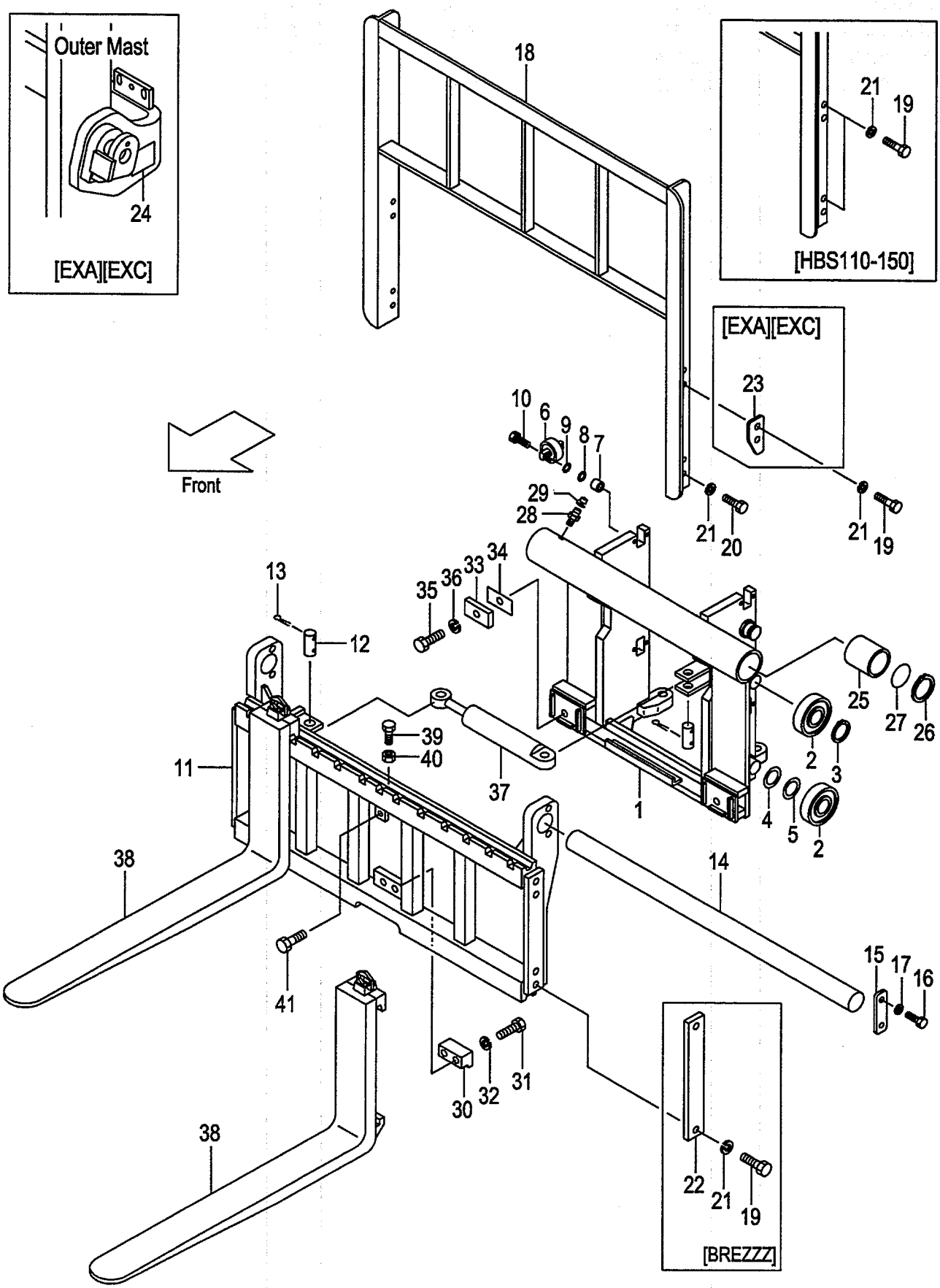

A:SS31A(VM/J)
B:SS28A(VFM/J)
C:SS29A(VFHM/J)

FIG.9
(A503SS10)

Item No	Part No.	Mark	Description		Req'd	Remarks : Serial No.
A1	631A6-10001		SHIFT-ASSY,SIDE	ｻｲﾄﾞｼﾌﾄｱｯｾﾝ	1	A INC.1-37
-	631A6-10011		SHIFT-ASSY,SIDE	ｻｲﾄﾞｼﾌﾄｱｯｾﾝ	1	A [BREZZZ] INC.1-37
-	631A6-10021		SHIFT-ASSY,SIDE	ｻｲﾄﾞｼﾌﾄｱｯｾﾝ	1	A [WFS] INC.1-37
-	631A6-10031		SHIFT-ASSY,SIDE	ｻｲﾄﾞｼﾌﾄｱｯｾﾝ	1	A [WFS/BREZZZ] INC.1-37
-	631A6-10041		SHIFT-ASSY,SIDE	ｻｲﾄﾞｼﾌﾄｱｯｾﾝ	1	A [WWS] INC.1-37
-	631A6-10051		SHIFT-ASSY,SIDE	ｻｲﾄﾞｼﾌﾄｱｯｾﾝ	1	A [WWS/BREZZZ] INC.1-37
-	631A6-10301		SHIFT-ASSY,SIDE	ｻｲﾄﾞｼﾌﾄｱｯｾﾝ	1	A [FC][CS35][FCS35][FCS45] [FCS55] INC.1-37
-	631A6-10311		SHIFT-ASSY,SIDE	ｻｲﾄﾞｼﾌﾄｱｯｾﾝ	1	A [(FC,CS35,FCS35,45,55) /BREZZZ] INC.1-37
-	631A6-10321		SHIFT-ASSY,SIDE	ｻｲﾄﾞｼﾌﾄｱｯｾﾝ	1	A [(FC,CS35,FCS35,45,55) /WFS] INC.1-37
-	631A6-10331		SHIFT-ASSY,SIDE	ｻｲﾄﾞｼﾌﾄｱｯｾﾝ	1	A [(FC,CS35,FCS35,45,55) /WFS/BREZZZ] INC.1-37
-	631A6-10341		SHIFT-ASSY,SIDE	ｻｲﾄﾞｼﾌﾄｱｯｾﾝ	1	A [(FC,CS35,FCS35,45,55) /WWS] INC.1-37
-	631A6-10351		SHIFT-ASSY,SIDE	ｻｲﾄﾞｼﾌﾄｱｯｾﾝ	1	A [(FC,CS35,FCS35,45,55) /WWS/BREZZZ] INC.1-37
-	628B6-10001		SHIFT-ASSY,SIDE	ｻｲﾄﾞｼﾌﾄｱｯｾﾝ	1	B INC.1-37
-	628B6-10011		SHIFT-ASSY,SIDE	ｻｲﾄﾞｼﾌﾄｱｯｾﾝ	1	B [BREZZZ] INC.1-37
-	628B6-10021		SHIFT-ASSY,SIDE	ｻｲﾄﾞｼﾌﾄｱｯｾﾝ	1	B [WFS] INC.1-37
-	628B6-10031		SHIFT-ASSY,SIDE	ｻｲﾄﾞｼﾌﾄｱｯｾﾝ	1	B [WFS/BREZZZ] INC.1-37
-	628B6-10041		SHIFT-ASSY,SIDE	ｻｲﾄﾞｼﾌﾄｱｯｾﾝ	1	B [WWS] INC.1-37
-	628B6-10051		SHIFT-ASSY,SIDE	ｻｲﾄﾞｼﾌﾄｱｯｾﾝ	1	B [WWS/BREZZZ] INC.1-37
-	628B6-10301		SHIFT-ASSY,SIDE	ｻｲﾄﾞｼﾌﾄｱｯｾﾝ	1	B [FC][CS35][FCS35][FCS45] [FCS55] INC.1-37
-	628B6-10311		SHIFT-ASSY,SIDE	ｻｲﾄﾞｼﾌﾄｱｯｾﾝ	1	B [(FC,CS35,FCS35,45,55) /BREZZZ] INC.1-37

FIG.9 SIDE SHIFT [SS28A,SS29A,SS31A]

(A503SS10) サイドシフト

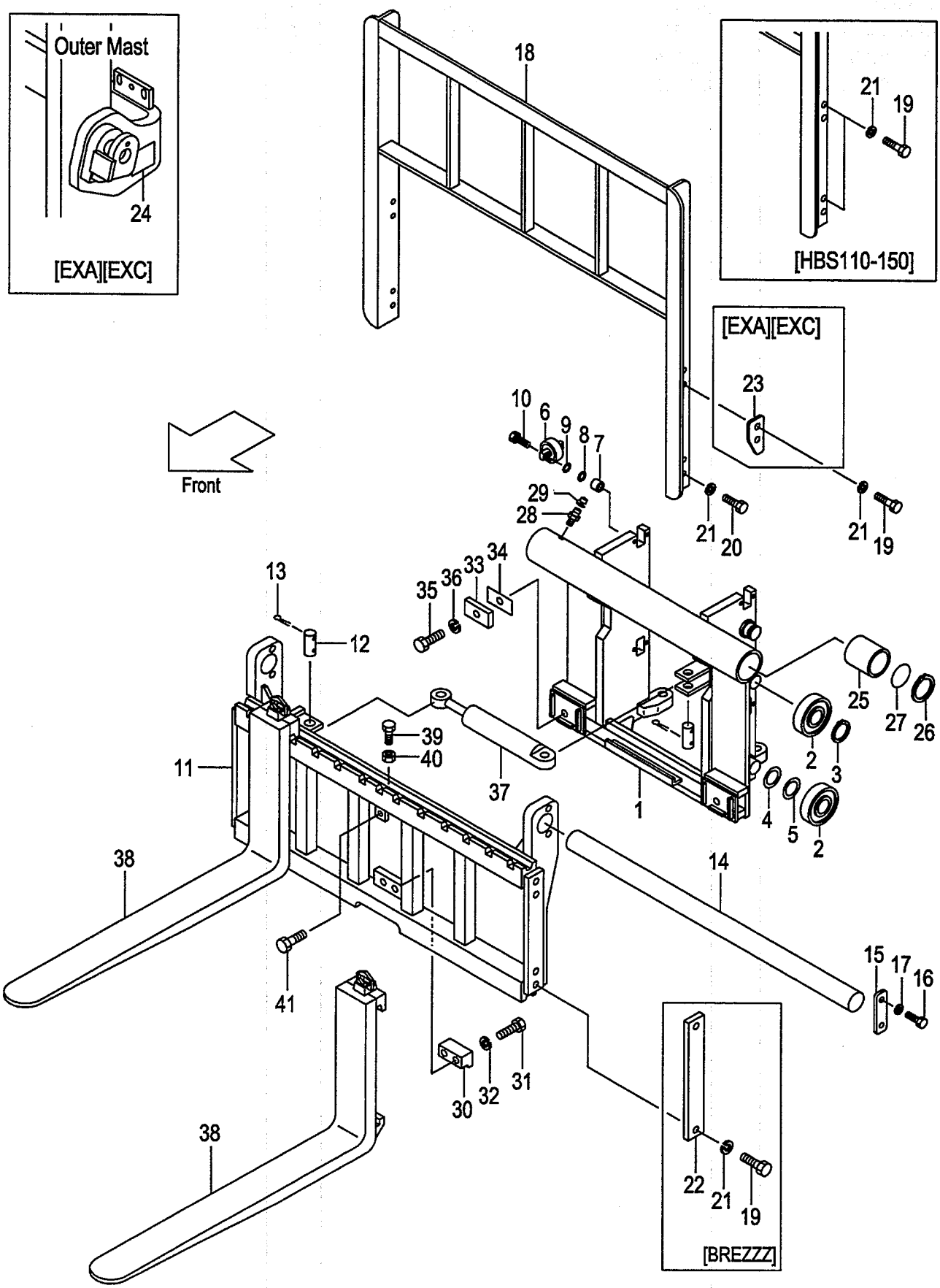

A:SS31A(VM/J)
B:SS28A(VFM/J)
C:SS29A(VFHM/J)

FIG.9
(A503SS10)

Item No	Part No.	Mark	Description		Req'd	Remarks : Serial No.
-	628B6-10321		SHIFT-ASSY,SIDE	ｻｲﾄﾞｼﾌﾄｱｯｾﾝ	1	B [(FC,CS35,FCS35,45,55) /WFS] INC.1-37
-	628B6-10331		SHIFT-ASSY,SIDE	ｻｲﾄﾞｼﾌﾄｱｯｾﾝ	1	B [(FC,CS35,FCS35,45,55) /WFS/BREZZZ] INC.1-37
-	628B6-10341		SHIFT-ASSY,SIDE	ｻｲﾄﾞｼﾌﾄｱｯｾﾝ	1	B [(FC,CS35,FCS35,45,55) /WWS] INC.1-37
-	628B6-10351		SHIFT-ASSY,SIDE	ｻｲﾄﾞｼﾌﾄｱｯｾﾝ	1	B [(FC,CS35,FCS35,45,55) /WWS/BREZZZ] INC.1-37
-	629B6-10001		SHIFT-ASSY,SIDE	ｻｲﾄﾞｼﾌﾄｱｯｾﾝ	1	C INC.1-37
-	629B6-10011		SHIFT-ASSY,SIDE	ｻｲﾄﾞｼﾌﾄｱｯｾﾝ	1	C [BREZZZ] INC.1-37
-	629B6-10021		SHIFT-ASSY,SIDE	ｻｲﾄﾞｼﾌﾄｱｯｾﾝ	1	C [WFS] INC.1-37
-	629B6-10031		SHIFT-ASSY,SIDE	ｻｲﾄﾞｼﾌﾄｱｯｾﾝ	1	C [WFS/BREZZZ] INC.1-37
-	629B6-10041		SHIFT-ASSY,SIDE	ｻｲﾄﾞｼﾌﾄｱｯｾﾝ	1	C [WWS] INC.1-37
-	629B6-10051		SHIFT-ASSY,SIDE	ｻｲﾄﾞｼﾌﾄｱｯｾﾝ	1	C [WWS/BREZZZ] INC.1-37
-	629B6-10301		SHIFT-ASSY,SIDE	ｻｲﾄﾞｼﾌﾄｱｯｾﾝ	1	C [FC][CS35][FCS35][FCS45] [FCS55] INC.1-37
-	629B6-10311		SHIFT-ASSY,SIDE	ｻｲﾄﾞｼﾌﾄｱｯｾﾝ	1	C [(FC,CS35,FCS35,45,55) /BREZZZ] INC.1-37
-	629B6-10321		SHIFT-ASSY,SIDE	ｻｲﾄﾞｼﾌﾄｱｯｾﾝ	1	C [(FC,CS35,FCS35,45,55) /WFS] INC.1-37
-	629B6-10331		SHIFT-ASSY,SIDE	ｻｲﾄﾞｼﾌﾄｱｯｾﾝ	1	C [(FC,CS35,FCS35,45,55) /WFS/BREZZZ] INC.1-37
-	629B6-10341		SHIFT-ASSY,SIDE	ｻｲﾄﾞｼﾌﾄｱｯｾﾝ	1	C [(FC,CS35,FCS35,45,55) /WWS] INC.1-37
-	629B6-10351		SHIFT-ASSY,SIDE	ｻｲﾄﾞｼﾌﾄｱｯｾﾝ	1	C [(FC,CS35,FCS35,45,55) /WWS/BREZZZ] INC.1-37
1	631A6-10101		BRACKET,LIFT	ﾌﾞﾗｹｯﾄ	1	A
-	62876-10101		BRACKET,LIFT	ﾌﾞﾗｹｯﾄ	1	B
-	62976-10101		BRACKET,LIFT	ﾌﾞﾗｹｯﾄ	1	C
2	277P8-22051		ROLLER,END,SMALL	ﾛｰﾗ	6	A,B
-	277P8-22051		ROLLER,END,SMALL	ﾛｰﾗ	4	C
-	577P3-74001		ROLLER,END,SMALL	ﾛｰﾗ	6	A,B [FC][CS35][FCS35][FCS45] [FCS55]

FIG.9 SIDE SHIFT [SS28A,SS29A,SS31A]

(A503SS10) サイドシフト

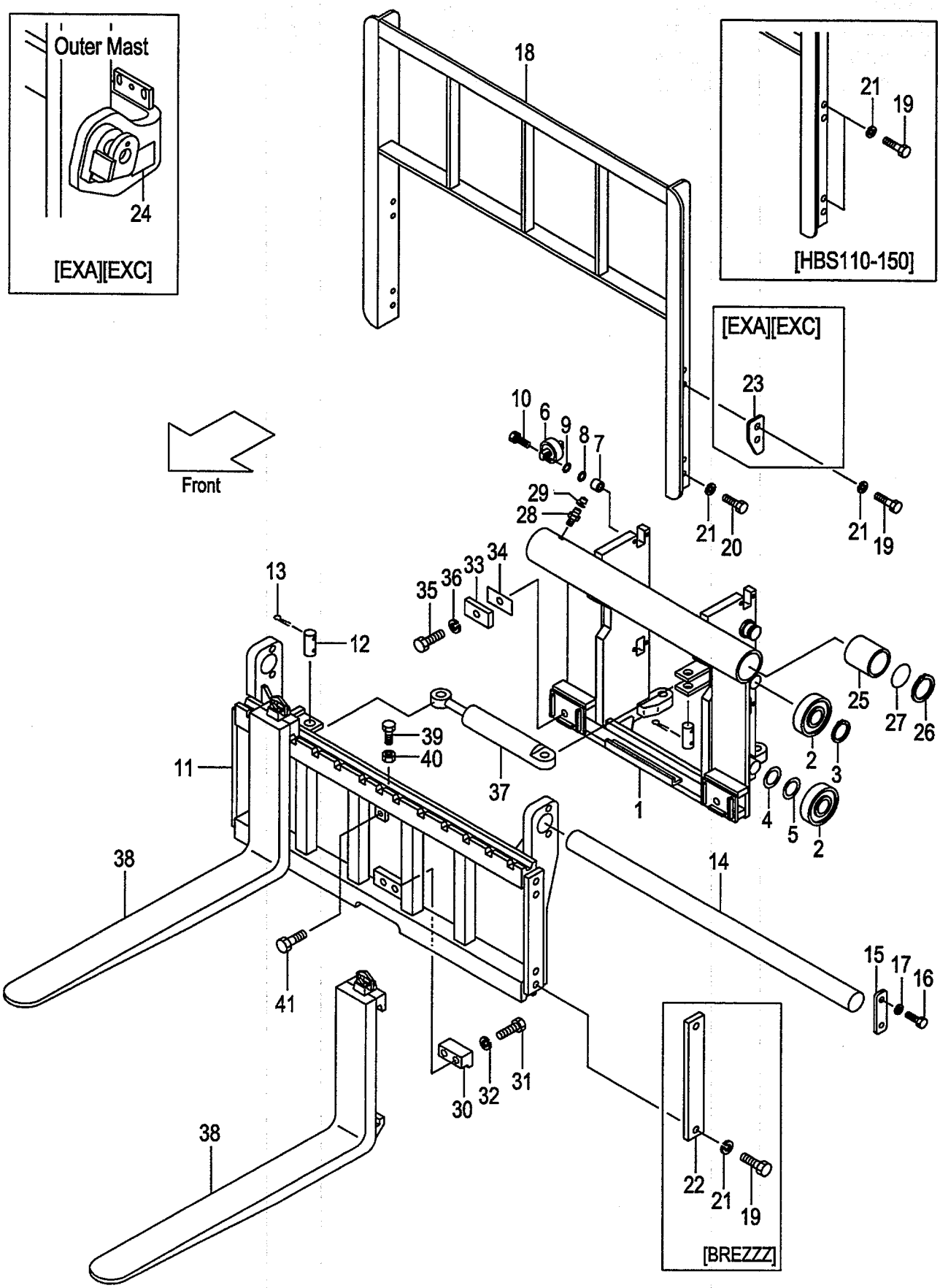

A:SS31A(VM/J)
B:SS28A(VFM/J)
C:SS29A(VFHM/J)

FIG.9
(A503SS10)

Item No	Part No.	Mark	Description		Req'd	Remarks : Serial No.
-	577P3-74001		ROLLER,END,SMALL	ローラ	4	C [FC][CS35][FCS35][FCS45] [FCS55]
-	277P8-22061		ROLLER,END,LARGE	ローラ	(4)	
-	577P3-74011		ROLLER,END,LARGE	ローラ	(4)	[FC][CS35][FCS35][FCS45] [FCS55]
3	02100-00045		RING,SNAP	スナップリング	4	A,B
-	02100-00045		RING,SNAP	スナップリング	2	C
4	277P8-22071		SHIM,T-0.5	シム	10	
5	277P8-22081		SHIM,T-1.0	シム	10	
6	23458-32052		ROLLER,SIDE	ローラ	4	
-	514A3-71702		ROLLER,SIDE	ローラ	4	[FC][CS35][FCS35][FCS45] [FCS55]
7	22548-34031		SPACER	スペーサ	8	
8	22548-34051		SHIM,T-0.5	シム	10	
9	22548-34061		SHIM,T-1.0	シム	10	
10	01184-12050		BOLT & WASHER	ボルト&ワッシャ	8	
11	63176-10201		BAR,FINGER	バー	1	
-	63176-10211		BAR,FINGER	バー	1	[WFS]
-	63176-10221		BAR,FINGER	バー	1	[WWS]
12	62516-12261		PIN	ピン	2	
-	62576-12701		PIN	ピン	2	[FC][CS35][FCS35][FCS45] [FCS55]
13	02270-06040		PIN	ピン	4	
14	63166-12321		SHAFT	シャフト	1	
-	63166-12601		SHAFT	シャフト	1	[FC][CS35][FCS35][FCS45] [FCS55]
15	62576-12311		STOPPER	ストッパ	2	
16	01100-12025		BOLT	ボルト	4	
17	02010-00012		WASHER	ワッシャ	4	
18	234F8-22201		REST,BACK	バックレスト	1	
-	534F1-64401		REST,BACK	バックレスト	1	[WFS]
-	534F1-64411		REST,BACK	バックレスト	1	[WWS]
-	534F2-74001		REST,BACK	バックレスト	1	[EXA][EXC](WITHOUT WFS,WWS)
-	234F8-22101		REST,BACK	バックレスト	1	[HBS130](WITHOUT WFS,WWS)
-	234F8-22111		REST,BACK	バックレスト	1	[HBS140](WITHOUT WFS,WWS)
-	234F8-22121		REST,BACK	バックレスト	1	[HBS150](WITHOUT WFS,WWS)
19	01100-14030		BOLT	ボルト	4	(WITHOUT BREZZZ)
-	01100-14030		BOLT	ボルト	8	[HBS](WITHOUT WFS,WWS)
-	01100-14035		BOLT	ボルト	4	[EXA][EXC](WITHOUT WFS,WWS)
20	01100-14025		BOLT	ボルト	4	(WITHOUT HBS)
21	02010-00014		WASHER	ワッシャ	8	
-	02010-00014		WASHER	ワッシャ	4	[BREZZZ]
22	24450-92021		PLATE	プレート	2	[BREZZZ]
23	534A2-74501		PLATE,STOPPER	プレート	2	[EXA][EXC](WITHOUT WFS,WWS)
24	534A2-74301		DECAL,CAUTION	デカル	2	[EXA][EXC](WITHOUT WFS,WWS)
25	62576-12351		BUSHING	ブッシング	4	
26	22678-23751		RING,SNAP	スナップリング	2	
27	03310-00600		O-RING	Oリング	2	
28	04901-00160		FITTING	フィッティング	2	

FIG.9 SIDE SHIFT [SS28A,SS29A,SS31A]

(A503SS10) サイドシフト

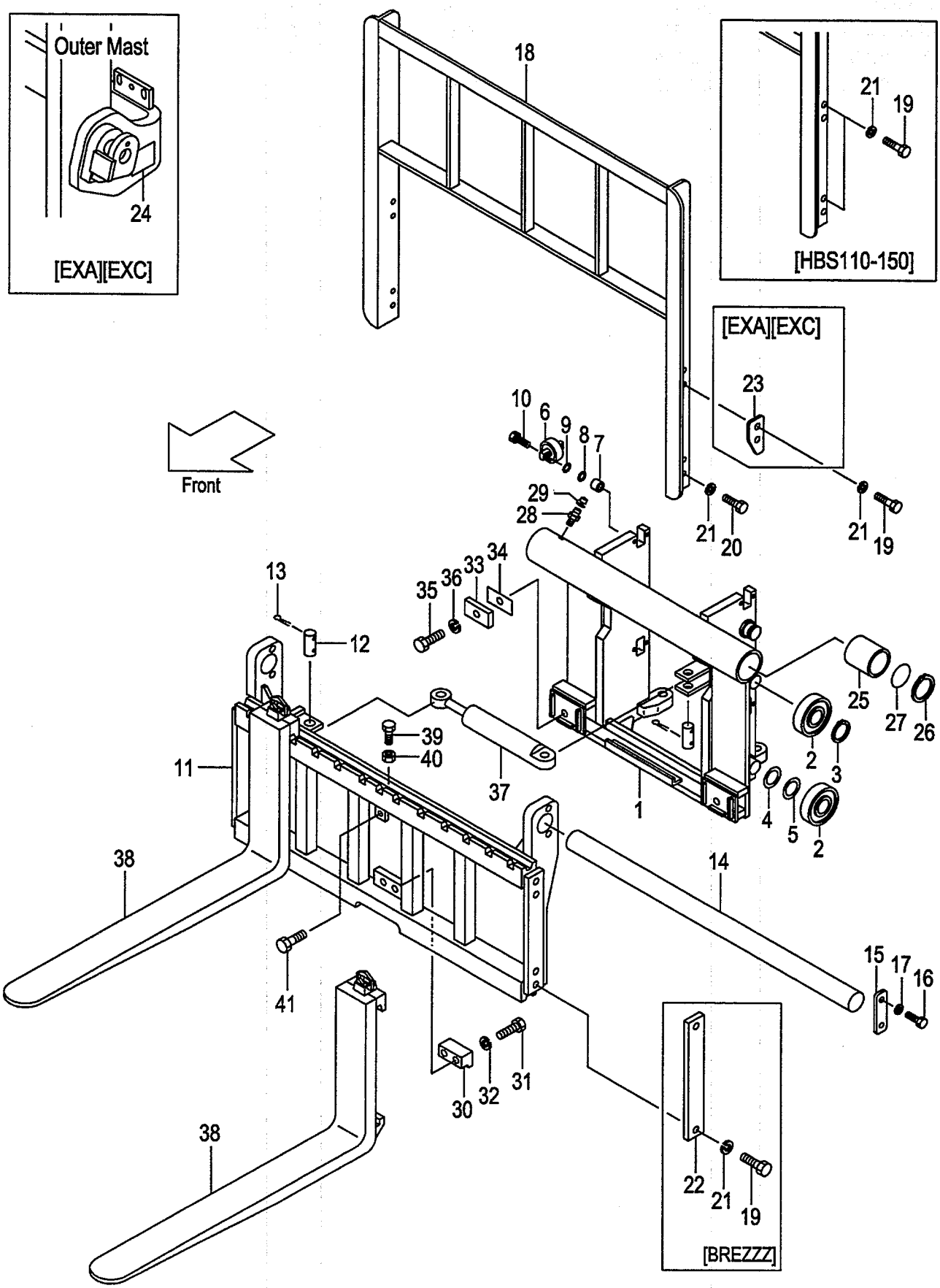

A:SS31A(VM/J)
B:SS28A(VFM/J)
C:SS29A(VFHM/J)

FIG.9
(A503SS10)

Item No	Part No.	Mark	Description		Req'd	Remarks : Serial No.
29	22199-12401		CAP	ｷｬｯﾌﾟ	2	
30	62016-12251		GUIDE	ｶﾞｲﾄﾞ	1	
31	01100-16055		BOLT	ﾎﾞﾙﾄ	2	
32	02010-00016		WASHER	ﾜｯｼｬ	2	
33	62576-12301		BUSHING	ﾌﾞｯｼﾝｸﾞ	2	
34	62576-12331		SHIM	ｼﾑ	AR	
35	01100-10020		BOLT	ﾎﾞﾙﾄ	2	
36	02000-00010		WASHER	ﾜｯｼｬ	2	
37	62536-10301		CYL	ｼﾘﾝﾀﾞ	1	SEE FIG.10
-	62556-10401		CYL	ｼﾘﾝﾀﾞ	1	[FC][CS35][FCS35][FCS45]
						[FCS55]SEE FIG.10
38	NO PART NO.		FORK	ﾌｫｰｸ	2	SEE (VM39F,VFM39F,VFHM39F)
39	01184-12025		BOLT	ﾎﾞﾙﾄ	1	
40	01120-08025		BOLT	ﾎﾞﾙﾄ	1	
41	01400-00008		NUT	ﾅｯﾄ	1	
42	02432-01008	+	RIVET	ﾘﾍﾞｯﾄ	4	
43	63110-18901	+	PLATE,LOAD CHART	ﾌﾟﾚｰﾄ	1	
-	514A3-82301	+	PLATE,LOAD CHART	ﾌﾟﾚｰﾄ	1	(ENGLISH)
-	514A3-82321	+	PLATE,LOAD CHART	ﾌﾟﾚｰﾄ	1	(GERMAN)
-	514A3-82341	+	PLATE,LOAD CHART	ﾌﾟﾚｰﾄ	1	(FRENCH)
-	514A3-82331	+	PLATE,LOAD CHART	ﾌﾟﾚｰﾄ	1	(SPANISH)
-	514A3-82361	+	PLATE,LOAD CHART	ﾌﾟﾚｰﾄ	1	(DANISH)
-	514A3-82381	+	PLATE,LOAD CHART	ﾌﾟﾚｰﾄ	1	(GREEK)
-	514A3-82371	+	PLATE,LOAD CHART	ﾌﾟﾚｰﾄ	1	(ITALIAN)
-	514A3-82351	+	PLATE,LOAD CHART	ﾌﾟﾚｰﾄ	1	(DUTCH)
-	514A3-82391	+	PLATE,LOAD CHART	ﾌﾟﾚｰﾄ	1	(PORTUGUESE)
44	09210-10300	+	PLATE,NAME	ﾌﾟﾚｰﾄ	1	
-	09210-10300	+	PLATE,NAME	ﾌﾟﾚｰﾄ	1	(ENGLISH)
-	63110-19211	+	PLATE,NAME	ﾌﾟﾚｰﾄ	1	(GERMAN)
-	63110-19251	+	PLATE,NAME	ﾌﾟﾚｰﾄ	1	(FRENCH)
-	63110-19231	+	PLATE,NAME	ﾌﾟﾚｰﾄ	1	(SPANISH)
-	63110-19291	+	PLATE,NAME	ﾌﾟﾚｰﾄ	1	(DANISH)
-	63110-19331	+	PLATE,NAME	ﾌﾟﾚｰﾄ	1	(GREEK)
-	63110-19311	+	PLATE,NAME	ﾌﾟﾚｰﾄ	1	(ITALIAN)
-	63110-19271	+	PLATE,NAME	ﾌﾟﾚｰﾄ	1	(DUTCH)
-	63110-19351	+	PLATE,NAME	ﾌﾟﾚｰﾄ	1	(PORTUGUESE)
45	63110-19811	+	DECAL	ﾃﾞｶﾙ	1	
46	214A7-42181	+	KNOB	ﾉﾌﾞ	1	
47	62056-12651	+	DECAL	ﾃﾞｶﾙ	2	
48	62576-17001	+	DECAL,CAUTION	ﾃﾞｶﾙ	1	
-	62576-12961	+	DECAL,CAUTION	ﾃﾞｶﾙ	1	(ENGLISH)
-	62576-12971	+	DECAL,CAUTION	ﾃﾞｶﾙ	1	(GERMAN)
-	62576-12991	+	DECAL,CAUTION	ﾃﾞｶﾙ	1	(FRENCH)
-	62576-12981	+	DECAL,CAUTION	ﾃﾞｶﾙ	1	(SPANISH)
-	62576-13011	+	DECAL,CAUTION	ﾃﾞｶﾙ	1	(DANISH)
-	62576-13031	+	DECAL,CAUTION	ﾃﾞｶﾙ	1	(GREEK)
-	62576-13021	+	DECAL,CAUTION	ﾃﾞｶﾙ	1	(ITALIAN)
-	62576-13001	+	DECAL,CAUTION	ﾃﾞｶﾙ	1	(DUTCH)
-	62576-13041	+	DECAL,CAUTION	ﾃﾞｶﾙ	1	(PORTUGUESE)
49	62A66-17001	+	DECAL,CAUTION	ﾃﾞｶﾙ	2	

FIG.10 CYLINDER [SS28A,SS29A,SS31A]

(A503SS20) ｼﾘﾝﾀﾞ

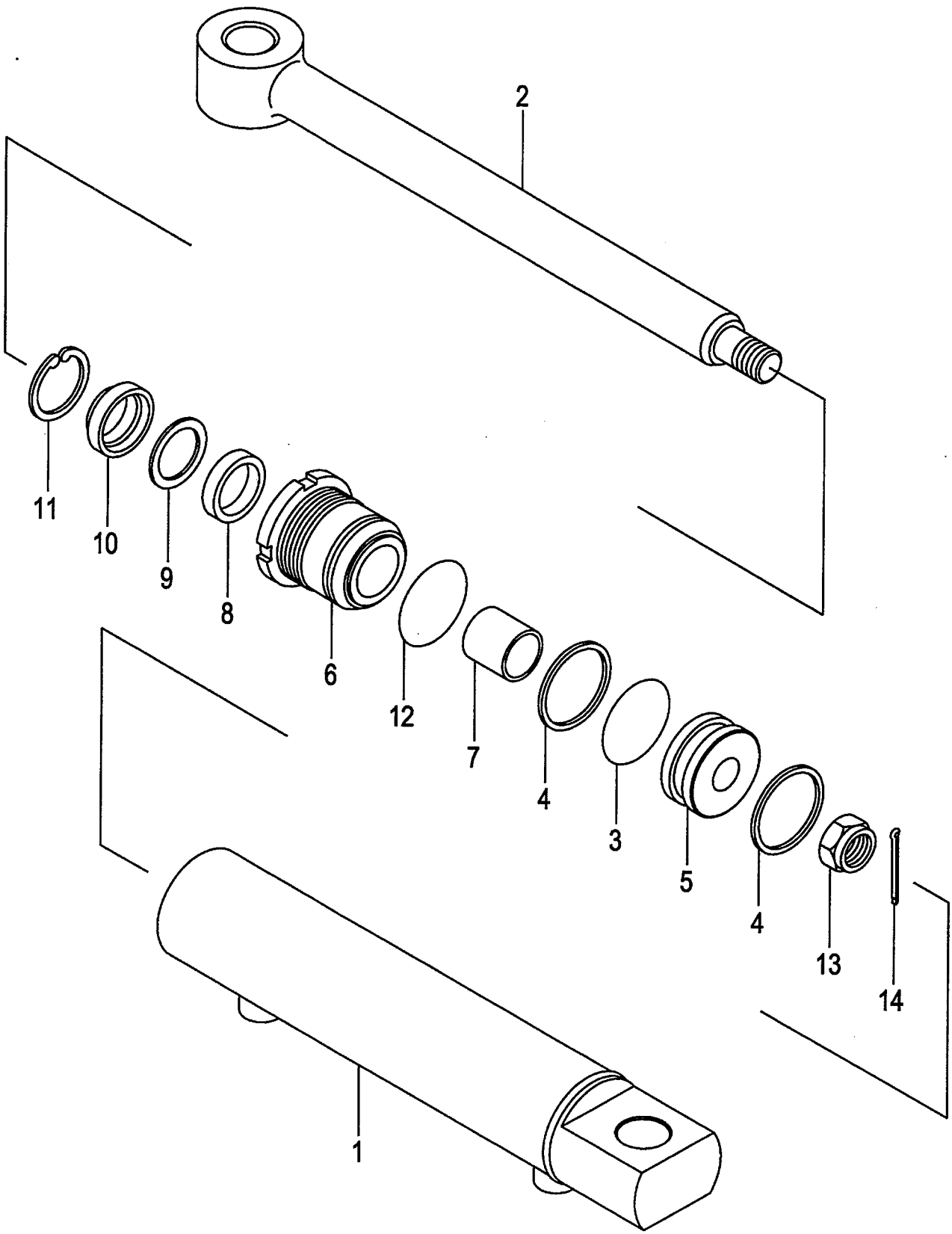

A:SS31A(VM/J)
B:SS28A(VFM/J)
C:SS29A(VFHM/J)

FIG.10
(A503SS20)

Item No	Part No.	Mark	Description		Req'd	Remarks : Serial No.
A1	62536-10301		CYL-ASSY	ｼﾘﾝﾀﾞｱｯｾﾝ	1	INC.1-14
-	62556-10401		CYL-ASSY	ｼﾘﾝﾀﾞｱｯｾﾝ	1	[FC][CS35][FCS35][FCS45] [FCS55] INC.1-14
1	62546-10321		TUBE	ﾁｭｰﾌﾞ	1	
2	62546-10311		ROD,PISTON	ﾛｯﾄﾞ	1	
3	03300-00390	*	O-RING	Oﾘﾝｸﾞ	1	
-	27948-52001	*	O-RING	Oﾘﾝｸﾞ	1	[FC][CS35][FCS35][FCS45] [FCS55]
4	27738-52091	*	RING,BACK-UP	ﾘﾝｸﾞ	2	
-	27978-52211	*	RING,BACK-UP	ﾘﾝｸﾞ	2	[FC][CS35][FCS35][FCS45] [FCS55]
5	62546-12191		PISTON	ﾋﾟｽﾄﾝ	1	
A2	62546-10341		CAP-ASSY	ｷｬｯﾌﾟｱｯｾﾝ	1	INC.6-12
-	62556-10411		CAP-ASSY	ｷｬｯﾌﾟｱｯｾﾝ	1	[FC][CS35][FCS35][FCS45] [FCS55] INC.6-12
6	62546-12201		CAP	ｷｬｯﾌﾟ	1	
7	25594-52411		BUSHING	ﾌﾞｯｼﾝｸﾞ	1	
8	25594-52371	*	PACKING	ﾊﾟｯｷﾝｸﾞ	1	
-	59505-54031	*	PACKING	ﾊﾟｯｷﾝｸﾞ	1	[FC][CS35][FCS35][FCS45] [FCS55]
9	62546-12211	*	RING,BACK-UP	ﾘﾝｸﾞ	1	
-	59505-54041	*	RING,BACK-UP	ﾘﾝｸﾞ	1	[FC][CS35][FCS35][FCS45] [FCS55]
10	25594-52381	*	SEAL,DUST	ｼｰﾙ	1	
-	59505-54051	*	SEAL,DUST	ｼｰﾙ	1	[FC][CS35][FCS35][FCS45] [FCS55]
11	25594-52391	*	RING,SNAP	ｽﾅｯﾌﾟﾘﾝｸﾞ	1	
12	03350-00400	*	O-RING	Oﾘﾝｸﾞ	1	
-	59565-54031	*	O-RING	Oﾘﾝｸﾞ	1	[FC][CS35][FCS35][FCS45] [FCS55]
13	01412-10016		NUT	ﾅｯﾄ	1	
14	02200-04030		PIN,COTTER	ﾋﾟﾝ	1	
K1	62536-19801		KIT,REPAIR	ﾘﾍﾟｱｷｯﾄ	1	INC.3,4,8-12
-	62556-19801		KIT,REPAIR	ﾘﾍﾟｱｷｯﾄ	1	[FC][CS35][FCS35][FCS45] [FCS55] INC.3,4,8-12

FIG.11 HYDRAULIC LINE (CONNECTOR-CYLINDER)

(A503SS30) ﾊｲﾄﾞﾛﾘｯｸﾗｲﾝ (ｺﾈｸﾀｰｼﾘﾝﾀﾞ)

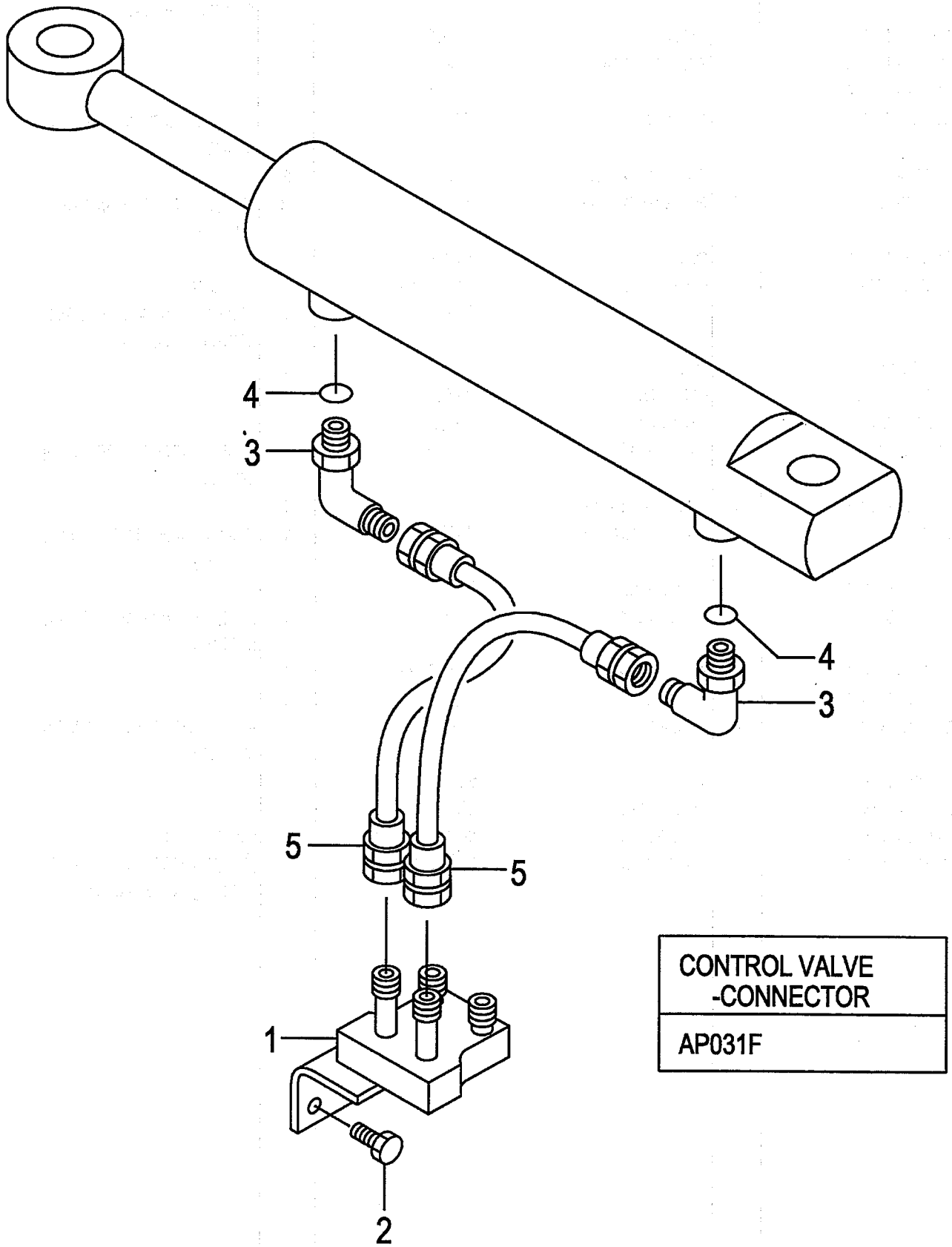

FIG.11
(A503SS30)

A:SS31A(VM/J)

Item No	Part No.	Mark	Description		Req'd	Remarks : Serial No.
1	621F0-12061		STUD	ｽﾀｯﾄﾞ	1	
2	01184-10025		BOLT & WASHER	ﾎﾞﾙﾄ&ﾜｯｼｬ	2	
3	04150-00202		ELBOW	ｴﾙﾎﾞ	2	
4	03320-00110		O-RING	Oﾘﾝｸﾞ	2	
5	63130-31050		HOSE	ﾎｰｽ	2	

FIG.12 HYDRAULIC LINE (CONNECTOR-CYLINDER)[VFM,VFHM]

(A503SS40) ﾊｲﾄﾞﾛﾘｯｸﾗｲﾝ (ｺﾈｸﾀｰｼﾘﾝﾀﾞ)

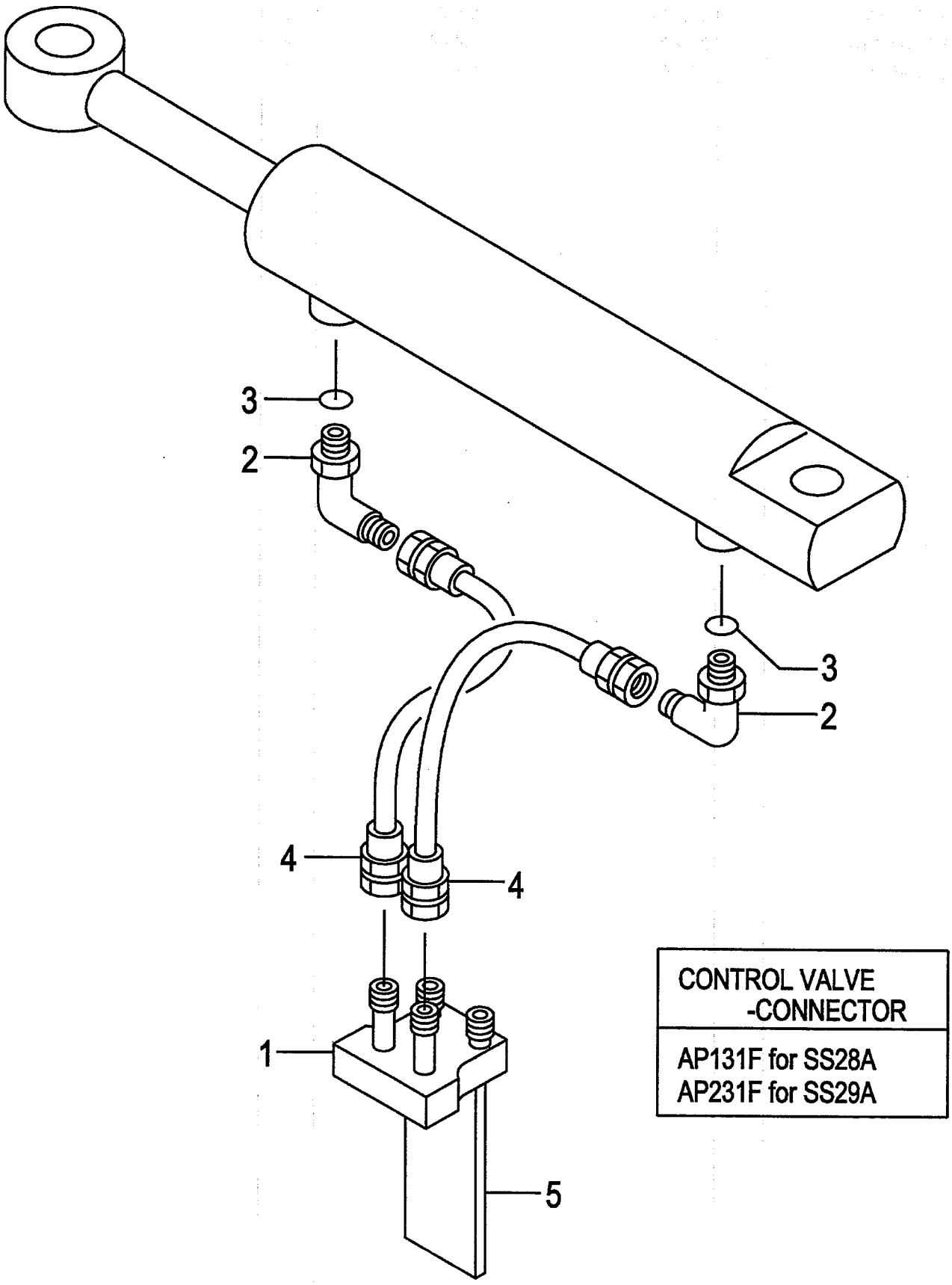

A:SS28A(VFM/J)
B:SS29A(VFHM/J)

FIG.12
(A503SS40)

Item No	Part No.	Mark	Description		Req'd	Remarks : Serial No.
1	63130-11501		STUD	ｽﾀｯﾄﾞ	1	
2	04150-00202		ELBOW	ｴﾙﾎﾞ	2	
3	03320-00110		O-RING	Oﾘﾝｸﾞ	2	
4	63130-31035		HOSE	ﾎｰｽ	1	
5	62286-12201		PLATE	ﾌﾟﾚｰﾄ	1	

FIG.13 SIDE SHIFT [SS3A8]

(A503SS50) サイドシフト

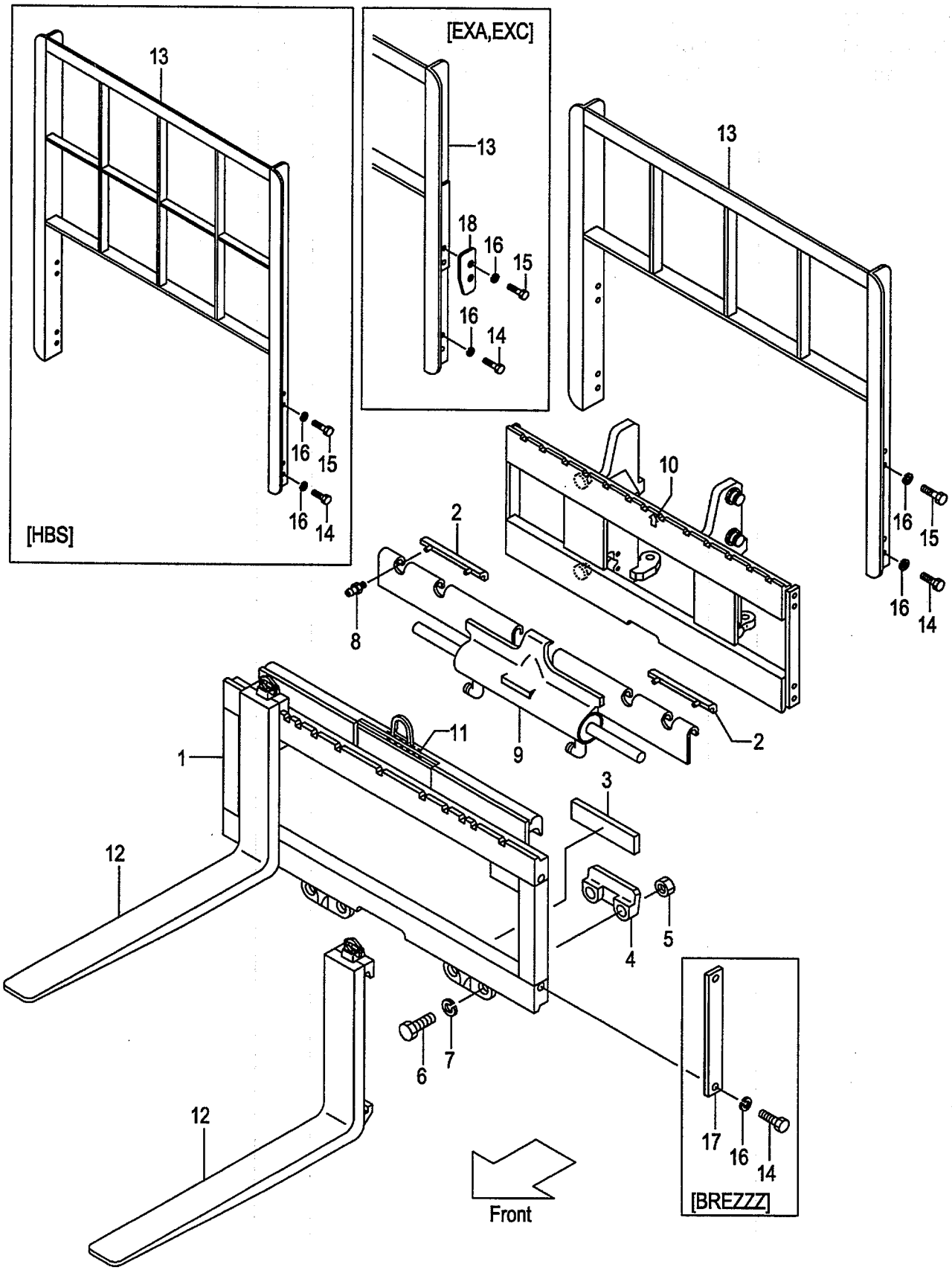

A:SS3A8(55E/J)

Item No	Part No.	Mark	Description		Req'd	Remarks : Serial No.
A1	63A86-10011		SHIFT-ASSY,SIDE	ｻｲﾄﾞｼﾌﾄｱｯｾﾝ	1	INC.1-9
1	NO PART NO.	#	BAR,FINGER	ﾊﾞｰ	1	
2	W-672018		BRG,UPPER	ﾍﾞｱﾘﾝｸﾞ	2	
3	W-208350		BRG,LOWER	ﾍﾞｱﾘﾝｸﾞ	2	
4	W-204186		HOOK	ﾌｯｸ	2	
5	W-553857		NUT	ﾅｯﾄ	4	
6	W-639121		BOLT	ﾎﾞﾙﾄ	4	
7	W-667225		WASHER	ﾜｯｼｬ	4	
8	W-7403		FITTING	ﾌｨｯﾃｨﾝｸﾞ	2	
9	W-583971		CYL	ｼﾘﾝﾀﾞ	1	SEE FIG.14
10	62056-12651		DECAL	ﾃﾞｶﾙ	1	
11	62056-12661		DECAL	ﾃﾞｶﾙ	1	
12	NO PART NO.		FORK	ﾌｫｰｸ	2	SEE (VM39F,VFM39F,VFHM39F)
13	234F8-22201		BACKREST	ﾊﾞｯｸﾚｽﾄ	1	
-	534F2-74001		BACKREST	ﾊﾞｯｸﾚｽﾄ	1	[EXA][EXC]
-	234F8-22101		BACKREST	ﾊﾞｯｸﾚｽﾄ	1	[HBS130]
-	234F8-22111		BACKREST	ﾊﾞｯｸﾚｽﾄ	1	[HBS140]
-	234F8-22121		BACKREST	ﾊﾞｯｸﾚｽﾄ	1	[HBS150]
14	01100-14025		BOLT	ﾎﾞﾙﾄ	4	
-	01100-14030		BOLT	ﾎﾞﾙﾄ	4	[HBS]
-	01100-14025		BOLT	ﾎﾞﾙﾄ	2	[BREZZZ]
15	01100-14030		BOLT	ﾎﾞﾙﾄ	4	
-	01100-14035		BOLT	ﾎﾞﾙﾄ	4	[EXA][EXC]
-	01100-14025		BOLT	ﾎﾞﾙﾄ	2	[BREZZZ]
16	02010-00014		WASHER	ﾜｯｼｬ	8	
-	02010-00014		WASHER	ﾜｯｼｬ	4	[BREZZZ]
17	24450-92021		PLATE,SIDE	ﾌﾟﾚｰﾄ	2	[BREZZZ]
18	01120-08025		BOLT	ﾎﾞﾙﾄ	1	
19	01400-00008		NUT	ﾅｯﾄ	1	
20	534A2-74051		PLATE,STOPPER	ﾌﾟﾚｰﾄ	2	[EXA][EXC]
21	534A2-74301	+	DECAL,CAUTION	ﾃﾞｶﾙ	1	[EXA][EXC]
22	02432-01008	+	RIVET	ﾘﾍﾞｯﾄ	4	
23	63110-18901	+	PLATE,LOAD CHART	ﾌﾟﾚｰﾄ	1	
-	514A3-82301	+	PLATE,LOAD CHART	ﾌﾟﾚｰﾄ	1	(ENGLISH)
-	63110-18911	+	PLATE,LOAD CHART	ﾌﾟﾚｰﾄ	1	(ENGLISH)
-	524T3-84031	+	PLATE,LOAD CHART	ﾌﾟﾚｰﾄ	1	(RUSSIAN)
-	63110-18921	+	PLATE,LOAD CHART	ﾌﾟﾚｰﾄ	1	(CHINESE)
-	514A3-82321	+	PLATE,LOAD CHART	ﾌﾟﾚｰﾄ	1	(GERMAN)
-	514A3-82341	+	PLATE,LOAD CHART	ﾌﾟﾚｰﾄ	1	(FRENCH)
-	514A3-82331	+	PLATE,LOAD CHART	ﾌﾟﾚｰﾄ	1	(SPANISH)
-	514A3-82361	+	PLATE,LOAD CHART	ﾌﾟﾚｰﾄ	1	(DANISH)
-	514A3-82381	+	PLATE,LOAD CHART	ﾌﾟﾚｰﾄ	1	(GREEK)
-	514A3-82371	+	PLATE,LOAD CHART	ﾌﾟﾚｰﾄ	1	(ITALIAN)
-	514A3-82351	+	PLATE,LOAD CHART	ﾌﾟﾚｰﾄ	1	(DUTCH)
-	514A3-82391	+	PLATE,LOAD CHART	ﾌﾟﾚｰﾄ	1	(PORTUGUESE)
24	09210-10300	+	PLATE,NAME	ﾌﾟﾚｰﾄ	1	
-	09210-10300	+	PLATE,NAME	ﾌﾟﾚｰﾄ	1	(ENGLISH)
-	63110-32111	+	PLATE,NAME	ﾌﾟﾚｰﾄ	1	(RUSSIAN)
-	09201-06201	+	PLATE,NAME	ﾌﾟﾚｰﾄ	1	(CHINESE)
-	63110-19211	+	PLATE,NAME	ﾌﾟﾚｰﾄ	1	(GERMAN)

FIG.13 SIDE SHIFT [SS3A8]

(A503SS50) サイドシフト

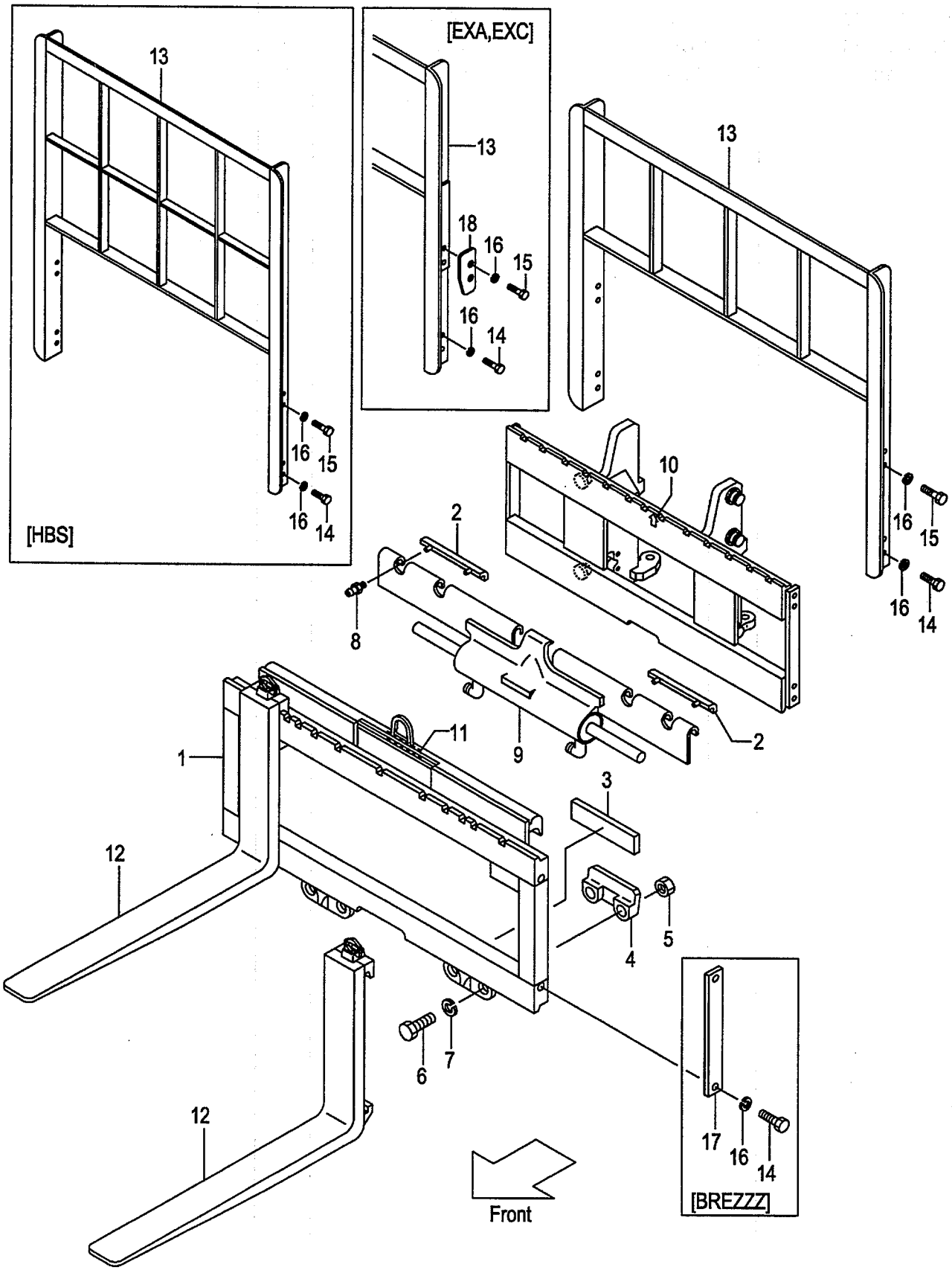

FIG.13
(A503SS50)

A:SS3A8(55E/J)

Item No	Part No.	Mark	Description		Req'd	Remarks : Serial No.
-	63110-19251	+	PLATE,NAME	ﾌﾟﾚｰﾄ	1	(FRENCH)
-	63110-19231	+	PLATE,NAME	ﾌﾟﾚｰﾄ	1	(SPANISH)
-	63110-19291	+	PLATE,NAME	ﾌﾟﾚｰﾄ	1	(DANISH)
-	63110-19331	+	PLATE,NAME	ﾌﾟﾚｰﾄ	1	(GREEK)
-	63110-19311	+	PLATE,NAME	ﾌﾟﾚｰﾄ	1	(ITALIAN)
-	63110-19271	+	PLATE,NAME	ﾌﾟﾚｰﾄ	1	(DUTCH)
-	63110-19351	+	PLATE,NAME	ﾌﾟﾚｰﾄ	1	(PORTUGUESE)
25	63110-19811	+	DECAL	ﾃﾞｶﾙ	1	
26	214A7-42181	+	KNOB	ﾉﾌﾞ	1	
27	62576-17001	+	DECAL,CAUTION	ﾃﾞｶﾙ	1	
-	62576-12961	+	DECAL,CAUTION	ﾃﾞｶﾙ	1	(ENGLISH)
-	62576-12971	+	DECAL,CAUTION	ﾃﾞｶﾙ	1	(GERMAN)
-	62576-12991	+	DECAL,CAUTION	ﾃﾞｶﾙ	1	(FRENCH)
-	62576-12981	+	DECAL,CAUTION	ﾃﾞｶﾙ	1	(SPANISH)
-	62576-13011	+	DECAL,CAUTION	ﾃﾞｶﾙ	1	(DANISH)
-	62576-13031	+	DECAL,CAUTION	ﾃﾞｶﾙ	1	(GREEK)
-	62576-13021	+	DECAL,CAUTION	ﾃﾞｶﾙ	1	(ITALIAN)
-	62576-13001	+	DECAL,CAUTION	ﾃﾞｶﾙ	1	(DUTCH)
-	62576-13041	+	DECAL,CAUTION	ﾃﾞｶﾙ	1	(PORTUGUESE)
28	62A66-17001	+	DECAL,CAUTION	ﾃﾞｶﾙ	2	(WITHOUT/(EXA,EXB,EXC,EXD, EXE,EXN))

FIG.14 CYLINDER [SS3A8]

(A503SS60) ｼﾘﾝﾀﾞ

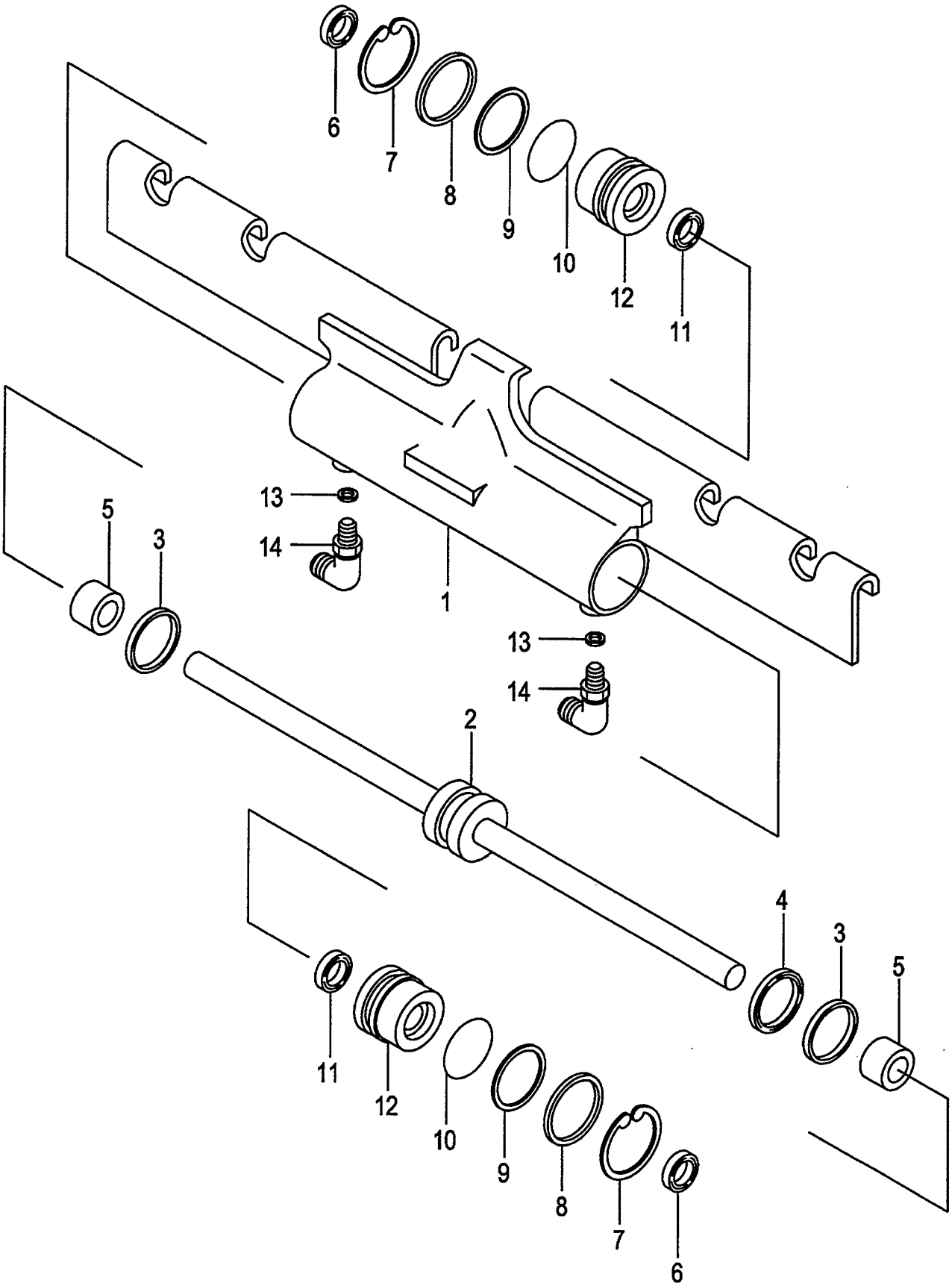

FIG.14
(A503SS60)

A:SS3A8(55E/J)

Item No	Part No.	Mark	Description		Req'd	Remarks : Serial No.
A1	W-583971		CYL-ASSY	ｼﾘﾝﾀﾞｱｯｾﾝ	1	INC.1-14
1	NO PART NO.	#	TUBE	ﾁｭｰﾌﾞ	1	
2	W-562055		ROD	ﾛｯﾄﾞ	1	
3	W-563278	*	RING,BEARING	ﾘﾝｸﾞ	2	
4	W-563469	*	SEAL,PISTON	ｼｰﾙ	1	
5	NO PART NO.		SPACER	ｽﾍﾟｰｻ	2	
6	W-562131	*	SEAL,WIPER	ｼｰﾙ	2	
7	W-562951		RING,SNAP	ｽﾅｯﾌﾟﾘﾝｸﾞ	2	
8	W-562942		RING,RETAINING	ﾘﾝｸﾞ	2	
9	W-563388	*	RING,BACK-UP	ﾘﾝｸﾞ	2	
10	W-562127	*	O-RING	Oﾘﾝｸﾞ	2	
11	W-562132	*	SEAL,ROD	ｼｰﾙ	2	
12	W-562792		RETAINER	ﾘﾃｰﾅ	2	
13	W-206488		WASHER	ﾜｯｼｬ	2	
14	W-601676		ELBOW JIC 6-6	ｴﾙﾎﾞ	2	
-	W-666984		ELBOW JIC 6-4	ｴﾙﾎﾞ	2	
K1	W-563487		KIT,SERVICE	ｻｰﾋﾞｽｷｯﾄ	1	INC.3,4,6,9-11

FIG.15 HYDRAULIC LINE (CONNECTOR-CYLINDER)

(A503SS70) ﾊｲﾄﾞﾛﾘｯｸﾗｲﾝ (ｺﾈｸﾀｰｼﾘﾝﾀﾞｰ)

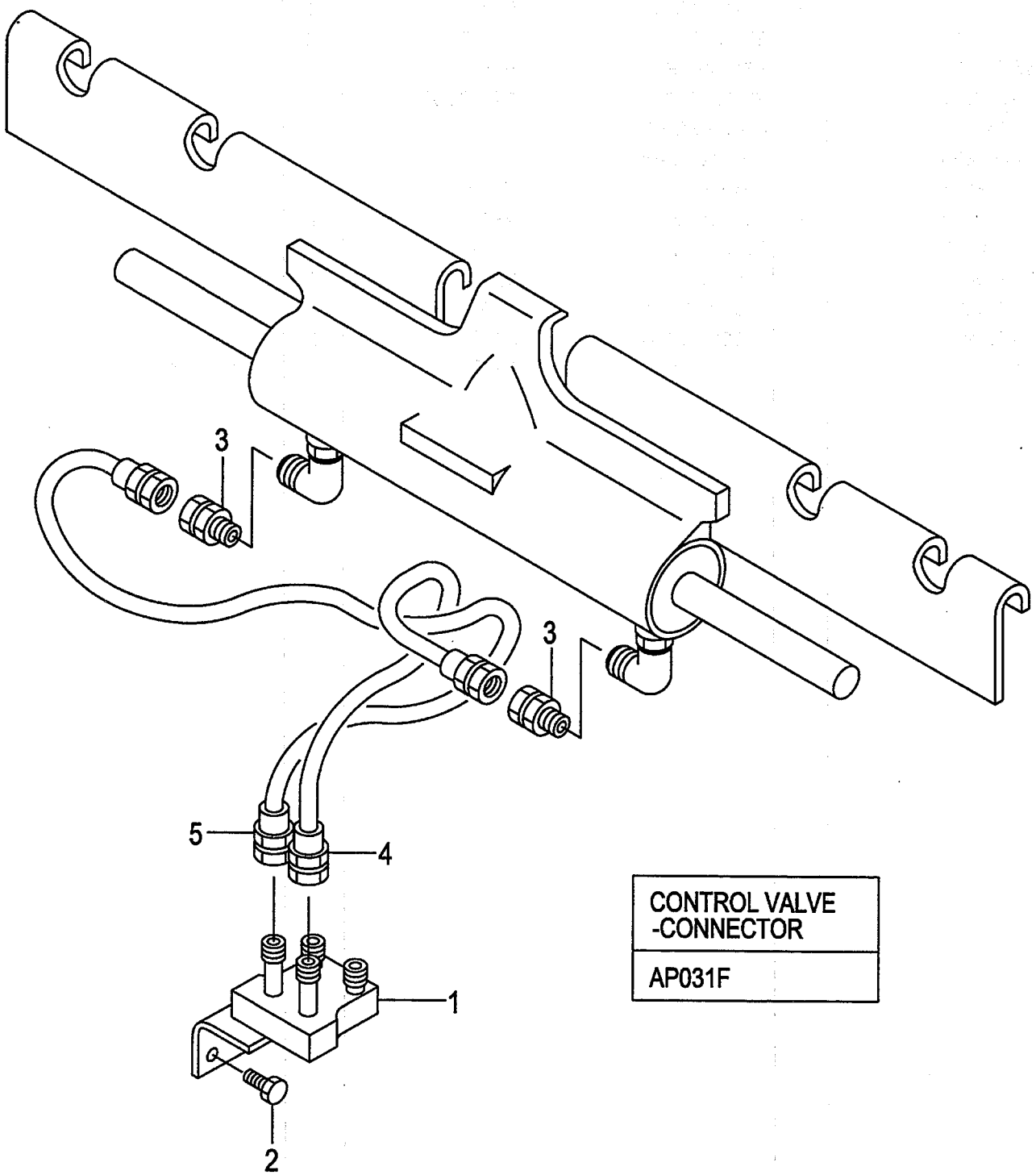

CONTROL VALVE -CONNECTOR
AP031F

FIG.15
(A503SS70)

A:SS3A8(55E/J)

Item No	Part No.	Mark	Description		Req'd	Remarks : Serial No.
1	621F0-12061		STUD	ｽﾀｯﾄﾞ	1	
2	01184-10025		BOLT	ﾎﾞﾙﾄ	2	
3	97050-01850		UNION	ﾕﾆｵﾝ	2	
4	63130-31050		HOSE	ﾎｰｽ	1	
5	63130-31040		HOSE	ﾎｰｽ	1	

FIG.16 HYDRAULIC LINE (CONNECTOR-CYLINDER)[VFM,VFHM]

(A503SS80) ﾊｲﾄﾞﾛﾘｯｸﾗｲﾝ (ｺﾈｸﾀｰｼﾘﾝﾀﾞ)

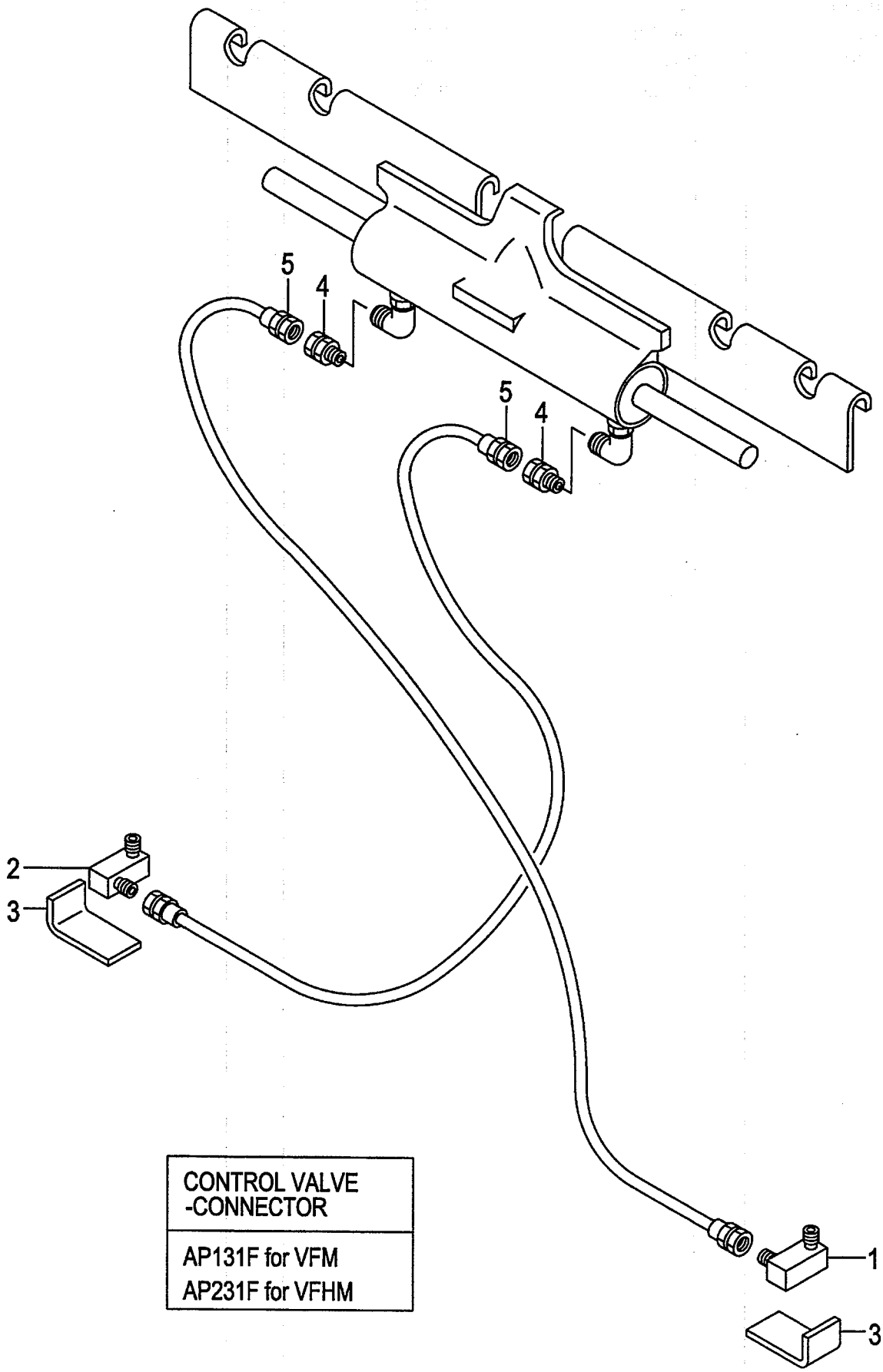

CONTROL VALVE -CONNECTOR
AP131F for VFM AP231F for VFHM

FIG.16
(A503SS80)

A:SS3A8(55E/J)

Item No	Part No.	Mark	Description		Req'd	Remarks : Serial No.
1	63110-14731		STUD	ｽﾀｯﾄﾞ	1	
2	63110-14751		STUD	ｽﾀｯﾄﾞ	1	
3	62150-12001		ANGLE	ｱﾝｸﾞﾙ	2	[VFM]
4	97050-01850		UNION	ﾕﾆｵﾝ	2	
5	63130-21080		HOSE	ﾎｰｽ	2	

FIG.17 FORK SHIFT [FS20A,FS22A,FS23A]

(A502FS10) フォークシフト

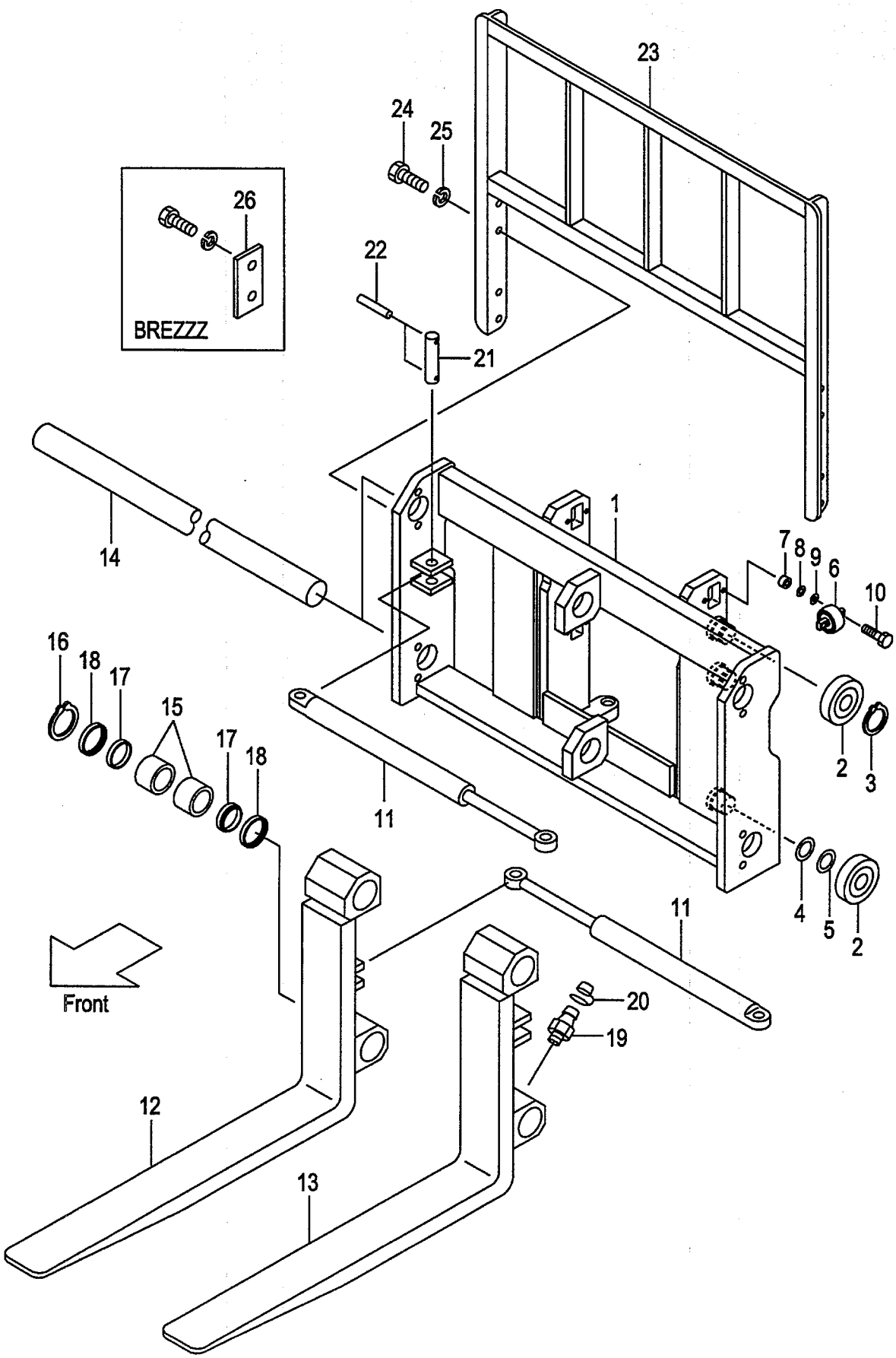

A:FS20A(VM/J)
B:FS22A(VFM/J)
C:FS23A(VFHM/J)

FIG.17
(A502FS10)

Item No	Part No.	Mark	Description		Req'd	Remarks : Serial No.
A1	620A3-80001		SHIFT-ASSY,FORK	ﾌｫｰｸｼﾌﾄｱｯｾﾝ	1	A [LFS092](2T) INC.1-26
-	620A3-80011		SHIFT-ASSY,FORK	ﾌｫｰｸｼﾌﾄｱｯｾﾝ	1	A [LFS107](2-2.5T) INC.1-26
-	620A3-80021		SHIFT-ASSY,FORK	ﾌｫｰｸｼﾌﾄｱｯｾﾝ	1	A [LFS122](2-2.5T) INC.1-26
-	620A3-80031		SHIFT-ASSY,FORK	ﾌｫｰｸｼﾌﾄｱｯｾﾝ	1	A [LFS137](2-2.5T) INC.1-26
-	620A3-80041		SHIFT-ASSY,FORK	ﾌｫｰｸｼﾌﾄｱｯｾﾝ	1	A [LFS152](2-2.5T) INC.1-26
-	620A3-80051		SHIFT-ASSY,FORK	ﾌｫｰｸｼﾌﾄｱｯｾﾝ	1	A [LFS167](2-2.5T) INC.1-26
-	620A3-80061		SHIFT-ASSY,FORK	ﾌｫｰｸｼﾌﾄｱｯｾﾝ	1	A [LFS182](2-2.5T) INC.1-26
-	622A3-80001		SHIFT-ASSY,FORK	ﾌｫｰｸｼﾌﾄｱｯｾﾝ	1	B [LFS092](2T) INC.1-26
-	622A3-80011		SHIFT-ASSY,FORK	ﾌｫｰｸｼﾌﾄｱｯｾﾝ	1	B [LFS107](2-2.5T) INC.1-26
-	622A3-80021		SHIFT-ASSY,FORK	ﾌｫｰｸｼﾌﾄｱｯｾﾝ	1	B [LFS122](2-2.5T) INC.1-26
-	622A3-80031		SHIFT-ASSY,FORK	ﾌｫｰｸｼﾌﾄｱｯｾﾝ	1	B [LFS137](2-2.5T) INC.1-26
-	622A3-80041		SHIFT-ASSY,FORK	ﾌｫｰｸｼﾌﾄｱｯｾﾝ	1	B [LFS152](2-2.5T) INC.1-26
-	622A3-80051		SHIFT-ASSY,FORK	ﾌｫｰｸｼﾌﾄｱｯｾﾝ	1	B [LFS167](2-2.5T) INC.1-26
-	622A3-80061		SHIFT-ASSY,FORK	ﾌｫｰｸｼﾌﾄｱｯｾﾝ	1	B [LFS182](2-2.5T) INC.1-26
-	623A3-80001		SHIFT-ASSY,FORK	ﾌｫｰｸｼﾌﾄｱｯｾﾝ	1	C [LFS092](2T) INC.1-26
-	623A3-80011		SHIFT-ASSY,FORK	ﾌｫｰｸｼﾌﾄｱｯｾﾝ	1	C [LFS107](2-2.5T) INC.1-26
-	623A3-80021		SHIFT-ASSY,FORK	ﾌｫｰｸｼﾌﾄｱｯｾﾝ	1	C [LFS122](2-2.5T) INC.1-26
-	623A3-80031		SHIFT-ASSY,FORK	ﾌｫｰｸｼﾌﾄｱｯｾﾝ	1	C [LFS137](2-2.5T) INC.1-26
-	623A3-80041		SHIFT-ASSY,FORK	ﾌｫｰｸｼﾌﾄｱｯｾﾝ	1	C [LFS152](2-2.5T) INC.1-26
-	623A3-80051		SHIFT-ASSY,FORK	ﾌｫｰｸｼﾌﾄｱｯｾﾝ	1	C [LFS167](2-2.5T) INC.1-26
-	623A3-80061		SHIFT-ASSY,FORK	ﾌｫｰｸｼﾌﾄｱｯｾﾝ	1	C [LFS182](2-2.5T) INC.1-26
-	620A3-80101		SHIFT-ASSY,FORK	ﾌｫｰｸｼﾌﾄｱｯｾﾝ	1	A [LFS092/FSW](2T) INC.1-26
-	620A3-80111		SHIFT-ASSY,FORK	ﾌｫｰｸｼﾌﾄｱｯｾﾝ	1	A [LFS107/FSW](2-2.5T) INC.1-26
-	620A3-80121		SHIFT-ASSY,FORK	ﾌｫｰｸｼﾌﾄｱｯｾﾝ	1	A [LFS122/FSW](2-2.5T) INC.1-26
-	620A3-80131		SHIFT-ASSY,FORK	ﾌｫｰｸｼﾌﾄｱｯｾﾝ	1	A [LFS137/FSW](2-2.5T) INC.1-26

FIG.17 FORK SHIFT [FS20A,FS22A,FS23A]

(A502FS10) フォークシフト

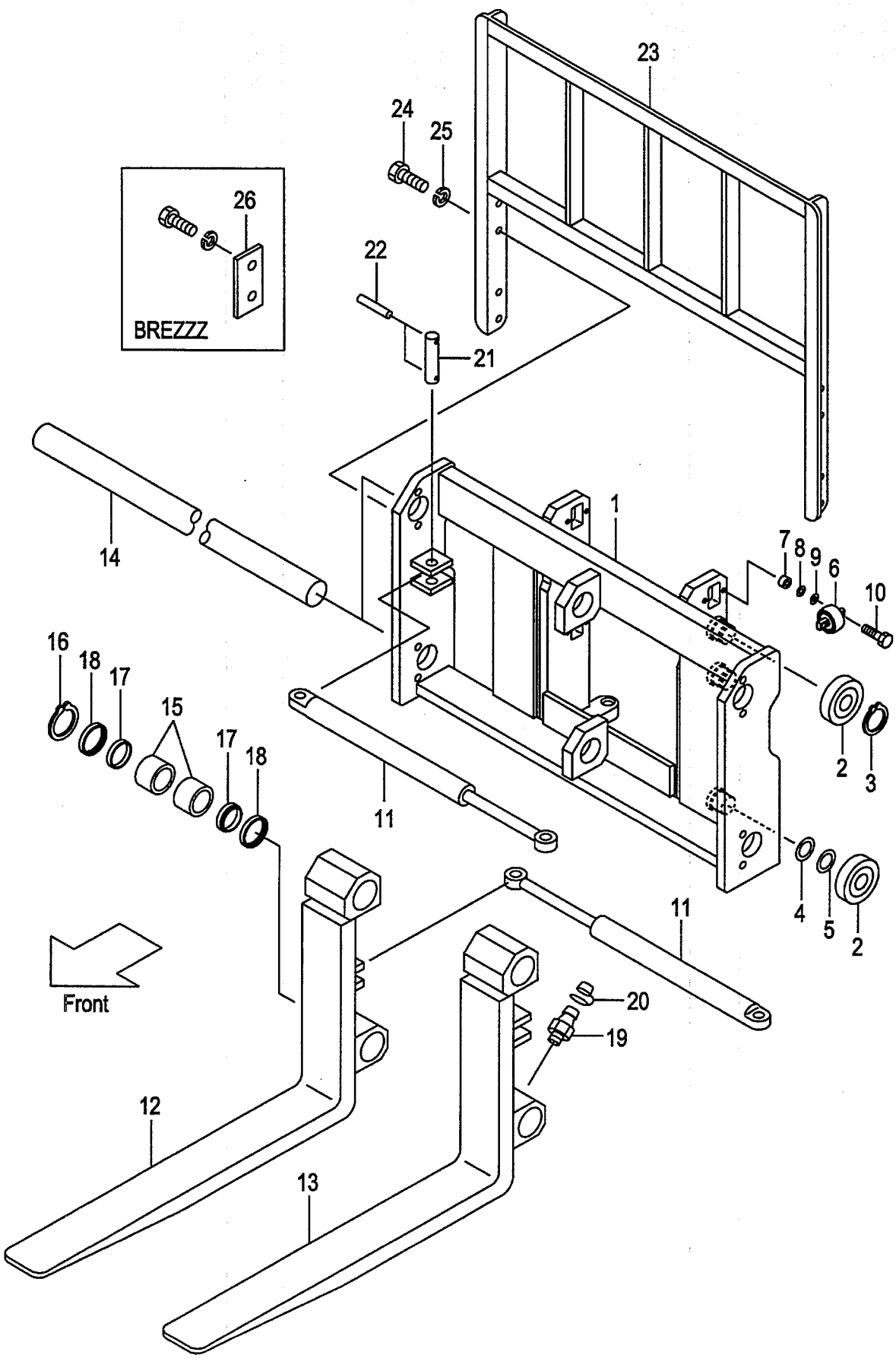

A:FS20A(VM/J)
B:FS22A(VFM/J)
C:FS23A(VFHM/J)

FIG.17
(A502FS10)

Item No	Part No.	Mark	Description		Req'd	Remarks : Serial No.
-	620A3-80141		SHIFT-ASSY,FORK	ﾌｫｰｸｼﾌﾄｱｯｾﾝ	1	A [LFS152/FSW](2-2.5T) INC.1-26
-	620A3-80151		SHIFT-ASSY,FORK	ﾌｫｰｸｼﾌﾄｱｯｾﾝ	1	A [LFS167/FSW](2-2.5T) INC.1-26
-	620A3-80161		SHIFT-ASSY,FORK	ﾌｫｰｸｼﾌﾄｱｯｾﾝ	1	A [LFS182/FSW](2-2.5T) INC.1-26
-	622A3-80101		SHIFT-ASSY,FORK	ﾌｫｰｸｼﾌﾄｱｯｾﾝ	1	B [LFS092/FSW](2T) INC.1-26
-	622A3-80111		SHIFT-ASSY,FORK	ﾌｫｰｸｼﾌﾄｱｯｾﾝ	1	B [LFS107/FSW](2-2.5T) INC.1-26
-	622A3-80121		SHIFT-ASSY,FORK	ﾌｫｰｸｼﾌﾄｱｯｾﾝ	1	B [LFS122/FSW](2-2.5T) INC.1-26
-	622A3-80131		SHIFT-ASSY,FORK	ﾌｫｰｸｼﾌﾄｱｯｾﾝ	1	B [LFS137/FSW](2-2.5T) INC.1-26
-	622A3-80141		SHIFT-ASSY,FORK	ﾌｫｰｸｼﾌﾄｱｯｾﾝ	1	B [LFS152/FSW](2-2.5T) INC.1-26
-	622A3-80151		SHIFT-ASSY,FORK	ﾌｫｰｸｼﾌﾄｱｯｾﾝ	1	B [LFS167/FSW](2-2.5T) INC.1-26
-	622A3-80161		SHIFT-ASSY,FORK	ﾌｫｰｸｼﾌﾄｱｯｾﾝ	1	B [LFS182/FSW](2-2.5T) INC.1-26
-	623A3-80101		SHIFT-ASSY,FORK	ﾌｫｰｸｼﾌﾄｱｯｾﾝ	1	C [LFS092/FSW](2T) INC.1-26
-	623A3-80111		SHIFT-ASSY,FORK	ﾌｫｰｸｼﾌﾄｱｯｾﾝ	1	C [LFS107/FSW](2-2.5T) INC.1-26
-	623A3-80121		SHIFT-ASSY,FORK	ﾌｫｰｸｼﾌﾄｱｯｾﾝ	1	C [LFS122/FSW](2-2.5T) INC.1-26
-	623A3-80131		SHIFT-ASSY,FORK	ﾌｫｰｸｼﾌﾄｱｯｾﾝ	1	C [LFS137/FSW](2-2.5T) INC.1-26
-	623A3-80141		SHIFT-ASSY,FORK	ﾌｫｰｸｼﾌﾄｱｯｾﾝ	1	C [LFS152/FSW](2-2.5T) INC.1-26
-	623A3-80151		SHIFT-ASSY,FORK	ﾌｫｰｸｼﾌﾄｱｯｾﾝ	1	C [LFS167/FSW](2-2.5T) INC.1-26
-	623A3-80161		SHIFT-ASSY,FORK	ﾌｫｰｸｼﾌﾄｱｯｾﾝ	1	C [LFS182/FSW](2-2.5T) INC.1-26
1	620A3-80201		BRACKET,LIFT	ﾌﾞﾗｹｯﾄ	1	A
-	62273-80201		BRACKET,LIFT	ﾌﾞﾗｹｯﾄ	1	B
-	62373-80201		BRACKET,LIFT	ﾌﾞﾗｹｯﾄ	1	C
-	620A3-80211		BRACKET,LIFT	ﾌﾞﾗｹｯﾄ	1	A [FSW]
-	62273-80211		BRACKET,LIFT	ﾌﾞﾗｹｯﾄ	1	B [FSW]
-	62373-80211		BRACKET,LIFT	ﾌﾞﾗｹｯﾄ	1	C [FSW]
2	277P8-22051		ROLLER,END	ﾛｰﾗ	6	A,B
-	277P8-22051		ROLLER,END	ﾛｰﾗ	4	C
-	277P8-22061		ROLLER,END	ﾛｰﾗ	(4)	
3	02100-00045		RING,SNAP	ｽﾅｯﾌﾟﾘﾝｸﾞ	4	A,B
-	02100-00045		RING,SNAP	ｽﾅｯﾌﾟﾘﾝｸﾞ	2	C
4	277P8-22071		SHIM,T-0.5	ｼﾑ	10	
5	277P8-22081		SHIM,T-1.0	ｼﾑ	10	

FIG.17 FORK SHIFT [FS20A,FS22A,FS23A]

(A502FS10) フォークシフト

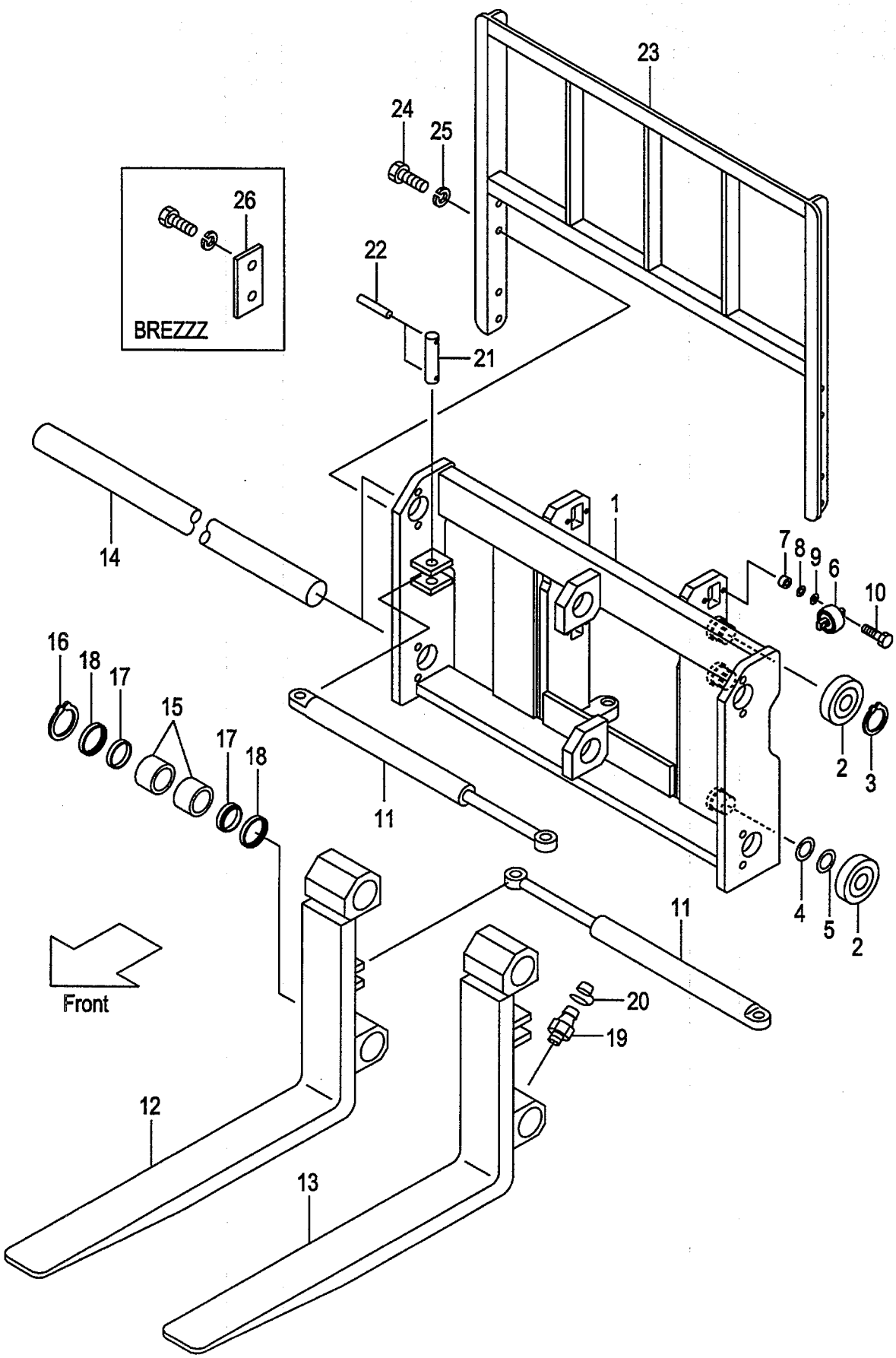

A:FS20A(VM/J)
B:FS22A(VFM/J)
C:FS23A(VFHM/J)

FIG.17
(A502FS10)

Item No	Part No.	Mark	Description		Req'd	Remarks : Serial No.
6	23458-32052		ROLLER,SIDE	ローラ	4	
7	22548-34031		SPACER	スペーサ	8	
8	22548-34051		SHIM,T-0.5	シム	10	
9	22548-34061		SHIM,T-1.0	シム	10	
10	01184-12050		BOLT & WASHER	ボルト&ワッシャ	8	
11	62063-80602		CYL	シリンダ	2	SEE FIG.18
-	62063-80702		CYL	シリンダ	2	[FSW]SEE FIG.18
12	62063-80301		FORK,RH	フォーク	1	[LFS092](2T)
-	62063-80311		FORK,RH	フォーク	1	[LFS107](2-2.5T)
-	62063-80321		FORK,RH	フォーク	1	[LFS122](2-2.5T)
-	62063-80331		FORK,RH	フォーク	1	[LFS137](2-2.5T)
-	62063-80341		FORK,RH	フォーク	1	[LFS152](2-2.5T)
-	62063-80351		FORK,RH	フォーク	1	[LFS167](2-2.5T)
-	62063-80361		FORK,RH	フォーク	1	[LFS182](2-2.5T)
13	62063-80401		FORK,LH	フォーク	1	[LFS092](2T)
-	62063-80411		FORK,LH	フォーク	1	[LFS107](2-2.5T)
-	62063-80421		FORK,LH	フォーク	1	[LFS122](2-2.5T)
-	62063-80431		FORK,LH	フォーク	1	[LFS137](2-2.5T)
-	62063-80441		FORK,LH	フォーク	1	[LFS152](2-2.5T)
-	62063-80451		FORK,LH	フォーク	1	[LFS167](2-2.5T)
-	62063-80461		FORK,LH	フォーク	1	[LFS182](2-2.5T)
14	62063-82502		SHAFT	シャフト	2	
-	62063-82512		SHAFT	シャフト	2	[FSW]
15	62576-12351		BUSHING	ブッシング	8	
16	22678-23751		RING,SNAP	スナップリング	4	
17	62073-82051		SEAL,DUST	シール	8	
18	62073-82061		RETAINER	リテーナ	8	
19	04901-00160		FITTING	フィッティング	4	
20	22199-12401		CAP	キャップ	4	
21	62516-12261		PIN	ピン	4	
22	02270-06040		PIN,SPRING	ピン	8	
23	62063-80501		REST,BACK	バックレスト	1	
-	62063-80511		REST,BACK	バックレスト	1	[FSW]
-	62063-80801		REST,BACK	バックレスト	1	[HBF110](WITHOUT FSW)
-	62063-80811		REST,BACK	バックレスト	1	[HBF120](WITHOUT FSW)
-	62063-80821		REST,BACK	バックレスト	1	[HBF130](WITHOUT FSW)
-	62063-80831		REST,BACK	バックレスト	1	[HBF140](WITHOUT FSW)
-	62063-80841		REST,BACK	バックレスト	1	[HBF150](WITHOUT FSW)
24	01100-14030		BOLT	ボルト	8	
25	02010-00014		WASHER	ワッシャ	8	
26	62263-82051		PLATE	プレート	4	[BREZZZ]
27	02432-01008	+	RIVET	リベット	4	
28	63110-18901	+	PLATE,LOAD CHART	プレート	1	
-	63110-18911	+	PLATE,LOAD CHART	プレート	1	[EXA/ENGLISH]
-	514A3-82301	+	PLATE,LOAD CHART	プレート	1	[EXB/ENGLISH][EXC/ENGLISH]
-	514A3-82301	+	PLATE,LOAD CHART	プレート	1	[EXE/ENGLISH][EXN/ENGLISH]
-	524T3-84031	+	PLATE,LOAD CHART	プレート	1	(RUSSIAN)
-	63110-18921	+	PLATE,LOAD CHART	プレート	1	(CHINESE)
-	514A3-82321	+	PLATE,LOAD CHART	プレート	1	(GERMAN)
-	514A3-82341	+	PLATE,LOAD CHART	プレート	1	(FRENCH)

FIG.17 FORK SHIFT [FS20A,FS22A,FS23A]

(A502FS10) フォークシフト

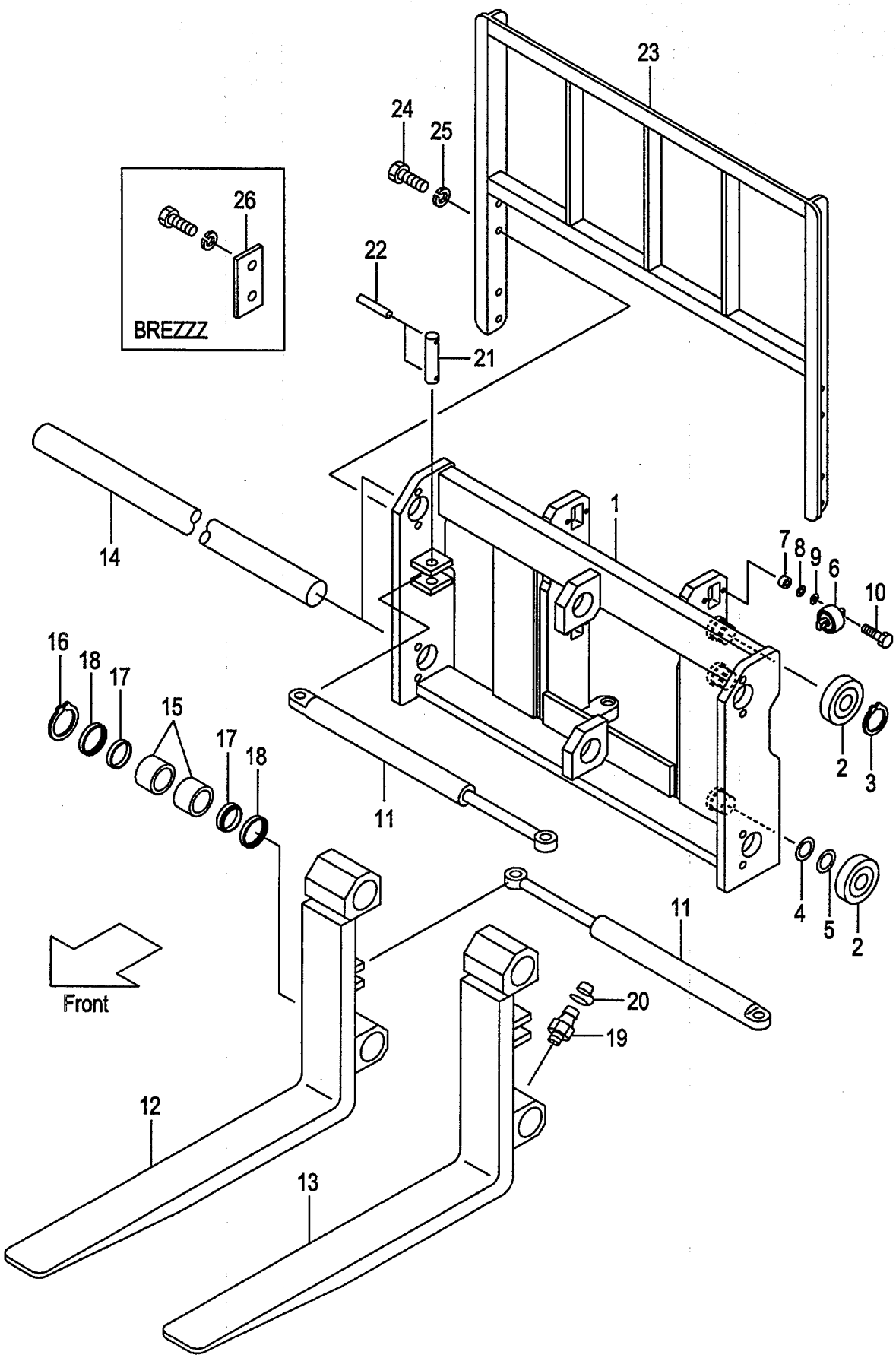

A:FS20A(VM/J)
B:FS22A(VFM/J)
C:FS23A(VFHM/J)

FIG.17
(A502FS10)

Item No	Part No.	Mark	Description		Req'd	Remarks : Serial No.
-	514A3-82331	+	PLATE,LOAD CHART	ﾌﾟﾚｰﾄ	1	(SPANISH)
-	514A3-82361	+	PLATE,LOAD CHART	ﾌﾟﾚｰﾄ	1	(DANISH)
-	514A3-82381	+	PLATE,LOAD CHART	ﾌﾟﾚｰﾄ	1	(GREEK)
-	514A3-82371	+	PLATE,LOAD CHART	ﾌﾟﾚｰﾄ	1	(ITALIAN)
-	514A3-82351	+	PLATE,LOAD CHART	ﾌﾟﾚｰﾄ	1	(DUTCH)
-	514A3-82391	+	PLATE,LOAD CHART	ﾌﾟﾚｰﾄ	1	(PORTUGUESE)
29	09210-10300	+	PLATE,NAME	ﾌﾟﾚｰﾄ	1	
-	09210-10300	+	PLATE,NAME	ﾌﾟﾚｰﾄ	1	(ENGLISH)
-	63110-32111	+	PLATE,NAME	ﾌﾟﾚｰﾄ	1	(RUSSIAN)
-	09201-06201	+	PLATE,NAME	ﾌﾟﾚｰﾄ	1	(CHINESE)
-	63110-19211	+	PLATE,NAME	ﾌﾟﾚｰﾄ	1	(GERMAN)
-	63110-19251	+	PLATE,NAME	ﾌﾟﾚｰﾄ	1	(FRENCH)
-	63110-19231	+	PLATE,NAME	ﾌﾟﾚｰﾄ	1	(SPANISH)
-	63110-19291	+	PLATE,NAME	ﾌﾟﾚｰﾄ	1	(DANISH)
-	63110-19331	+	PLATE,NAME	ﾌﾟﾚｰﾄ	1	(GREEK)
-	63110-19311	+	PLATE,NAME	ﾌﾟﾚｰﾄ	1	(ITALIAN)
-	63110-19271	+	PLATE,NAME	ﾌﾟﾚｰﾄ	1	(DUTCH)
-	63110-19351	+	PLATE,NAME	ﾌﾟﾚｰﾄ	1	(PORTUGUESE)
30	214A7-42181	+	KNOB,DARK-GRAY	ﾉﾌﾞ	2	
31	63110-19941	+	DECAL,FS,RH	ﾃﾞｶﾙ	1	
32	63110-19951	+	DECAL,FS,LH	ﾃﾞｶﾙ	1	
33	62063-87001	+	DECAL,CAUTION	ﾃﾞｶﾙ	1	
34	27419-12072	+	DECAL,CAUTION	ﾃﾞｶﾙ	2	

FIG.18 CYLINDER [FS20A,FS22A,FS23A]

(A502FS20) ｼﾘﾝﾀﾞ

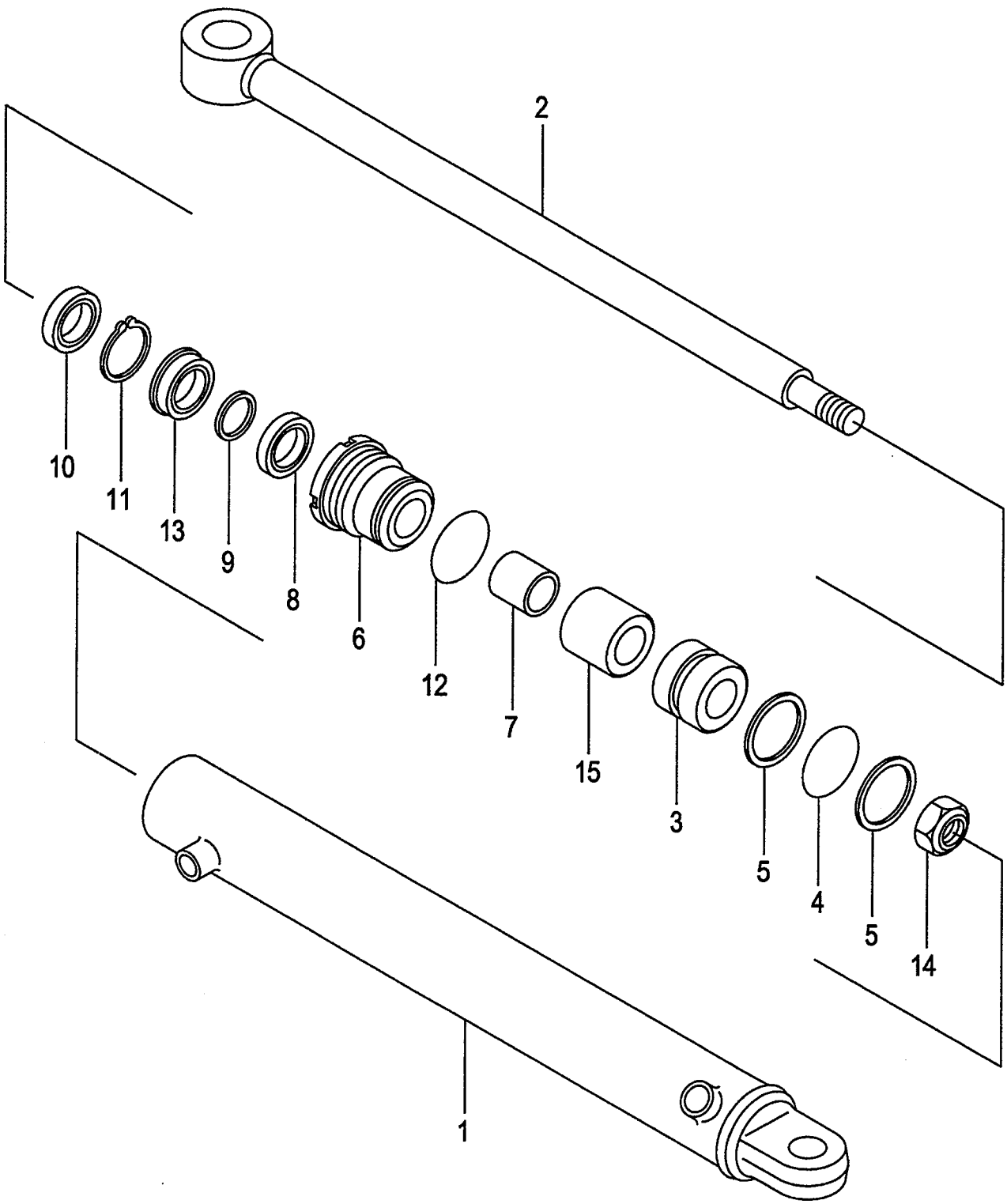

A:FS20A(VM/J)
B:FS22A(VFM/J)
C:FS23A(VFHM/J)

FIG.18
(A502FS20)

Item No	Part No.	Mark	Description		Req'd	Remarks : Serial No.
A1	62063-80602		CYL-ASSY	ｼﾘﾝﾀﾞｱｯｾﾝ	2	INC.1-15
-	62063-80702		CYL-ASSY	ｼﾘﾝﾀﾞｱｯｾﾝ	2	[FSW] INC.1-14
1	62063-80612		TUBE	ﾁｭｰﾌﾞ	2	
-	62063-80712		TUBE	ﾁｭｰﾌﾞ	2	[FSW]
2	62063-80621		ROD,PISTON	ﾛｯﾄﾞ	2	
-	62063-80721		ROD,PISTON	ﾛｯﾄﾞ	2	[FSW]
3	62063-82651		PISTON	ﾋﾟｽﾄﾝ	2	
4	03300-00390	*	O-RING	Oﾘﾝｸﾞ	2	
5	27738-52091	*	RING,BACK-UP	ﾘﾝｸﾞ	4	
6	256A8-42091		CAP	ｷｬｯﾌﾟ	2	
7	22553-12031		BUSH	ﾌﾞｯｼﾝｸﾞ	2	
8	29568-52081	*	PACKING	ﾊﾟｯｷﾝｸﾞ	2	
9	29568-52041	*	RING,BACK-UP	ﾘﾝｸﾞ	2	
10	29568-52091	*	SEAL	ｼｰﾙ	2	
11	02110-00042	*	RING,SNAP	ｽﾅｯﾌﾟﾘﾝｸﾞ	2	
12	03350-00400	*	O-RING	Oﾘﾝｸﾞ	2	
13	29568-52051		RETAINER	ﾘﾃｰﾅ	2	
14	256C8-42081		NUT	ﾅｯﾄ	2	
15	62063-82661		SPACER	ｽﾍﾟｰｻ	2	(WITHOUT FSW)
K1	273A8-99802		KIT,REPAIR	ﾘﾍﾟｱｷｯﾄ	2	INC.4,5,8-12

FIG.19 HYDRAULIC LINE (CONNECTOR-CYLINDER)

(A502FS30) ﾊｲﾄﾞﾛﾘｯｸﾗｲﾝ (ｺﾈｸﾀｰｼﾘﾝﾀﾞｰ)

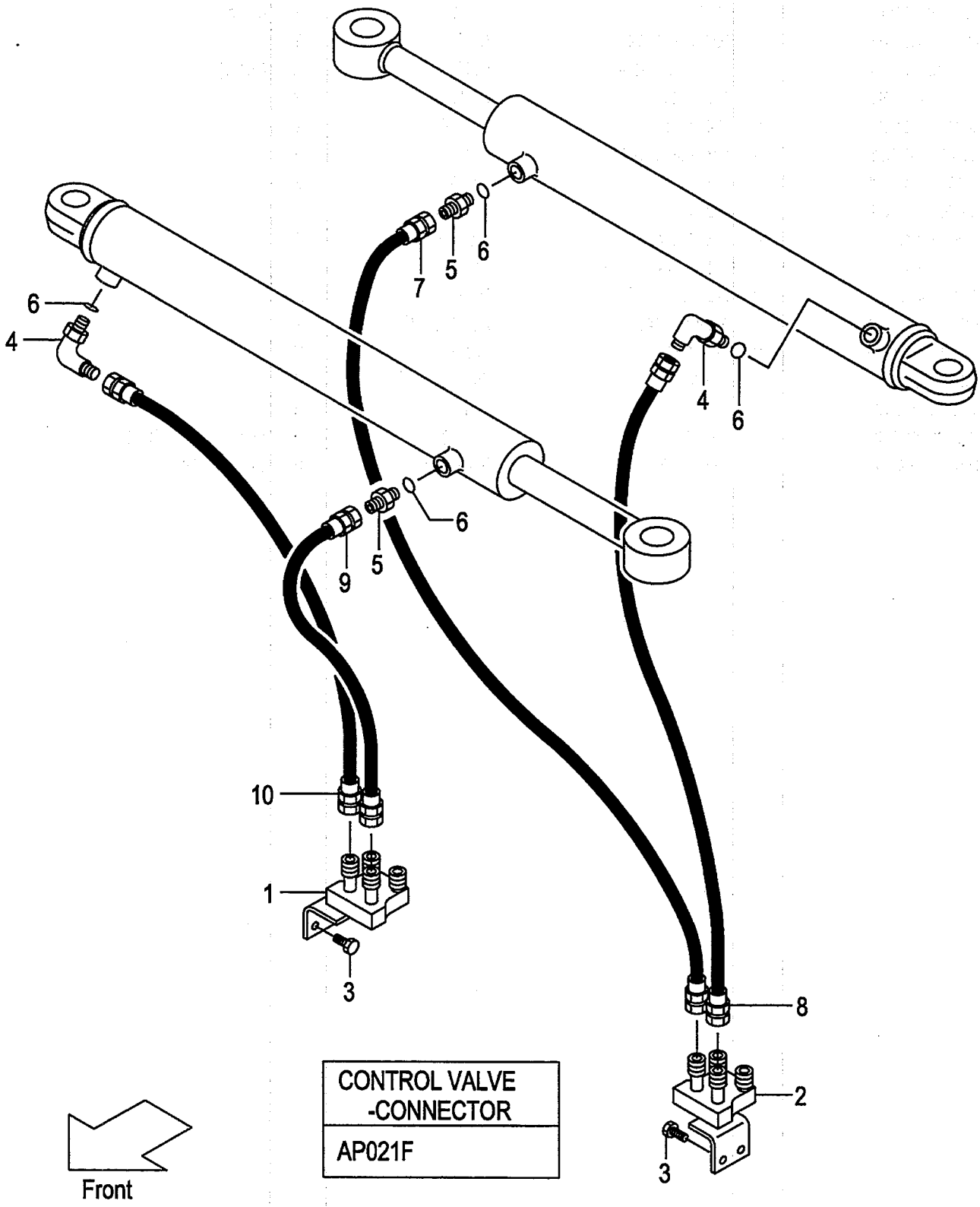

FIG.19
(A502FS30)

A:FS20A(VM/J)

Item No	Part No.	Mark	Description		Req'd	Remarks : Serial No.
1	621F0-12061		STUD	ｽﾀｯﾄﾞ	1	
2	621F0-12071		STUD	ｽﾀｯﾄﾞ	1	
3	01184-10025		BOLT & WASHER	ﾎﾞﾙﾄ&ﾜｯｼｬ	4	
4	04150-00202		ELBOW	ｴﾙﾎﾞ	2	
5	04134-00202		NIPPLE	ﾆｯﾌﾟﾙ	2	
6	03320-00110		O-RING	Oﾘﾝｸﾞ	4	
7	63130-31045		HOSE	ﾎｰｽ	1	
8	63130-31050		HOSE	ﾎｰｽ	1	
-	63130-31065		HOSE	ﾎｰｽ	1	[FSW]
9	63130-31055		HOSE	ﾎｰｽ	1	
10	63130-31060		HOSE	ﾎｰｽ	1	
-	63130-31065		HOSE	ﾎｰｽ	1	[FSW]

FIG.20 HYDRAULIC LINE (CONNECTOR-CYLINDER)[VM/SSV]

(A502FS40) ﾊｲﾄﾞﾛﾘｯｸﾗｲﾝ (ｺﾈｸﾀｰｼﾘﾝﾀﾞ)

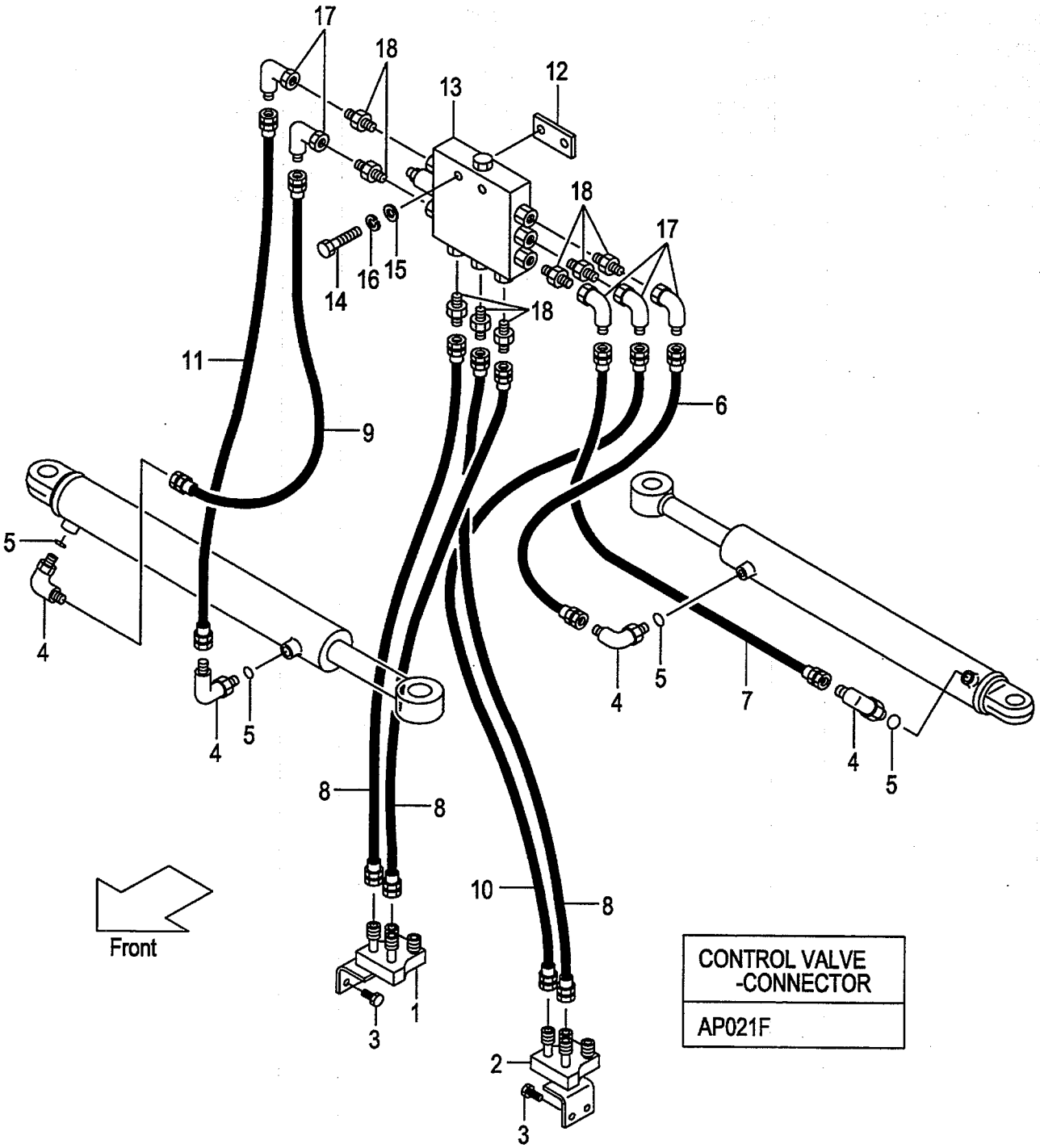

FIG.20
(A502FS40)

A:FS20A(VM/J)

Item No	Part No.	Mark	Description		Req'd	Remarks : Serial No.
1	621F0-12061		STUD	ｽﾀｯﾄﾞ	1	[SSV]
2	621F0-12071		STUD	ｽﾀｯﾄﾞ	1	[SSV]
3	01184-10025		BOLT & WASHER	ﾎﾞﾙﾄ&ﾜｯｼｬ	4	[SSV]
4	63110-12351		ELBOW	ｴﾙﾎﾞ	4	[SSV]
5	03320-00110		O-RING	Oﾘﾝｸﾞ	4	[SSV]
6	63130-31035		HOSE	ﾎｰｽ	1	[SSV]
7	63130-31035		HOSE	ﾎｰｽ	1	[SSV]
-	63130-31050		HOSE	ﾎｰｽ	1	[SSV][FSW]
8	63130-31040		HOSE	ﾎｰｽ	3	[SSV]
9	63130-31045		HOSE	ﾎｰｽ	1	[SSV]
-	63130-31060		HOSE	ﾎｰｽ	1	[SSV][FSW]
10	63130-31042		HOSE	ﾎｰｽ	1	[SSV]
11	63130-31040		HOSE	ﾎｰｽ	1	[SSV]
12	62246-24201		PLATE	ﾌﾟﾚｰﾄ	1	[SSV]
13	63130-12651		VALVE,SIDE-SHIFT	ﾊﾞﾙﾌﾞ	1	[SSV]
14	01100-08045		BOLT	ﾎﾞﾙﾄ	2	[SSV]
15	02000-00008		WASHER	ﾜｯｼｬ	2	[SSV]
16	02010-00008		WASHER	ﾜｯｼｬ	2	[SSV]
17	62150-14301		ELBOW	ｴﾙﾎﾞ	5	[SSV]
18	53110-12491		NIPPLE	ﾆｯﾌﾟﾙ	8	[SSV]

FIG.21 HYDRAULIC LINE (CONNECTOR-CYLINDER)[VFM]

(A502FS50) ﾊｲﾄﾞﾛﾘｯｸﾗｲﾝ (ｺﾈｸﾀｰｼﾘﾝﾀﾞｰ)

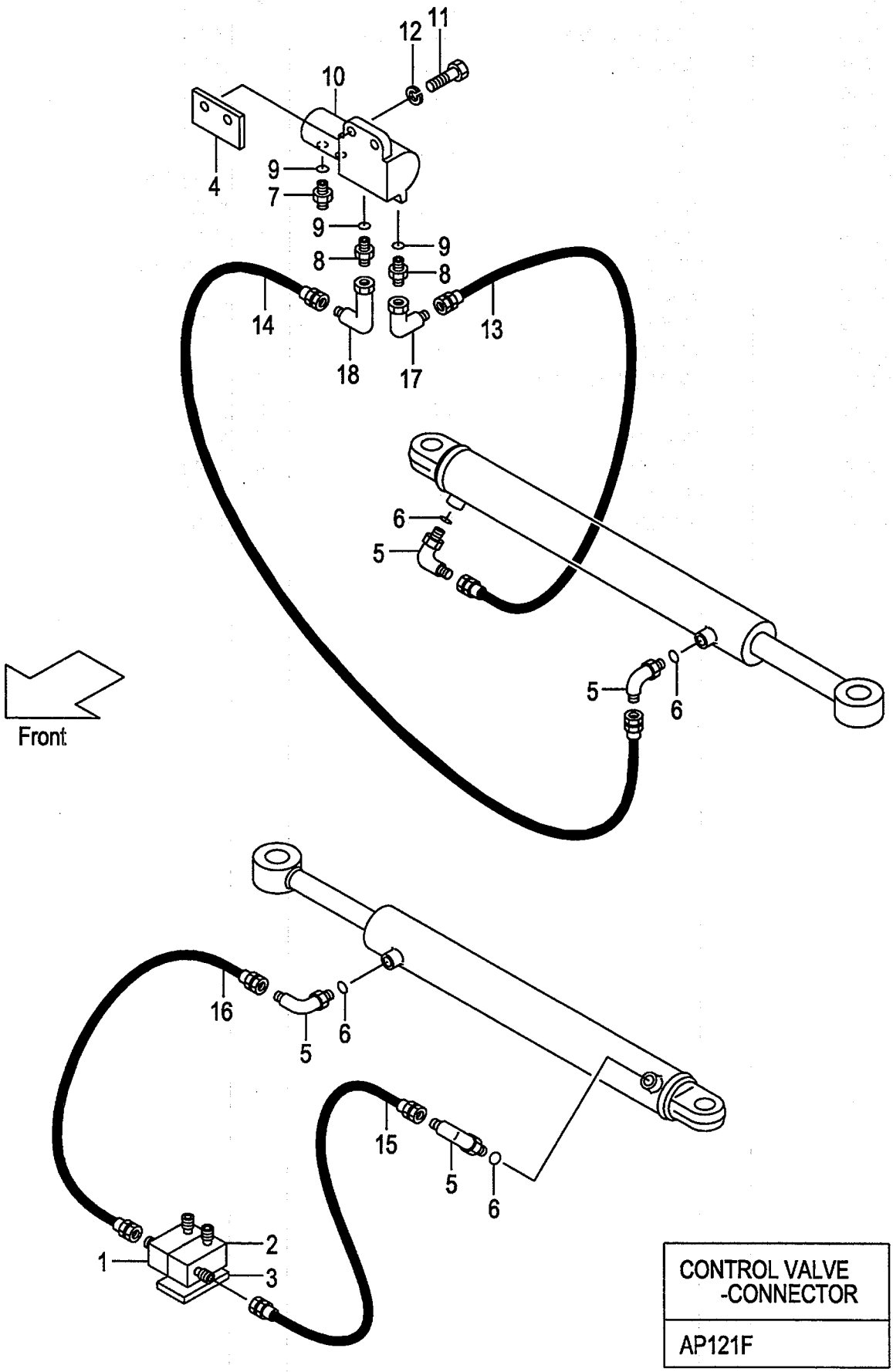

CONTROL VALVE -CONNECTOR
AP121F

A:FS22A(VFM/J)

Item No	Part No.	Mark	Description		Req'd	Remarks : Serial No.
1	63110-14751		STUD	ｽﾀｯﾄﾞ	1	
2	63110-14731		STUD	ｽﾀｯﾄﾞ	1	
3	62386-12211		PLATE	ﾌﾟﾚｰﾄ	1	
4	62150-12791		BRACKET	ﾌﾞﾗｹｯﾄ	1	
5	63110-12351		ELBOW	ｴﾙﾎﾞ	4	
6	03320-00110		O-RING	Oﾘﾝｸﾞ	4	
7	63110-12281		NIPPLE	ﾆｯﾌﾟﾙ	2	
8	04134-00303		NIPPLE	ﾆｯﾌﾟﾙ	2	
9	03320-00140		O-RING	Oﾘﾝｸﾞ	4	
10	63130-15103		BLOCK,JUNCTION	ﾌﾞﾛｯｸ	1	SEE FIG.23
11	01100-12020		BOLT	ﾎﾞﾙﾄ	2	
12	02010-00012		WASHER	ﾜｯｼｬ	2	
13	63130-21050		HOSE	ﾎｰｽ	1	
-	63130-21060		HOSE	ﾎｰｽ	1	[FSW]
14	63130-21045		HOSE	ﾎｰｽ	1	
15	63130-21040		HOSE	ﾎｰｽ	1	
-	63130-21065		HOSE	ﾎｰｽ	1	[FSW]
16	63130-21030		HOSE	ﾎｰｽ	1	
-	63130-21040		HOSE	ﾎｰｽ	1	[FSW]
17	04150-10303		ELBOW	ｴﾙﾎﾞ	1	
18	04150-00303		ELBOW	ｴﾙﾎﾞ	1	

FIG.22 HYDRAULIC LINE (CONNECTOR-CYLINDER)[VFHM]

(A502FS60) ﾊｲﾄﾞﾛﾘｯｸﾗｲﾝ (ｺﾈｸﾀｰｼﾘﾝﾀﾞｰ)

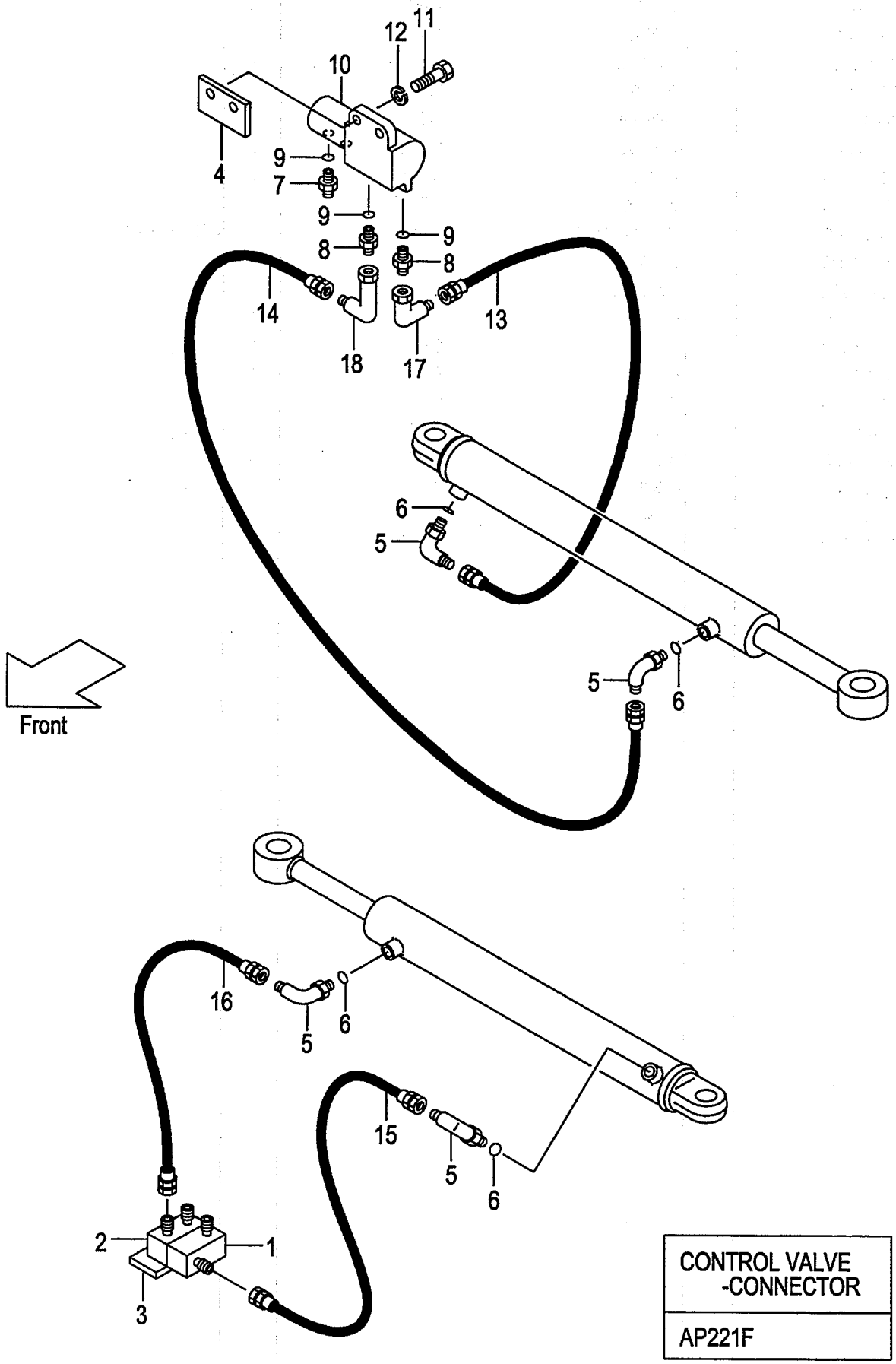

A:FS23A(VFHM/J)

Item No	Part No.	Mark	Description		Req'd	Remarks : Serial No.
1	63110-14731		STUD	ｽﾀｯﾄﾞ	1	
2	62150-12841		STUD	ｽﾀｯﾄﾞ	1	
3	62386-12211		PLATE	ﾌﾟﾚｰﾄ	1	
4	62150-12791		BRACKET	ﾌﾞﾗｹｯﾄ	1	
5	63110-12351		ELBOW	ｴﾙﾎﾞ	4	
6	03320-00110		O-RING	Oﾘﾝｸﾞ	4	
7	63110-12281		NIPPLE	ﾆｯﾌﾟﾙ	2	
8	04134-00303		NIPPLE	ﾆｯﾌﾟﾙ	2	
9	03320-00140		O-RING	Oﾘﾝｸﾞ	4	
10	63130-15103		BLOCK,JUNCTION	ﾌﾞﾛｯｸ	1	SEE FIG.23
11	01100-12020		BOLT	ﾎﾞﾙﾄ	2	
12	02010-00012		WASHER	ﾜｯｼｬ	2	
13	63130-21050		HOSE	ﾎｰｽ	1	
-	63130-21060		HOSE	ﾎｰｽ	1	[FSW]
14	63130-21045		HOSE	ﾎｰｽ	1	
15	63130-21040		HOSE	ﾎｰｽ	1	
-	63130-21065		HOSE	ﾎｰｽ	1	[FSW]
16	63130-21030		HOSE	ﾎｰｽ	1	
-	63130-21040		HOSE	ﾎｰｽ	1	[FSW]
17	04150-10303		ELBOW	ｴﾙﾎﾞ	1	
18	04150-00303		ELBOW	ｴﾙﾎﾞ	1	

FIG.23 JUNCTION BLOCK [FS22A,FS23A]

(A502FS70) ｼﾞｬﾝｸｼｮﾝﾌﾞﾛｯｸ

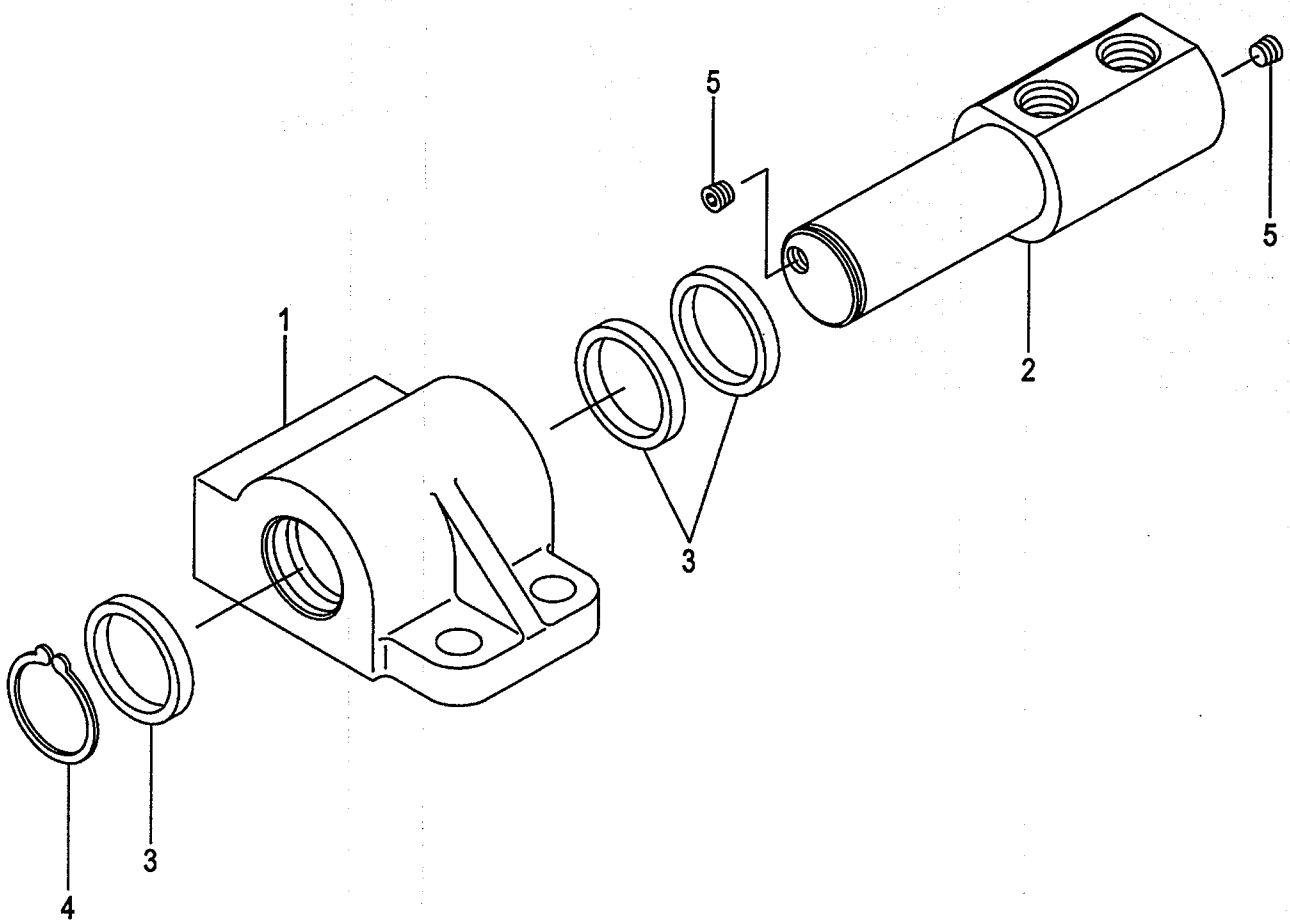

A:FS22A(VFM/J)
B:FS23A(VFHM/J)

FIG.23
(A502FS70)

Item No	Part No.	Mark	Description		Req'd	Remarks : Serial No.
A1	63130-15103		BLOCK-ASSY,JUNCTION	ｼﾞｬﾝｸｼｮﾝﾌﾞﾛｯｸｱｯｾﾝ	1	INC.1-5
1	63110-11521		HOUSING	ﾊｳｼﾞﾝｸﾞ	1	
2	63110-11531		SHAFT	ｼｬﾌﾄ	1	
3	63110-16301		SEAL	ｼｰﾙ	3	
4	02100-00030		RING,SNAP	ｽﾅｯﾌﾟﾘﾝｸﾞ	1	
5	63110-14511		PLUG	ﾌﾟﾗｸﾞ	2	

FIG.24 FORK SHIFT [FS28A,FS29A,FS31A]

(A503FS10) フォークシフト

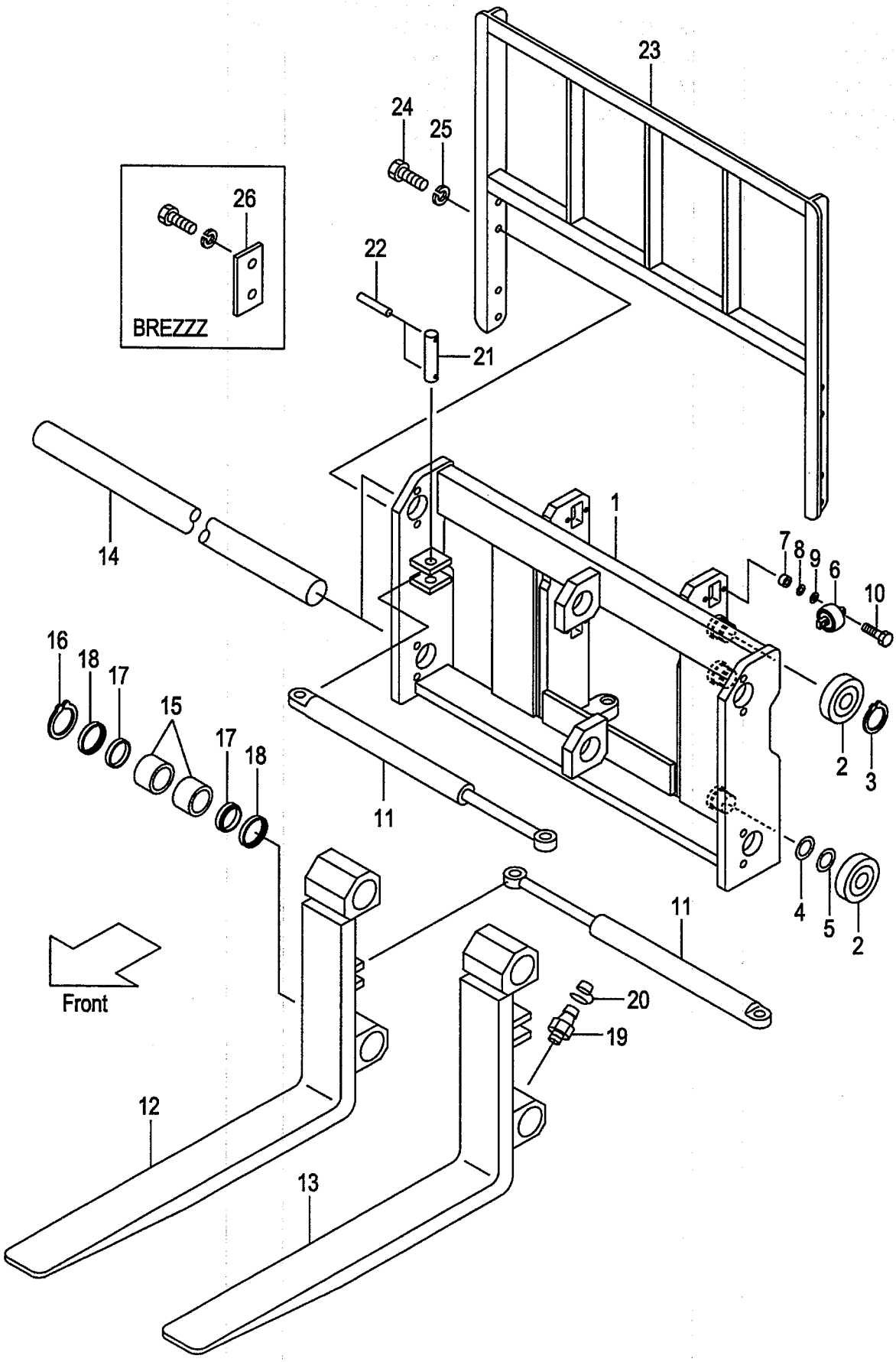

A:FS31A(VM/J)
B:FS28A(VFM/J)
C:FS29A(VFHM/J)

FIG.24
(A503FS10)

Item No	Part No.	Mark	Description		Req'd	Remarks : Serial No.
A1	631A3-80001		SHIFT-ASSY,FORK	ﾌｫｰｸｼﾌﾄｱｯｾﾝ	1	A [LFS107] INC.1-26
-	631A3-80011		SHIFT-ASSY,FORK	ﾌｫｰｸｼﾌﾄｱｯｾﾝ	1	A [LFS122] INC.1-26
-	631A3-80021		SHIFT-ASSY,FORK	ﾌｫｰｸｼﾌﾄｱｯｾﾝ	1	A [LFS137] INC.1-26
-	631A3-80031		SHIFT-ASSY,FORK	ﾌｫｰｸｼﾌﾄｱｯｾﾝ	1	A [LFS152] INC.1-26
-	631A3-80041		SHIFT-ASSY,FORK	ﾌｫｰｸｼﾌﾄｱｯｾﾝ	1	A [LFS167] INC.1-26
-	631A3-80051		SHIFT-ASSY,FORK	ﾌｫｰｸｼﾌﾄｱｯｾﾝ	1	A [LFS182] INC.1-26
-	631A3-80061		SHIFT-ASSY,FORK	ﾌｫｰｸｼﾌﾄｱｯｾﾝ	1	A [LFS197] INC.1-26
-	631A3-80071		SHIFT-ASSY,FORK	ﾌｫｰｸｼﾌﾄｱｯｾﾝ	1	A [LFS212] INC.1-26
-	628A3-80001		SHIFT-ASSY,FORK	ﾌｫｰｸｼﾌﾄｱｯｾﾝ	1	B [LFS107] INC.1-26
-	628A3-80011		SHIFT-ASSY,FORK	ﾌｫｰｸｼﾌﾄｱｯｾﾝ	1	B [LFS122] INC.1-26
-	628A3-80021		SHIFT-ASSY,FORK	ﾌｫｰｸｼﾌﾄｱｯｾﾝ	1	B [LFS137] INC.1-26
-	628A3-80031		SHIFT-ASSY,FORK	ﾌｫｰｸｼﾌﾄｱｯｾﾝ	1	B [LFS152] INC.1-26
-	628A3-80041		SHIFT-ASSY,FORK	ﾌｫｰｸｼﾌﾄｱｯｾﾝ	1	B [LFS167] INC.1-26
-	628A3-80051		SHIFT-ASSY,FORK	ﾌｫｰｸｼﾌﾄｱｯｾﾝ	1	B [LFS182] INC.1-26
-	628A3-80061		SHIFT-ASSY,FORK	ﾌｫｰｸｼﾌﾄｱｯｾﾝ	1	B [LFS197] INC.1-26
-	628A3-80071		SHIFT-ASSY,FORK	ﾌｫｰｸｼﾌﾄｱｯｾﾝ	1	B [LFS212] INC.1-26
-	629A3-80001		SHIFT-ASSY,FORK	ﾌｫｰｸｼﾌﾄｱｯｾﾝ	1	C [LFS107] INC.1-26
-	629A3-80011		SHIFT-ASSY,FORK	ﾌｫｰｸｼﾌﾄｱｯｾﾝ	1	C [LFS122] INC.1-26
-	629A3-80021		SHIFT-ASSY,FORK	ﾌｫｰｸｼﾌﾄｱｯｾﾝ	1	C [LFS137] INC.1-26
-	629A3-80031		SHIFT-ASSY,FORK	ﾌｫｰｸｼﾌﾄｱｯｾﾝ	1	C [LFS152] INC.1-26
-	629A3-80041		SHIFT-ASSY,FORK	ﾌｫｰｸｼﾌﾄｱｯｾﾝ	1	C [LFS167] INC.1-26
-	629A3-80051		SHIFT-ASSY,FORK	ﾌｫｰｸｼﾌﾄｱｯｾﾝ	1	C [LFS182] INC.1-26
-	629A3-80061		SHIFT-ASSY,FORK	ﾌｫｰｸｼﾌﾄｱｯｾﾝ	1	C [LFS197] INC.1-26
-	629A3-80071		SHIFT-ASSY,FORK	ﾌｫｰｸｼﾌﾄｱｯｾﾝ	1	C [LFS212] INC.1-26
-	631A3-80101		SHIFT-ASSY,FORK	ﾌｫｰｸｼﾌﾄｱｯｾﾝ	1	A [LFS107/FSW] INC.1-26

FIG.24 FORK SHIFT [FS28A,FS29A,FS31A]

(A503FS10) フォークシフト

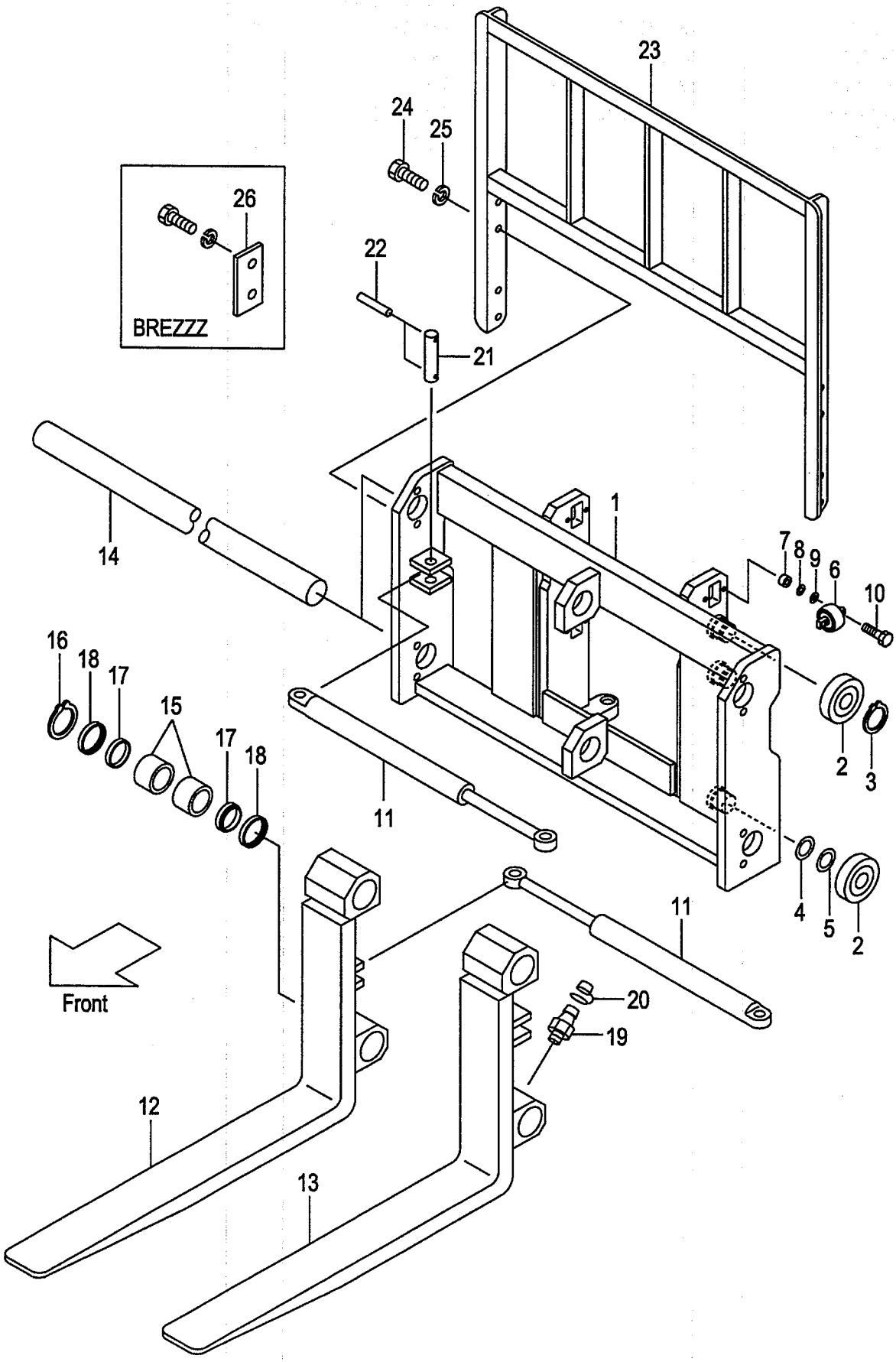

A:FS31A(VM/J)
B:FS28A(VFM/J)
C:FS29A(VFHM/J)

FIG.24
(A503FS10)

Item No	Part No.	Mark	Description		Req'd	Remarks : Serial No.
-	631A3-80111		SHIFT-ASSY,FORK	ﾌｫｰｸｼﾌﾄｱｯｾﾝ	1	A [LFS122/FSW] INC.1-26
-	631A3-80121		SHIFT-ASSY,FORK	ﾌｫｰｸｼﾌﾄｱｯｾﾝ	1	A [LFS137/FSW] INC.1-26
-	631A3-80131		SHIFT-ASSY,FORK	ﾌｫｰｸｼﾌﾄｱｯｾﾝ	1	A [LFS152/FSW] INC.1-26
-	631A3-80141		SHIFT-ASSY,FORK	ﾌｫｰｸｼﾌﾄｱｯｾﾝ	1	A [LFS167/FSW] INC.1-26
-	631A3-80151		SHIFT-ASSY,FORK	ﾌｫｰｸｼﾌﾄｱｯｾﾝ	1	A [LFS182/FSW] INC.1-26
-	631A3-80161		SHIFT-ASSY,FORK	ﾌｫｰｸｼﾌﾄｱｯｾﾝ	1	A [LFS197/FSW] INC.1-26
-	631A3-80171		SHIFT-ASSY,FORK	ﾌｫｰｸｼﾌﾄｱｯｾﾝ	1	A [LFS212/FSW] INC.1-26
-	628A3-80101		SHIFT-ASSY,FORK	ﾌｫｰｸｼﾌﾄｱｯｾﾝ	1	B [LFS107/FSW] INC.1-26
-	628A3-80111		SHIFT-ASSY,FORK	ﾌｫｰｸｼﾌﾄｱｯｾﾝ	1	B [LFS122/FSW] INC.1-26
-	628A3-80121		SHIFT-ASSY,FORK	ﾌｫｰｸｼﾌﾄｱｯｾﾝ	1	B [LFS137/FSW] INC.1-26
-	628A3-80131		SHIFT-ASSY,FORK	ﾌｫｰｸｼﾌﾄｱｯｾﾝ	1	B [LFS152/FSW] INC.1-26
-	628A3-80141		SHIFT-ASSY,FORK	ﾌｫｰｸｼﾌﾄｱｯｾﾝ	1	B [LFS167/FSW] INC.1-26
-	628A3-80151		SHIFT-ASSY,FORK	ﾌｫｰｸｼﾌﾄｱｯｾﾝ	1	B [LFS182/FSW] INC.1-26
-	628A3-80161		SHIFT-ASSY,FORK	ﾌｫｰｸｼﾌﾄｱｯｾﾝ	1	B [LFS197/FSW] INC.1-26
-	628A3-80171		SHIFT-ASSY,FORK	ﾌｫｰｸｼﾌﾄｱｯｾﾝ	1	B [LFS212/FSW] INC.1-26
-	629A3-80101		SHIFT-ASSY,FORK	ﾌｫｰｸｼﾌﾄｱｯｾﾝ	1	C [LFS107/FSW] INC.1-26
-	629A3-80111		SHIFT-ASSY,FORK	ﾌｫｰｸｼﾌﾄｱｯｾﾝ	1	C [LFS122/FSW] INC.1-26
-	629A3-80121		SHIFT-ASSY,FORK	ﾌｫｰｸｼﾌﾄｱｯｾﾝ	1	C [LFS137/FSW] INC.1-26
-	629A3-80131		SHIFT-ASSY,FORK	ﾌｫｰｸｼﾌﾄｱｯｾﾝ	1	C [LFS152/FSW] INC.1-26
-	629A3-80141		SHIFT-ASSY,FORK	ﾌｫｰｸｼﾌﾄｱｯｾﾝ	1	C [LFS167/FSW] INC.1-26
-	629A3-80151		SHIFT-ASSY,FORK	ﾌｫｰｸｼﾌﾄｱｯｾﾝ	1	C [LFS182/FSW] INC.1-26
-	629A3-80161		SHIFT-ASSY,FORK	ﾌｫｰｸｼﾌﾄｱｯｾﾝ	1	C [LFS197/FSW] INC.1-26
-	629A3-80171		SHIFT-ASSY,FORK	ﾌｫｰｸｼﾌﾄｱｯｾﾝ	1	C [LFS212/FSW] INC.1-26
1	631A3-80201		BRACKET,LIFT	ﾌﾞﾗｹｯﾄ	1	A
-	62873-81001		BRACKET,LIFT	ﾌﾞﾗｹｯﾄ	1	B
-	62973-81001		BRACKET,LIFT	ﾌﾞﾗｹｯﾄ	1	C

FIG.24 FORK SHIFT [FS28A,FS29A,FS31A]

(A503FS10) フォークシフト

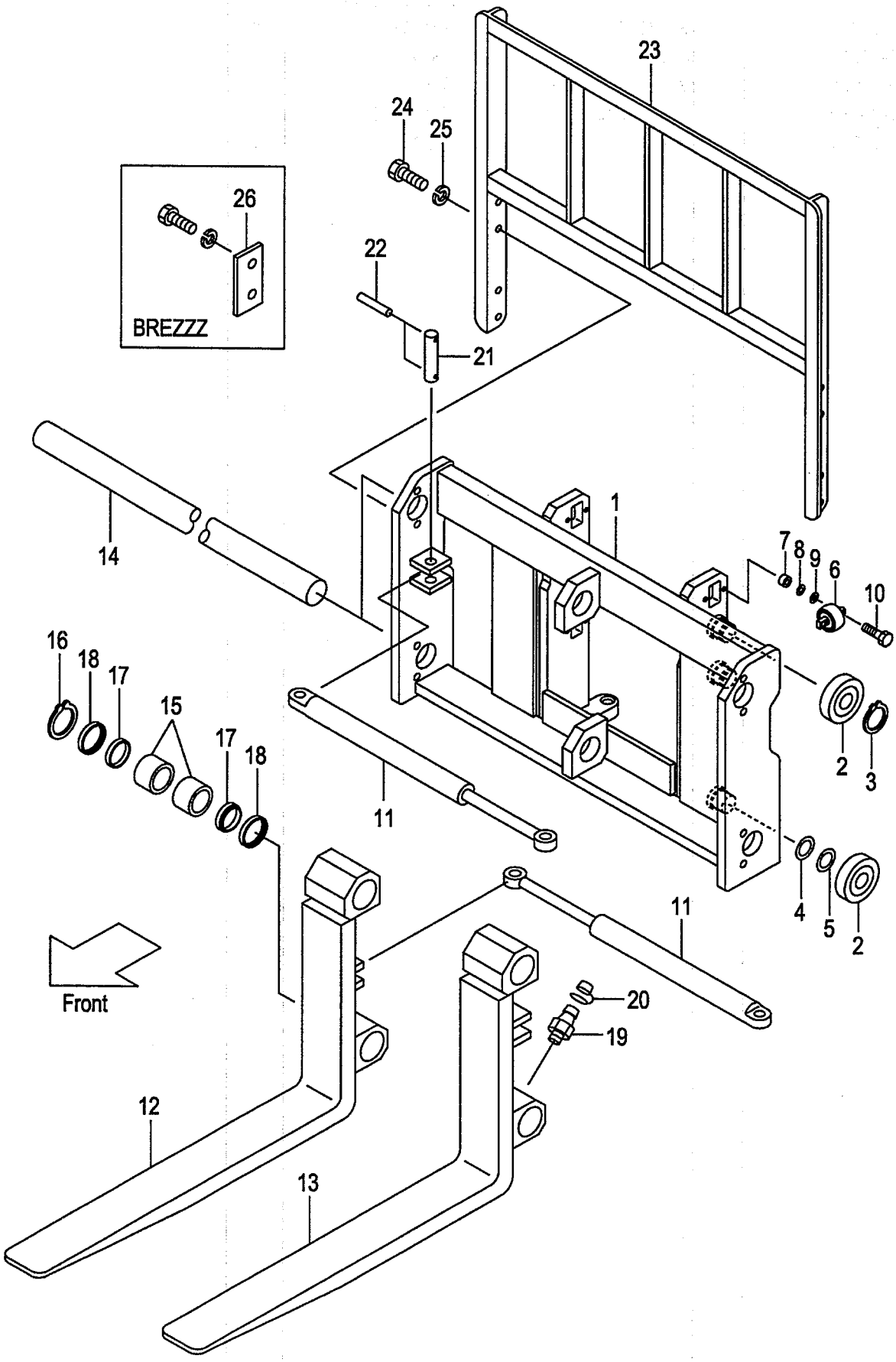

A:FS31A(VM/J)
B:FS28A(VFM/J)
C:FS29A(VFHM/J)

FIG.24
(A503FS10)

Item No	Part No.	Mark	Description		Req'd	Remarks : Serial No.
-	631A3-80211		BRACKET,LIFT	ﾌﾞﾗｹｯﾄ	1	A [FSW]
-	62873-81011		BRACKET,LIFT	ﾌﾞﾗｹｯﾄ	1	B [FSW]
-	62973-81011		BRACKET,LIFT	ﾌﾞﾗｹｯﾄ	1	C [FSW]
2	277P8-22051		ROLLER,END	ﾛｰﾗ	6	A,B
-	277P8-22051		ROLLER,END	ﾛｰﾗ	4	C
-	277P8-22061		ROLLER,END	ﾛｰﾗ	(4)	
3	02100-00045		RING,SNAP	ｽﾅｯﾌﾟﾘﾝｸﾞ	4	
-	02100-00045		RING,SNAP	ｽﾅｯﾌﾟﾘﾝｸﾞ	2	
4	277P8-22071		SHIM,T-0.5	ｼﾑ	10	
5	277P8-22081		SHIM,T-1.0	ｼﾑ	10	
6	23458-32052		ROLLER,SIDE	ﾛｰﾗ	4	
7	22548-34031		SPACER	ｽﾍﾟｰｻ	8	
8	22548-34051		SHIM,T-0.5	ｼﾑ	10	
9	22548-34061		SHIM,T-1.0	ｼﾑ	10	
10	01184-12050		BOLT & WASHER	ﾎﾞﾙﾄ&ﾜｯｼｬ	8	
11	63163-80602		CYL	ｼﾘﾝﾀﾞ	2	SEE FIG.25
-	62063-80702		CYL	ｼﾘﾝﾀﾞ	2	[FSW]SEE FIG.25
12	83173-80301		FORK,RH	ﾌｫｰｸ	1	[LFS107]
-	63173-80311		FORK,RH	ﾌｫｰｸ	1	[LFS122]
-	63173-80321		FORK,RH	ﾌｫｰｸ	1	[LFS137]
-	63173-80331		FORK,RH	ﾌｫｰｸ	1	[LFS152]
-	63173-80341		FORK,RH	ﾌｫｰｸ	1	[LFS167]
-	63173-80351		FORK,RH	ﾌｫｰｸ	1	[LFS182]
-	63173-80361		FORK,RH	ﾌｫｰｸ	1	[LFS197]
-	63173-80371		FORK,RH	ﾌｫｰｸ	1	[LFS212]
13	83173-80401		FORK,LH	ﾌｫｰｸ	1	[LFS107]
-	63173-80411		FORK,LH	ﾌｫｰｸ	1	[LFS122]
-	63173-80421		FORK,LH	ﾌｫｰｸ	1	[LFS137]
-	63173-80431		FORK,LH	ﾌｫｰｸ	1	[LFS152]
-	63173-80441		FORK,LH	ﾌｫｰｸ	1	[LFS167]
-	63173-80451		FORK,LH	ﾌｫｰｸ	1	[LFS182]
-	63173-80461		FORK,LH	ﾌｫｰｸ	1	[LFS197]
-	63173-80471		FORK,LH	ﾌｫｰｸ	1	[LFS212]
14	63163-82502		SHAFT	ｼｬﾌﾄ	2	
-	63163-82512		SHAFT	ｼｬﾌﾄ	2	[WFS]
15	62576-12351		BUSHING	ﾌﾞｯｼﾝｸﾞ	8	
16	22678-23751		RING,SNAP	ｽﾅｯﾌﾟﾘﾝｸﾞ	4	
17	62073-82051		SEAL,DUST	ｼｰﾙ	8	
18	62073-82061		RETAINER	ﾘﾃｰﾅ	8	
19	04901-00160		FITTING	ﾌｨｯﾃｨﾝｸﾞ	4	
20	22199-12401		CAP	ｷｬｯﾌﾟ	4	
21	62516-12261		PIN	ﾋﾟﾝ	4	
22	02270-06040		PIN,SPRING	ﾋﾟﾝ	8	
23	63163-80501		REST,BACK	ﾊﾞｯｸﾚｽﾄ	1	
-	63163-80511		REST,BACK	ﾊﾞｯｸﾚｽﾄ	1	[FSW]
-	63163-80801		REST,BACK	ﾊﾞｯｸﾚｽﾄ	1	[HBF130](WITHOUT FSW)
-	63163-80811		REST,BACK	ﾊﾞｯｸﾚｽﾄ	1	[HBF140](WITHOUT FSW)

FIG.24 FORK SHIFT [FS28A,FS29A,FS31A]

(A503FS10) フォークシフト

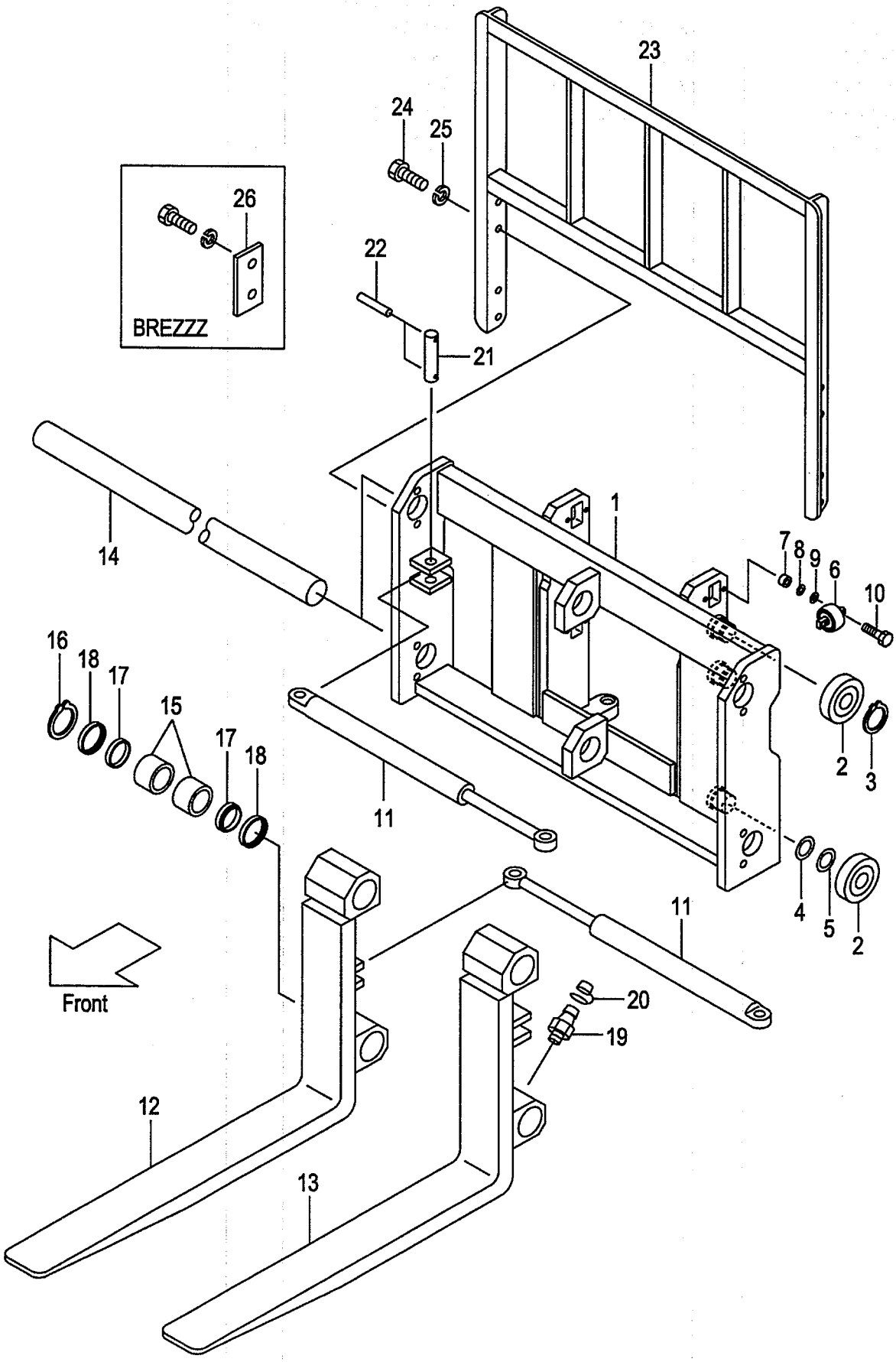

A:FS31A(VM/J)
B:FS28A(VFM/J)
C:FS29A(VFHM/J)

FIG.24
(A503FS10)

Item No	Part No.	Mark	Description		Req'd	Remarks : Serial No.
-	63163-80821		REST,BACK	ﾊﾞｯｸﾚｽﾄ	1	[HBF150](WITHOUT FSW)
24	01100-14030		BOLT	ﾎﾞﾙﾄ	8	
25	02010-00014		WASHER	ﾜｯｼｬ	8	
26	62263-82051		PLATE	ﾌﾟﾚｰﾄ	4	[BREZZZ]
27	02432-01008	+	RIVET	ﾘﾍﾞｯﾄ	4	
28	63110-18901	+	PLATE,LOAD CHART	ﾌﾟﾚｰﾄ	1	
-	63110-18911	+	PLATE,LOAD CHART	ﾌﾟﾚｰﾄ	1	[EXA/ENGLISH]
-	514A3-82301	+	PLATE,LOAD CHART	ﾌﾟﾚｰﾄ	1	[(EXB,EXC,EXE,EXN)/ENGLISH]
-	524T3-84031	+	PLATE,LOAD CHART	ﾌﾟﾚｰﾄ	1	(RUSSIAN)
-	63110-18921	+	PLATE,LOAD CHART	ﾌﾟﾚｰﾄ	1	(CHINESE)
-	514A3-82321	+	PLATE,LOAD CHART	ﾌﾟﾚｰﾄ	1	(GERMAN)
-	514A3-82341	+	PLATE,LOAD CHART	ﾌﾟﾚｰﾄ	1	(FRENCH)
-	514A3-82331	+	PLATE,LOAD CHART	ﾌﾟﾚｰﾄ	1	(SPANISH)
-	514A3-82361	+	PLATE,LOAD CHART	ﾌﾟﾚｰﾄ	1	(DANISH)
-	514A3-82381	+	PLATE,LOAD CHART	ﾌﾟﾚｰﾄ	1	(GREEK)
-	514A3-82371	+	PLATE,LOAD CHART	ﾌﾟﾚｰﾄ	1	(ITALIAN)
-	514A3-82351	+	PLATE,LOAD CHART	ﾌﾟﾚｰﾄ	1	(DUTCH)
-	514A3-82391	+	PLATE,LOAD CHART	ﾌﾟﾚｰﾄ	1	(PORTUGUESE)
29	09210-10300	+	PLATE,NAME	ﾌﾟﾚｰﾄ	1	
-	09210-10300	+	PLATE,NAME	ﾌﾟﾚｰﾄ	1	(ENGLISH)
-	63110-32111	+	PLATE,NAME	ﾌﾟﾚｰﾄ	1	(RUSSIAN)
-	09201-06201	+	PLATE,NAME	ﾌﾟﾚｰﾄ	1	(CHINESE)
-	63110-19211	+	PLATE,NAME	ﾌﾟﾚｰﾄ	1	(GERMAN)
-	63110-19251	+	PLATE,NAME	ﾌﾟﾚｰﾄ	1	(FRENCH)
-	63110-19231	+	PLATE,NAME	ﾌﾟﾚｰﾄ	1	(SPANISH)
-	63110-19291	+	PLATE,NAME	ﾌﾟﾚｰﾄ	1	(DANISH)
-	63110-19331	+	PLATE,NAME	ﾌﾟﾚｰﾄ	1	(GREEK)
-	63110-19311	+	PLATE,NAME	ﾌﾟﾚｰﾄ	1	(ITALIAN)
-	63110-19271	+	PLATE,NAME	ﾌﾟﾚｰﾄ	1	(DUTCH)
-	63110-19351	+	PLATE,NAME	ﾌﾟﾚｰﾄ	1	(PORTUGUESE)
30	63110-19941	+	DECAL	ﾃﾞｶﾙ	1	
31	63110-19951	+	DECAL	ﾃﾞｶﾙ	1	
32	214A7-42181	+	KNOB	ﾉﾌﾞ	2	
33	62063-87001	+	DECAL,CAUTION	ﾃﾞｶﾙ	1	
34	27419-12072	+	DECAL,CAUTION	ﾃﾞｶﾙ	2	

FIG.25 CYLINDER [FS28A,FS29A,FS31A]

(A503FS20) ｼﾘﾝﾀﾞ

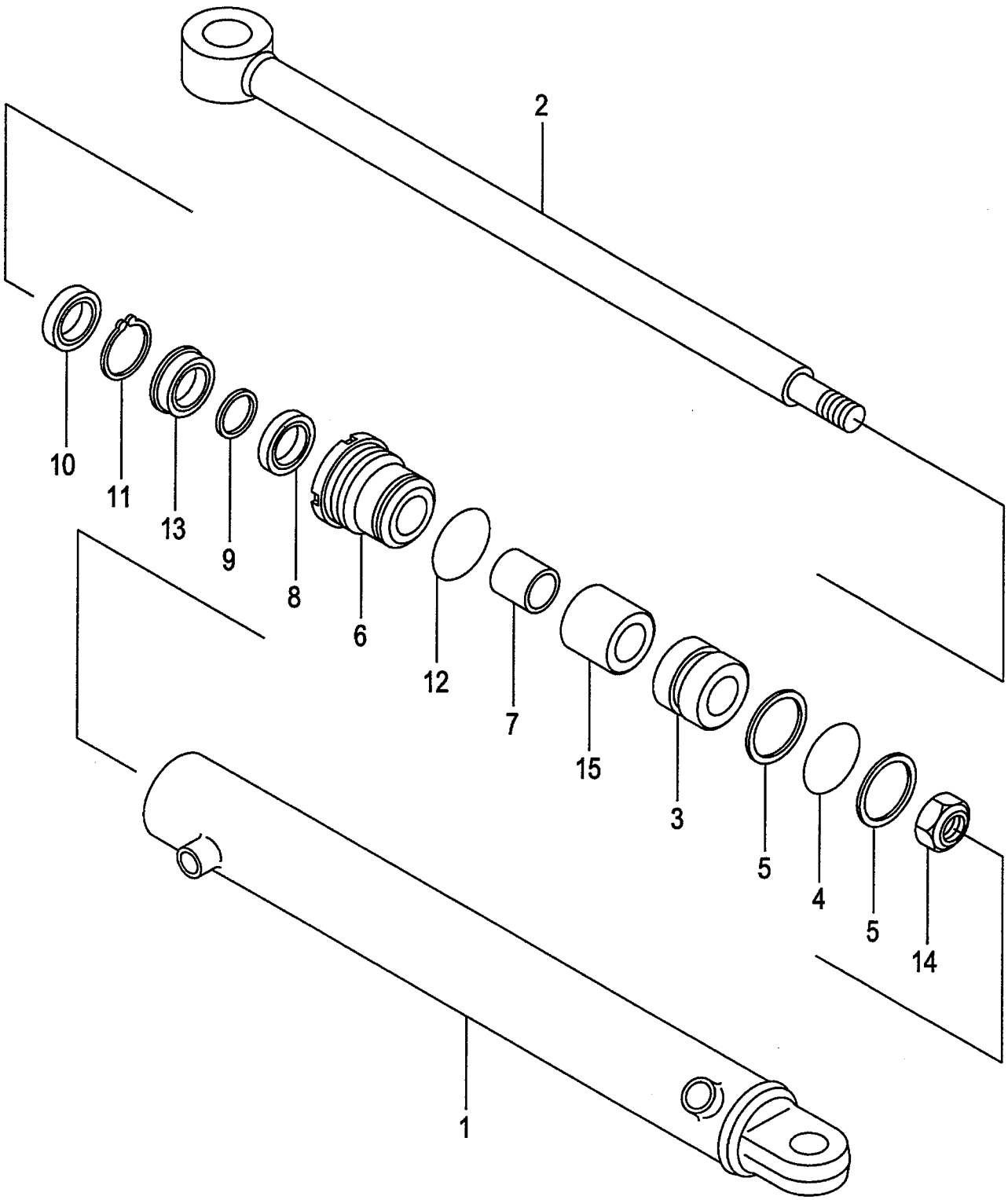

A:FS31A(VM/J)
B:FS28A(VFM/J)
C:FS29A(VFHM/J)

FIG.25
(A503FS20)

Item No	Part No.	Mark	Description		Req'd	Remarks : Serial No.
A1	63163-80602		CYL-ASSY	ｼﾘﾝﾀﾞｱｯｾﾝ	2	INC.1-15
-	62063-80702		CYL-ASSY	ｼﾘﾝﾀﾞｱｯｾﾝ	2	[FSW] INC.1-14
1	62063-80612		TUBE	ﾁｭｰﾌﾞ	2	
-	62063-80712		TUBE	ﾁｭｰﾌﾞ	2	[FSW]
2	62063-80621		ROD,PISTON	ﾛｯﾄﾞ	2	
-	62063-80721		ROD,PISTON	ﾛｯﾄﾞ	2	[FSW]
3	62063-82651		PISTON	ﾋﾟｽﾄﾝ	2	
4	03300-00390		O-RING	Oﾘﾝｸﾞ	2	
5	27738-52091		RING,BACK-UP	ﾘﾝｸﾞ	4	
A2	256A8-42081		CAP-ASSY	ｷｬｯﾌﾟｱｯｾﾝ	2	INC.6-13
6	256A8-42091		CAP	ｷｬｯﾌﾟ	2	
7	22553-12031		BUSHING	ﾌﾞｯｼﾝｸﾞ	2	
8	29568-52081	*	PACKING	ﾊﾟｯｷﾝｸﾞ	2	
9	29568-52041	*	RING,BACK-UP	ﾘﾝｸﾞ	2	
10	29568-52091	*	SEAL	ｼｰﾙ	2	
11	02110-00042	*	RING,SNAP	ｽﾅｯﾌﾟﾘﾝｸﾞ	2	
12	03350-00400	*	O-RING	Oﾘﾝｸﾞ	2	
13	29568-52051		RETAINER	ﾘﾃｰﾅ	2	
14	256C8-42081		NUT	ﾅｯﾄ	2	
15	62063-82661		SPACER	ｽﾍﾟｰｻ	2	(WITHOUT FSW)
K1	273A8-99802		KIT,REPAIR	ﾘﾍﾟｱｷｯﾄ	2	INC.8-12

FIG.26 HYDRAULIC LINE (CONNECTOR-CYLINDER)

(A503FS30) ﾊｲﾄﾞﾛﾘｯｸﾗｲﾝ (ｺﾈｸﾀｰｼﾘﾝﾀﾞｰ)

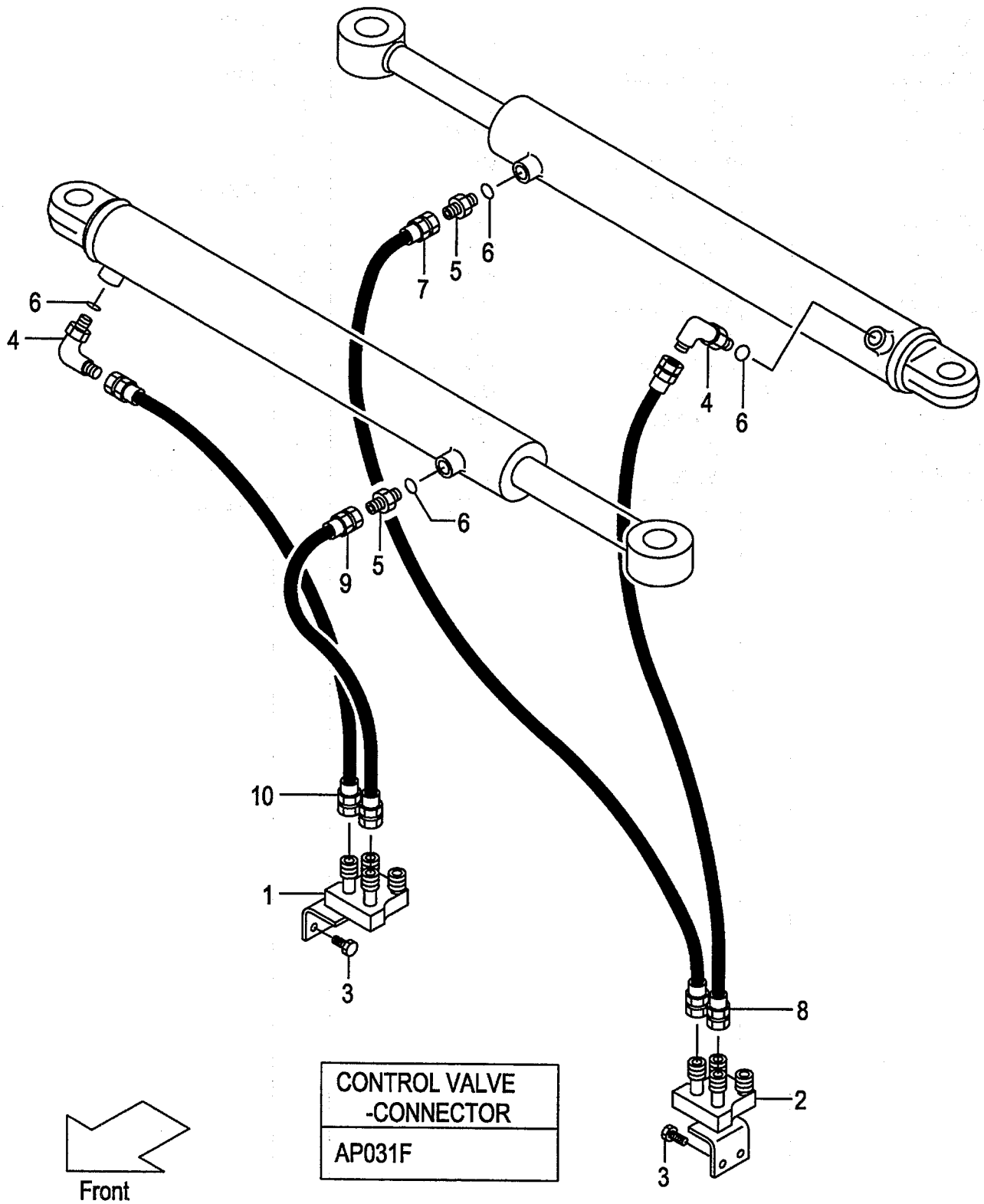

A:FS31A(VM/J)

Item No	Part No.	Mark	Description		Req'd	Remarks : Serial No.
1	621F0-12061		STUD	ｽﾀｯﾄﾞ	1	
2	621F0-12071		STUD	ｽﾀｯﾄﾞ	1	
3	01184-10025		BOLT & WASHER	ﾎﾞﾙﾄ&ﾜｯｼｬ	4	
4	04150-00202		ELBOW	ｴﾙﾎﾞ	2	
5	04134-00202		NIPPLE	ﾆｯﾌﾟﾙ	2	
6	03320-00110		O-RING	Oﾘﾝｸﾞ	4	
7	63130-31050		HOSE	ﾎｰｽ	1	
8	63130-31060		HOSE	ﾎｰｽ	1	
-	63130-31075		HOSE	ﾎｰｽ	1	[FSW]
10	63130-31070		HOSE	ﾎｰｽ	1	
-	63130-31085		HOSE	ﾎｰｽ	1	[FSW]

FIG.27 HYDRAULIC LINE (CONNECTOR-CYLINDER)[VM/SSV]

(A503FS40) ﾊｲﾄﾞﾛﾘｯｸﾗｲﾝ (ｺﾈｸﾀｰｼﾘﾝﾀﾞ)

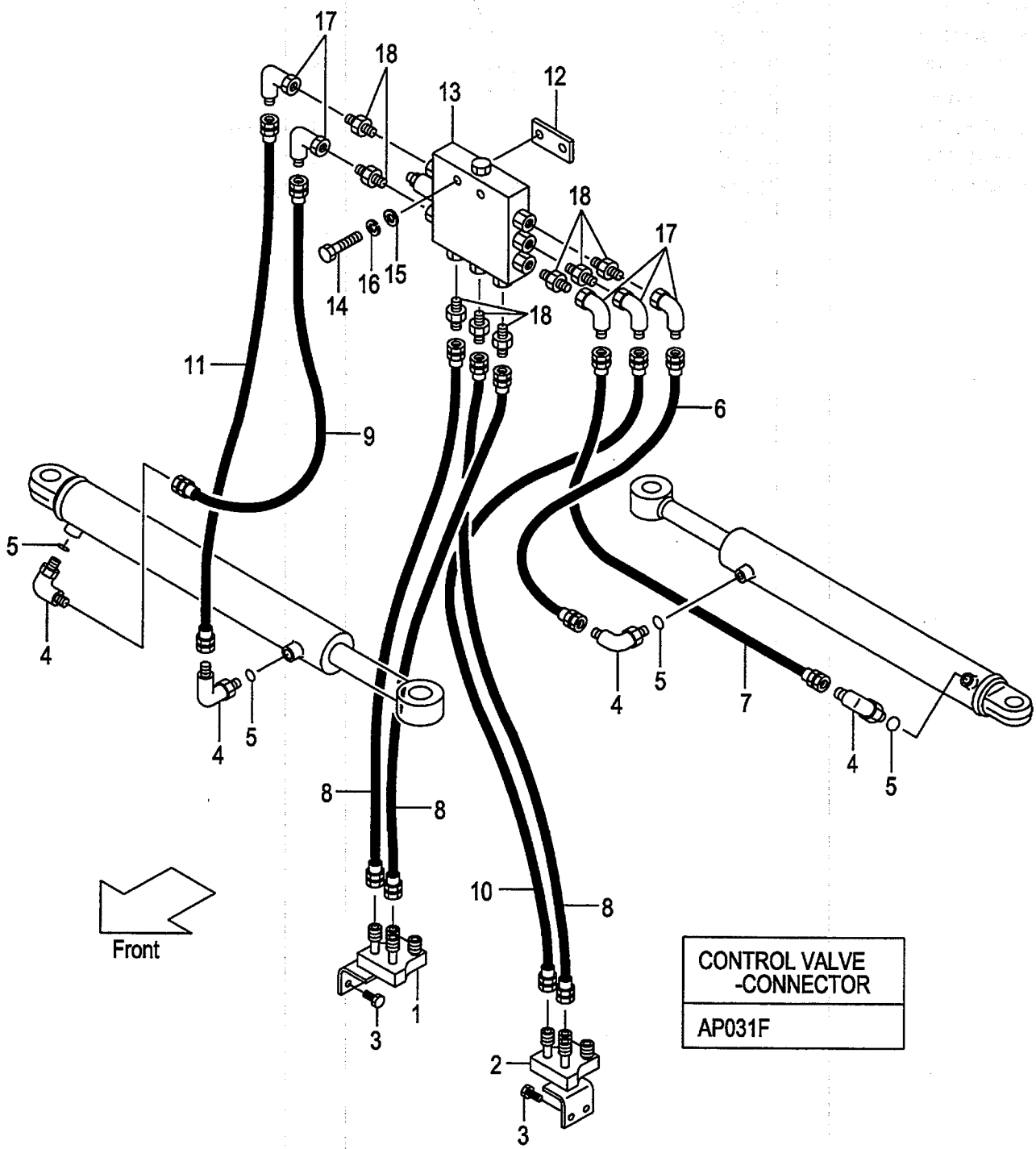

A:FS31A(VM/J)

Item No	Part No.	Mark	Description		Req'd	Remarks : Serial No.
1	621F0-12061		STUD	ｽﾀｯﾄﾞ	1	[SSV]
2	621F0-12071		STUD	ｽﾀｯﾄﾞ	1	[SSV]
3	01184-10025		BOLT & WASHER	ﾎﾞﾙﾄ&ﾜｯｼｬ	4	[SSV]
4	63110-12351		ELBOW	ｴﾙﾎﾞ	4	[SSV]
5	03320-00110		O-RING	Oﾘﾝｸﾞ	4	[SSV]
6	63130-31035		HOSE	ﾎｰｽ	1	[SSV]
7	63130-31040		HOSE	ﾎｰｽ	1	[SSV]
-	63130-31055		HOSE	ﾎｰｽ	1	[SSV][FSW]
8	63130-31040		HOSE	ﾎｰｽ	3	[SSV]
9	63130-31050		HOSE	ﾎｰｽ	1	[SSV]
-	63130-31065		HOSE	ﾎｰｽ	1	[SSV][FSW]
10	63130-31042		HOSE	ﾎｰｽ	1	[SSV]
11	63130-31040		HOSE	ﾎｰｽ	1	[SSV]
12	62246-24201		PLATE	ﾌﾟﾚｰﾄ	1	[SSV]
13	63130-12651		VALVE,SIDE-SHIFT	ﾊﾞﾙﾌﾞ	1	[SSV]
14	01100-08045		BOLT	ﾎﾞﾙﾄ	2	[SSV]
15	02000-00008		WASHER	ﾜｯｼｬ	2	[SSV]
16	02010-00008		WASHER	ﾜｯｼｬ	2	[SSV]
17	62150-14301		ELBOW	ｴﾙﾎﾞ	5	[SSV]
18	53110-12491		NIPPLE	ﾆｯﾌﾟﾙ	8	[SSV]

FIG.28 HYDRAULIC LINE (CONNECTOR-CYLINDER)[VFM]

(A503FS50) ﾊｲﾄﾞﾛﾘｯｸﾗｲﾝ (ｺﾈｸﾀｰｼﾘﾝﾀﾞｰ)

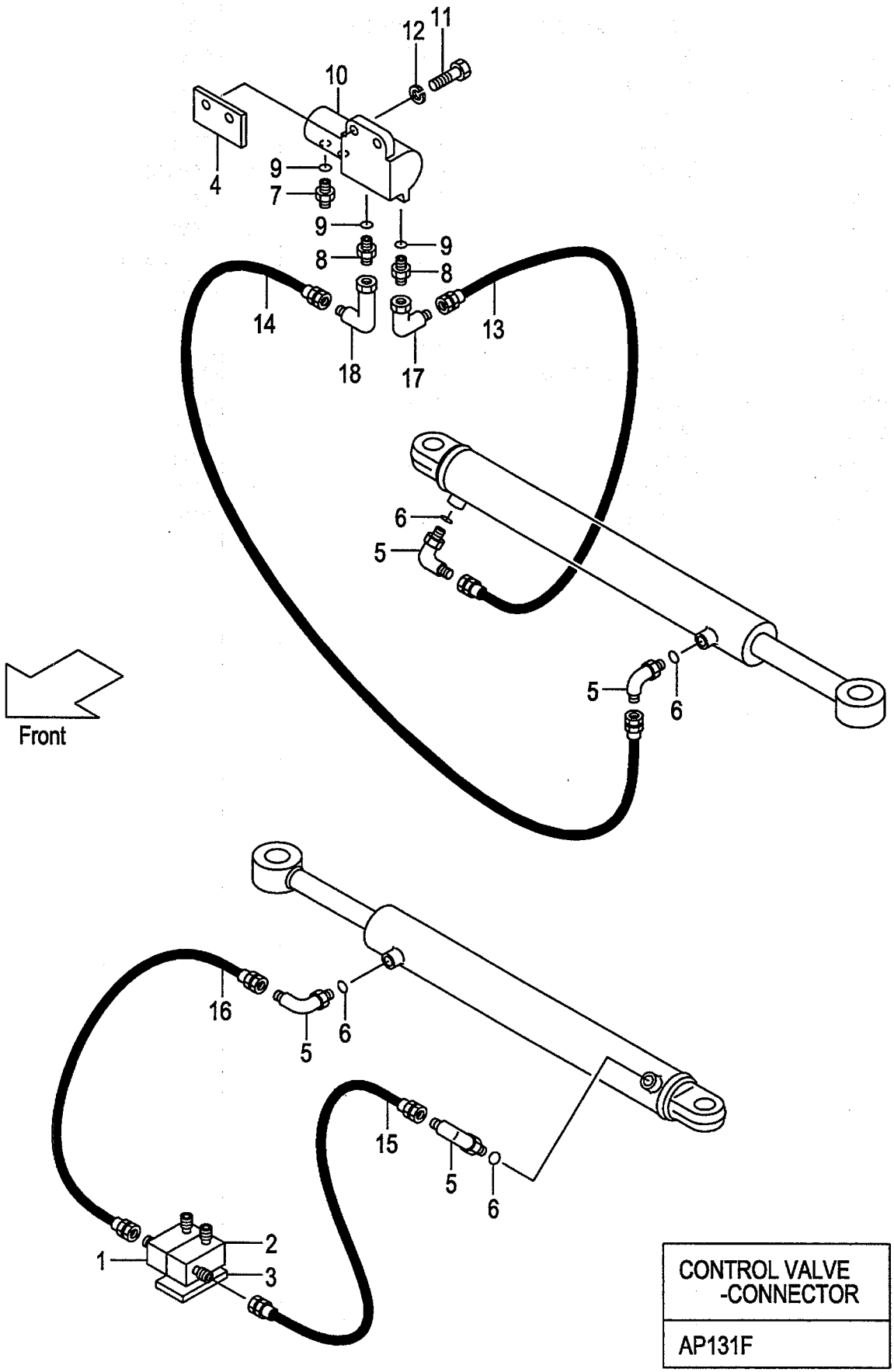

A:FS28A(VFM/J)

Item No	Part No.	Mark	Description		Req'd	Remarks : Serial No.
1	63110-14751		STUD	ｽﾀｯﾄﾞ	1	
2	63110-14731		STUD	ｽﾀｯﾄﾞ	1	
3	62386-12211		PLATE	ﾌﾟﾚｰﾄ	1	
4	62150-12791		BRACKET	ﾌﾞﾗｹｯﾄ	1	
5	63110-12351		ELBOW	ｴﾙﾎﾞ	4	
6	03320-00110		O-RING	Oﾘﾝｸﾞ	4	
7	63110-12281		NIPPLE	ﾆｯﾌﾟﾙ	2	
8	04134-00303		NIPPLE	ﾆｯﾌﾟﾙ	2	
9	03320-00140		O-RING	Oﾘﾝｸﾞ	4	
10	63130-15103		BLOCK,JUNCTION	ﾌﾞﾛｯｸ	1	SEE FIG.30
11	01100-12020		BOLT	ﾎﾞﾙﾄ	2	
12	02010-00012		WASHER	ﾜｯｼｬ	2	
13	63130-21055		HOSE	ﾎｰｽ	1	
-	63130-21070		HOSE	ﾎｰｽ	1	[FSW]
14	63130-21050		HOSE	ﾎｰｽ	1	
15	63130-21045		HOSE	ﾎｰｽ	1	
-	63130-21075		HOSE	ﾎｰｽ	1	[FSW]
16	63130-21035		HOSE	ﾎｰｽ	1	
-	63130-21050		HOSE	ﾎｰｽ	1	[FSW]
17	04150-10303		ELBOW	ｴﾙﾎﾞ	1	
18	04150-00303		ELBOW	ｴﾙﾎﾞ	1	

FIG.29 HYDRAULIC LINE (CONNECTOR-CYLINDER)[VFHM]

(A503FS60) ﾊｲﾄﾞﾛﾘｯｸﾗｲﾝ (ｺﾈｸﾀｰｼﾘﾝﾀﾞ)

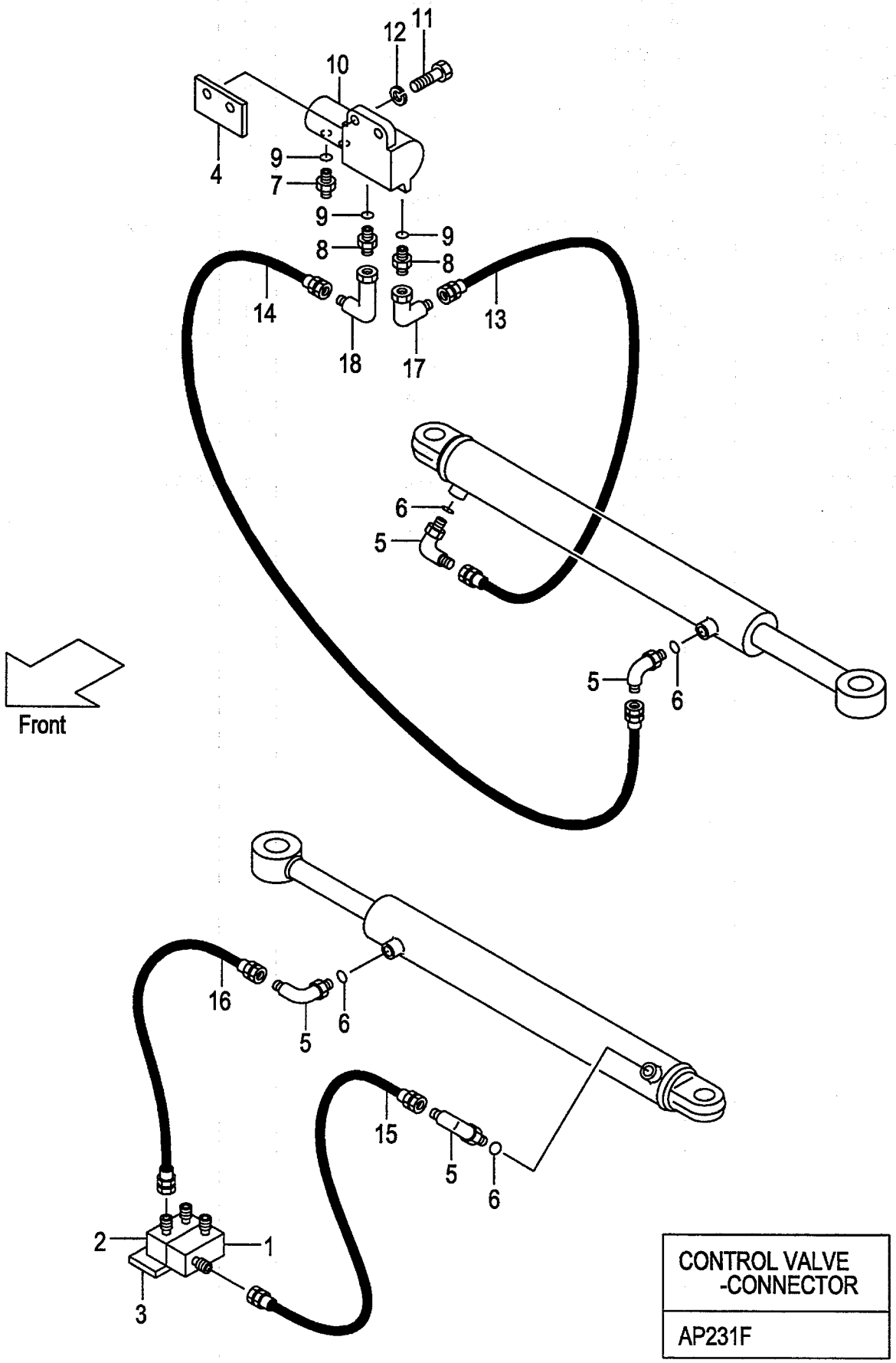

A:FS29A(VFHM/J)

Item No	Part No.	Mark	Description		Req'd	Remarks : Serial No.
1	63110-14731		STUD	ｽﾀｯﾄﾞ	1	
2	62150-12841		STUD	ｽﾀｯﾄﾞ	1	
3	62386-12211		PLATE	ﾌﾟﾚｰﾄ	1	
4	62150-12791		BRACKET	ﾌﾞﾗｹｯﾄ	1	
5	63110-12351		ELBOW	ｴﾙﾎﾞ	4	
6	03320-00110		O-RING	Oﾘﾝｸﾞ	4	
7	63110-12281		NIPPLE	ﾆｯﾌﾟﾙ	2	
8	04134-00303		NIPPLE	ﾆｯﾌﾟﾙ	2	
9	03320-00140		O-RING	Oﾘﾝｸﾞ	4	
10	63130-15103		BLOCK,JUNCTION	ﾌﾞﾛｯｸ	1	SEE FIG.30
11	01100-12020		BOLT	ﾎﾞﾙﾄ	2	
12	02010-00012		WASHER	ﾜｯｼｬ	2	
13	63130-21055		HOSE	ﾎｰｽ	1	
-	63130-21070		HOSE	ﾎｰｽ	1	[FSW]
14	63130-21050		HOSE	ﾎｰｽ	1	
15	63130-21045		HOSE	ﾎｰｽ	1	
-	63130-21075		HOSE	ﾎｰｽ	1	[FSW]
16	63130-21035		HOSE	ﾎｰｽ	1	
-	63130-21050		HOSE	ﾎｰｽ	1	[FSW]
17	04150-10303		ELBOW	ｴﾙﾎﾞ	1	
18	04150-00303		ELBOW	ｴﾙﾎﾞ	1	

FIG.30 JUNCTION BLOCK [FS28A,FS29A]

(A503FS70) ｼﾞｬﾝｸｼｮﾝﾌﾞﾛｯｸ

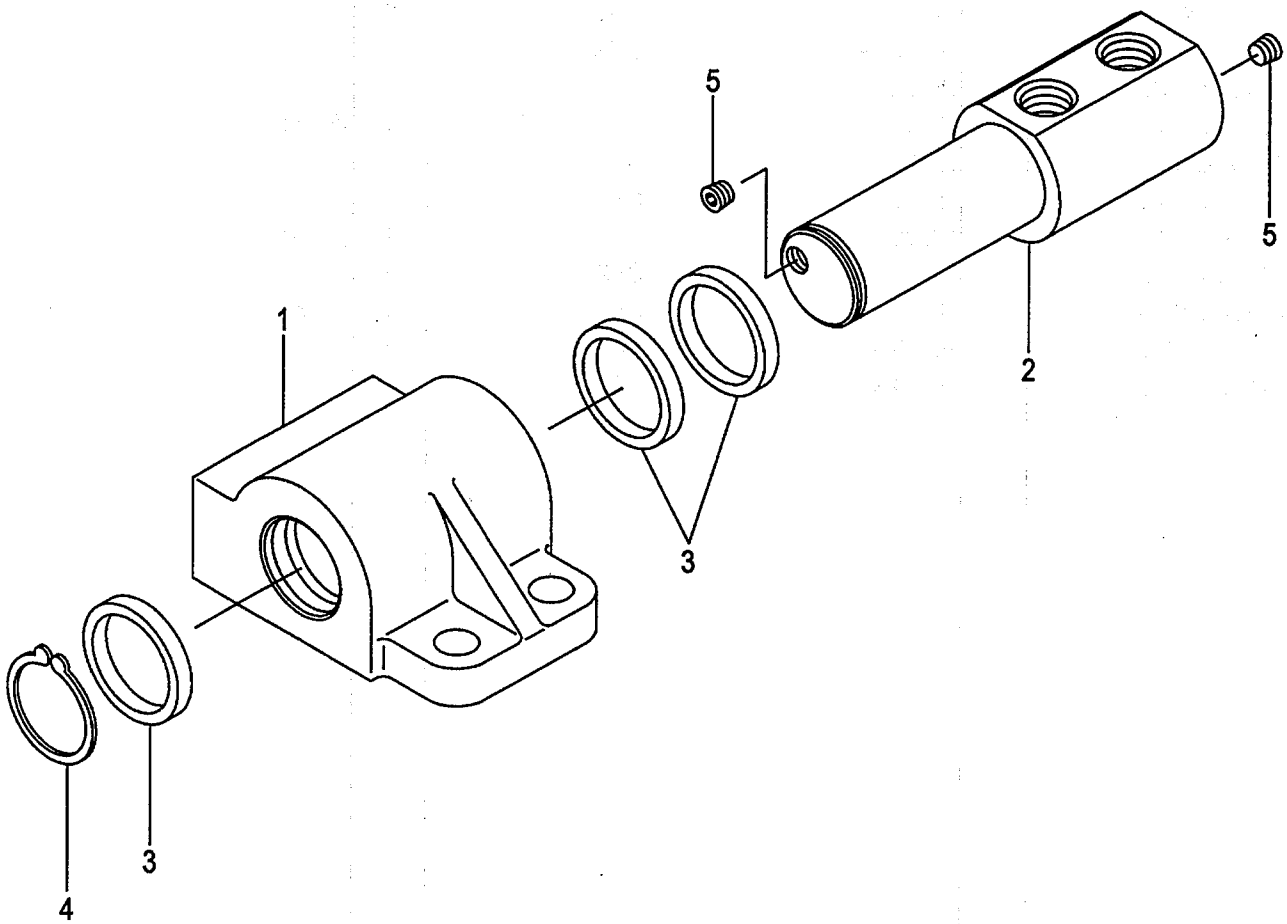

A:FS28A(VFM/J)
B:FS29A(VFHM/J)

FIG.30
(A503FS70)

Item No	Part No.	Mark	Description		Req'd	Remarks : Serial No.
A1	63130-15103		BLOCK-ASSY,JUNCTION	ｼﾞｬﾝｸｼｮﾝﾌﾞﾛｯｸｱｯｾﾝ	1	INC.1-5
1	63110-11521		HOUSING	ﾊｳｼﾞﾝｸﾞ	1	
2	63110-11531		SHAFT	ｼｬﾌﾄ	1	
3	63110-16301		SEAL	ｼｰﾙ	3	
4	02100-00030		RING,SNAP	ｽﾅｯﾌﾟﾘﾝｸﾞ	1	
5	63110-14511		PLUG	ﾌﾟﾗｸﾞ	2	

FIG.31 HINGED FORK [HF24A]

(A502HF10) ﾋﾝｼﾞﾄﾞﾌｫｰｸ

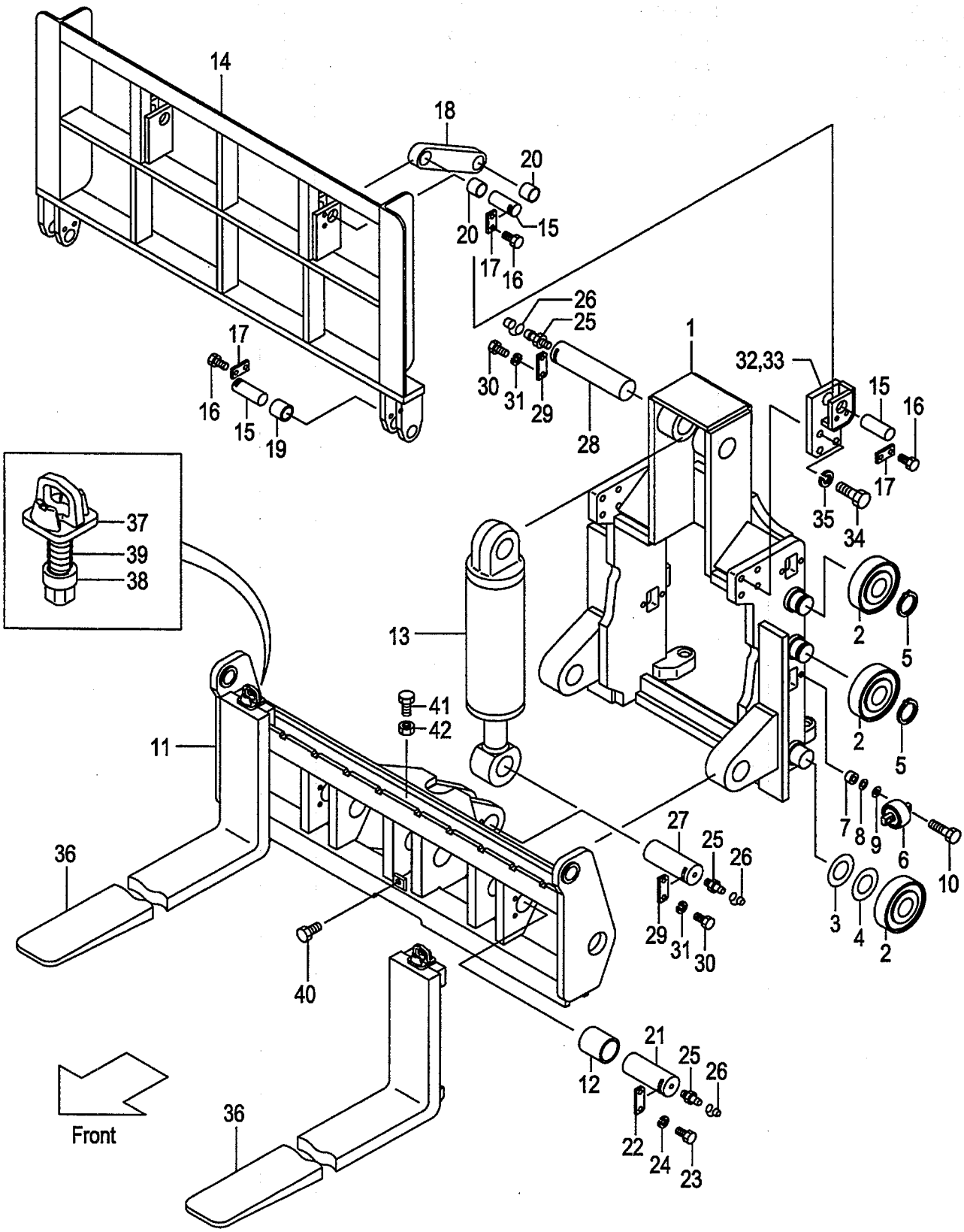

A:HF24A(VM/J)

Item No	Part No.	Mark	Description		Req'd	Remarks : Serial No.
A1	624A3-40001		FORK-ASSY,HINGED	ﾋﾝｼﾞﾄﾞﾌｫｰｸｱｯｾﾝ	1	INC.1-35
-	624A3-40021		FORK-ASSY,HINGED	ﾋﾝｼﾞﾄﾞﾌｫｰｸｱｯｾﾝ	1	[FC] INC.1-35
-	624A3-40011		FORK-ASSY,HINGED	ﾋﾝｼﾞﾄﾞﾌｫｰｸｱｯｾﾝ	1	[WFH] INC.1-35
-	624A3-40031		FORK-ASSY,HINGED	ﾋﾝｼﾞﾄﾞﾌｫｰｸｱｯｾﾝ	1	[FC/WFH] INC.1-35
1	624A3-40101		BRACKET	ﾌﾞﾗｹｯﾄ	1	
2	277P8-22051		ROLLER,END,119	ﾛｰﾗ	6	
-	577P3-74001		ROLLER,END,119	ﾛｰﾗ	6	[FC]
-	277P8-22061		ROLLER,END,119.5	ﾛｰﾗ	(4)	
-	577P3-74011		ROLLER,END,119.5	ﾛｰﾗ	(4)	[FC]
3	277P8-22071		SHIM	ｼﾑ	10	
4	277P8-22081		SHIM	ｼﾑ	10	
5	02100-00045		RING,SNAP	ｽﾅｯﾌﾟﾘﾝｸﾞ	4	
6	23458-32052		ROLLER,SIDE	ﾛｰﾗ	4	
-	514A3-71702		ROLLER,SIDE	ﾛｰﾗ	4	[FC]
7	22548-34031		SPACER	ｽﾍﾟｰｻ	8	
8	22548-34051		SHIM	ｼﾑ	10	
9	22548-34061		SHIM	ｼﾑ	10	
10	01184-12050		BOLT & WASHER	ﾎﾞﾙﾄ&ﾜｯｼｬ	8	
11	62463-40201		BAR,FINGER	ﾊﾞｰ	1	
-	62463-40301		BAR,FINGER	ﾊﾞｰ	1	[WFH]
12	24388-52031		BUSH	ﾌﾞｯｼﾝｸﾞ	2	
13	62453-40702		CYL	ｼﾘﾝﾀﾞ	1	SEE FIG.32
-	62453-40732		CYL	ｼﾘﾝﾀﾞ	1	[FC]SEE FIG.32
14	62463-40501		REST,BACK	ﾊﾞｯｸﾚｽﾄ	1	
-	62463-40601		REST,BACK	ﾊﾞｯｸﾚｽﾄ	1	[WFH]
15	62453-42711		PIN	ﾋﾟﾝ	6	
16	01184-10016		BOLT	ﾎﾞﾙﾄ	12	
17	23648-50161		PLATE	ﾌﾟﾚｰﾄ	6	
18	62453-42701		LINK	ﾘﾝｸ	2	
19	24238-52051		BUSH	ﾌﾞｯｼﾝｸﾞ	2	
20	27718-22491		BUSH	ﾌﾞｯｼﾝｸﾞ	4	
21	62433-42701		PIN	ﾋﾟﾝ	2	
22	25176-12361		PLATE	ﾌﾟﾚｰﾄ	2	
23	01103-10020		BOLT	ﾎﾞﾙﾄ	4	
24	02010-00010		WASHER	ﾜｯｼｬ	4	
25	04901-00100		FITTING	ﾌｨｯﾃｨﾝｸﾞ	4	
26	22199-12401		CAP	ｷｬｯﾌﾟ	4	
27	63633-42321		PIN	ﾋﾟﾝ	1	
28	62263-42721		PIN	ﾋﾟﾝ	1	
29	25176-12361		PLATE	ﾌﾟﾚｰﾄ	2	
30	01100-10020		BOLT	ﾎﾞﾙﾄ	4	
31	02010-00010		WASHER	ﾜｯｼｬ	4	
32	62453-42652		BRACKET,LH	ﾌﾞﾗｹｯﾄ	1	
33	62453-42662		BRACKET,RH	ﾌﾞﾗｹｯﾄ	1	
34	01106-14040		BOLT	ﾎﾞﾙﾄ	8	
35	02011-00014		WASHER	ﾜｯｼｬ	8	
36	62243-40614		FORK	ﾌｫｰｸ	2	(L=920)
-	62243-40614		FORK	ﾌｫｰｸ	2	[LFH092]
-	62243-40624		FORK	ﾌｫｰｸ	2	[LFH107]
-	62243-40634		FORK	ﾌｫｰｸ	2	[LFH122]

FIG.31 HINGED FORK [HF24A]

(A502HF10) ﾋﾝｼﾞﾄﾞﾌｫｰｸ

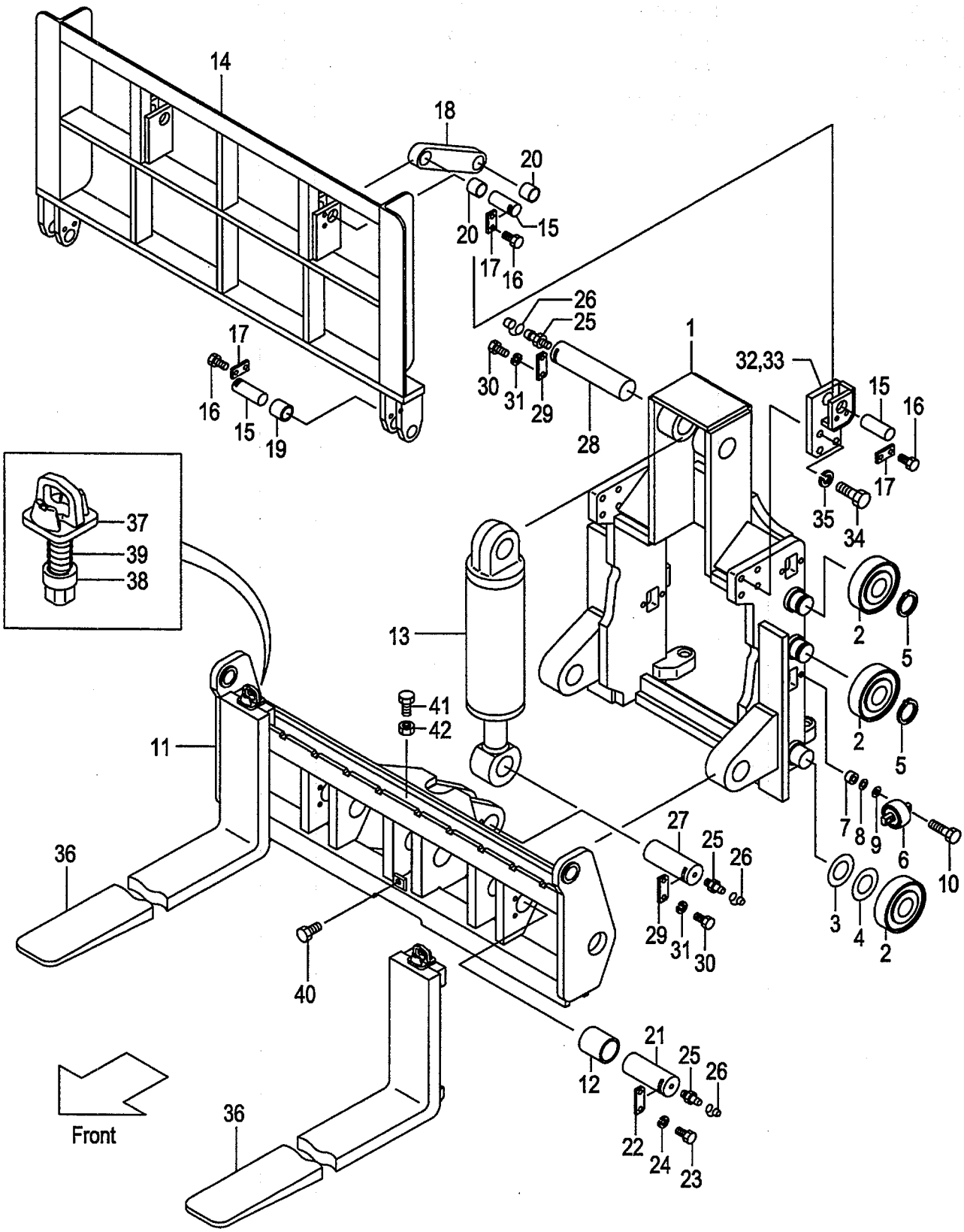

A:HF24A(VM/J)

Item No	Part No.	Mark	Description		Req'd	Remarks : Serial No.
-	62243-40644		FORK	ﾌｫｰｸ	2	[LFH137]
-	62243-40654		FORK	ﾌｫｰｸ	2	[LFH152]
-	62243-40664		FORK	ﾌｫｰｸ	2	[LFH167]
-	62243-40671		FORK	ﾌｫｰｸ	2	[LFH182]
A2	214A8-11002		STOPPER-ASSY,FORK	ﾌｫｰｸｽﾄｯﾊﾟｱｯｾﾝ	2	INC.37-39
37	214A8-12002		HEAD	ﾍｯﾄﾞ	2	
38	214A8-12012		STOPPER	ｽﾄｯﾊﾟ	2	
39	214A8-12032		SPRING	ｽﾌﾟﾘﾝｸﾞ	2	
40	01184-12025		BOLT	ﾎﾞﾙﾄ	1	
41	01120-08025		BOLT	ﾎﾞﾙﾄ	1	[EXD][EXE][EXN][EXH]
42	01400-00008		NUT	ﾅｯﾄ	1	[EXD][EXE][EXN][EXH]
43	63110-18901	+	CHART,LOAD	ﾁｬｰﾄ	1	
-	63110-18911	+	CHART,LOAD	ﾁｬｰﾄ	1	[EXA/ENGLISH]
-	514A3-82301	+	CHART,LOAD	ﾁｬｰﾄ	1	[EXB/ENGLISH][EXC/ENGLISH]
-	514A3-82301	+	CHART,LOAD	ﾁｬｰﾄ	1	[EXE/ENGLISH][EXN/ENGLISH]
-	524T3-84031	+	CHART,LOAD	ﾁｬｰﾄ	1	(RUSSIAN)
-	63110-18921	+	CHART,LOAD	ﾁｬｰﾄ	1	(CHINESE)
-	514A3-82321	+	CHART,LOAD	ﾁｬｰﾄ	1	(GERMAN)
-	514A3-82341	+	CHART,LOAD	ﾁｬｰﾄ	1	(FRENCH)
-	514A3-82331	+	CHART,LOAD	ﾁｬｰﾄ	1	(SPANISH)
-	514A3-82361	+	CHART,LOAD	ﾁｬｰﾄ	1	(DANISH)
-	514A3-82381	+	CHART,LOAD	ﾁｬｰﾄ	1	(GREEK)
-	514A3-82371	+	CHART,LOAD	ﾁｬｰﾄ	1	(ITALIAN)
-	514A3-82351	+	CHART,LOAD	ﾁｬｰﾄ	1	(DUTCH)
-	514A3-82391	+	CHART,LOAD	ﾁｬｰﾄ	1	(PORTUGUESE)
44	02432-01008	+	RIVET	ﾘﾍﾞｯﾄ	4	
45	63110-19831	+	DECAL	ﾃﾞｶﾙ	1	
46	214A7-42181	+	KNOB	ﾉﾌﾞ	1	
47	09210-10300	+	PLATE,NAME	ﾌﾟﾚｰﾄ	1	
-	09210-10300	+	PLATE,NAME	ﾌﾟﾚｰﾄ	1	(ENGLISH)
-	63110-32111	+	PLATE,NAME	ﾌﾟﾚｰﾄ	1	(RUSSIAN)
-	09201-06201	+	PLATE,NAME	ﾌﾟﾚｰﾄ	1	(CHINESE)
-	63110-19211	+	PLATE,NAME	ﾌﾟﾚｰﾄ	1	(GERMAN)
-	63110-19251	+	PLATE,NAME	ﾌﾟﾚｰﾄ	1	(FRENCH)
-	63110-19231	+	PLATE,NAME	ﾌﾟﾚｰﾄ	1	(SPANISH)
-	63110-19291	+	PLATE,NAME	ﾌﾟﾚｰﾄ	1	(DANISH)
-	63110-19331	+	PLATE,NAME	ﾌﾟﾚｰﾄ	1	(GREEK)
-	63110-19311	+	PLATE,NAME	ﾌﾟﾚｰﾄ	1	(ITALIAN)
-	63110-19271	+	PLATE,NAME	ﾌﾟﾚｰﾄ	1	(DUTCH)
-	63110-19351	+	PLATE,NAME	ﾌﾟﾚｰﾄ	1	(PORTUGUESE)
48	62263-47001	+	DECAL,CAUTION	ﾃﾞｶﾙ	1	
49	27419-12072	+	DECAL,CAUTION	ﾃﾞｶﾙ	2	

FIG.32 CYLINDER [HF24A]

(A502HF20) ｼﾘﾝﾀﾞ

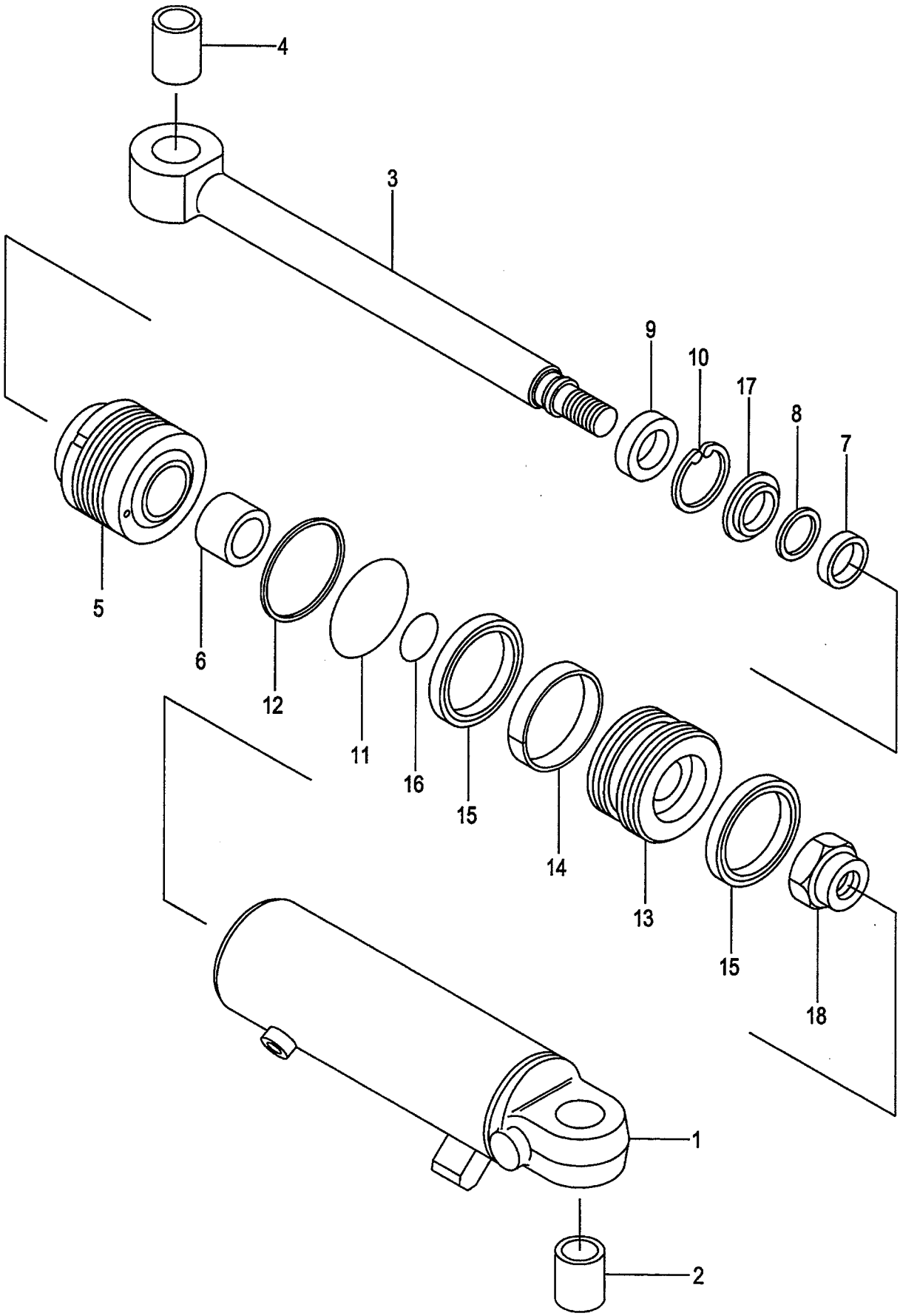

A:HF24A(VM/J)

Item No	Part No.	Mark	Description		Req'd	Remarks : Serial No.
A1	62453-40702		CYL-ASSY	ｼﾘﾝﾀﾞｱｯｾﾝ	1	INC.1-18
-	62453-40732		CYL-ASSY	ｼﾘﾝﾀﾞｱｯｾﾝ	1	[FC] INC.1-18
1	62453-40712		TUBE	ﾁｭｰﾌﾞ	1	INC.2
2	23816-10561		BUSH	ﾌﾞｯｼﾝｸﾞ	1	
3	62453-40722		ROD,PISTON	ﾛｯﾄﾞ	1	INC.4
-	62453-40742		ROD,PISTON	ﾛｯﾄﾞ	1	[FC] INC.4
4	25178-52041		BUSH	ﾌﾞｯｼﾝｸﾞ	1	
5	25788-52052		CAP	ｷｬｯﾌﾟ	1	
6	23460-53171		BUSH	ﾌﾞｯｼﾝｸﾞ	1	
7	24328-52201	*	PACKING	ﾊﾟｯｷﾝｸﾞ	1	
8	24328-52211	*	RING,BACK-UP	ﾘﾝｸﾞ	1	
9	224T8-46001	*	SEAL	ｼｰﾙ	1	
10	02110-00072	*	RING,SNAP	ｽﾅｯﾌﾟﾘﾝｸﾞ	1	
11	03350-01100	*	O-RING	Oﾘﾝｸﾞ	1	
12	24388-52061	*	RING,BACK-UP	ﾘﾝｸﾞ	1	
13	62453-42631		PISTON	ﾋﾟｽﾄﾝ	1	
14	22658-52081	*	WEARING	ｳｴｱﾘﾝｸﾞ	1	
15	25788-52151	*	PACKING	ﾊﾟｯｷﾝｸﾞ	2	
16	03350-00350		O-RING	Oﾘﾝｸﾞ	1	
17	24328-52221		RETAINER	ﾘﾃｰﾅ	1	
18	25818-52081		NUT	ﾅｯﾄ	1	
K1	25788-59805		KIT,REPAIR	ﾘﾍﾟｱｷｯﾄ	1	INC.7-12,14,15

FIG.33 HYDRAULIC LINE (CONNECTOR-CYLINDER)

(A502HF30) ﾊｲﾄﾞﾛﾘｯｸﾗｲﾝ (ｺﾈｸﾀｰｼﾘﾝﾀﾞ)

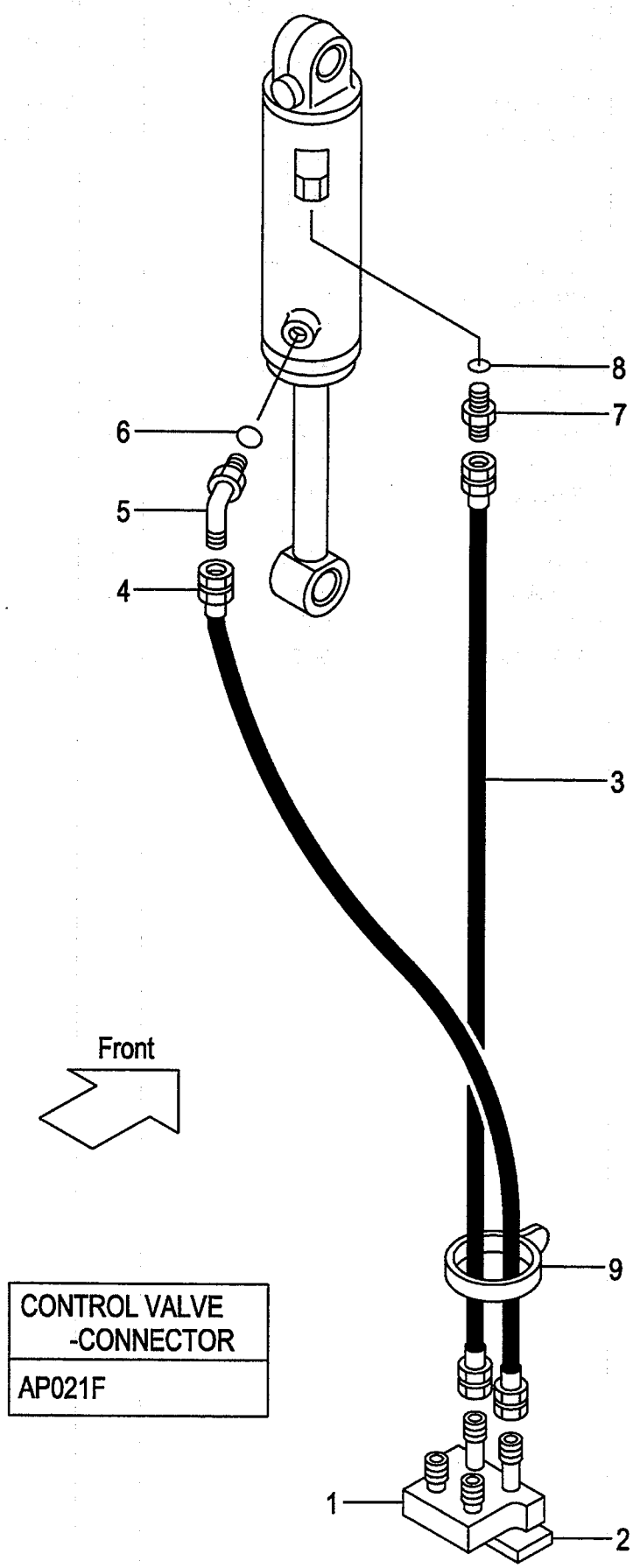

A:HF24A(VM/J)

Item No	Part No.	Mark	Description		Req'd	Remarks : Serial No.
1	63110-14661		STUD	ｽﾀｯﾄﾞ	1	
2	624A3-42501		PLATE	ﾌﾟﾚｰﾄ	1	
3	63130-21060		HOSE	ﾎｰｽ	1	
4	63130-21030		HOSE	ﾎｰｽ	1	
A1	04150-20303		ELBOW-ASSY	ｴﾙﾎﾞｱｯｾﾝ	1	INC.5,6
5	04150-00303		ELBOW	ｴﾙﾎﾞ	1	
6	03320-00140		O-RING	Oﾘﾝｸﾞ	1	
A2	04134-20303		NIPPLE-ASSY	ﾆｯﾌﾟﾙｱｯｾﾝ	1	INC.7,8
7	04134-00303		NIPPLE	ﾆｯﾌﾟﾙ	1	
8	03320-00140		O-RING	Oﾘﾝｸﾞ	1	
9	27262-42091		BAND	ﾊﾞﾝﾄﾞ	1	

FIG.34 HINGED FORK [HF21A,HF22A,HF23A]

(A502HF40) ﾋﾝｼﾞﾄﾞﾌｫｰｸ

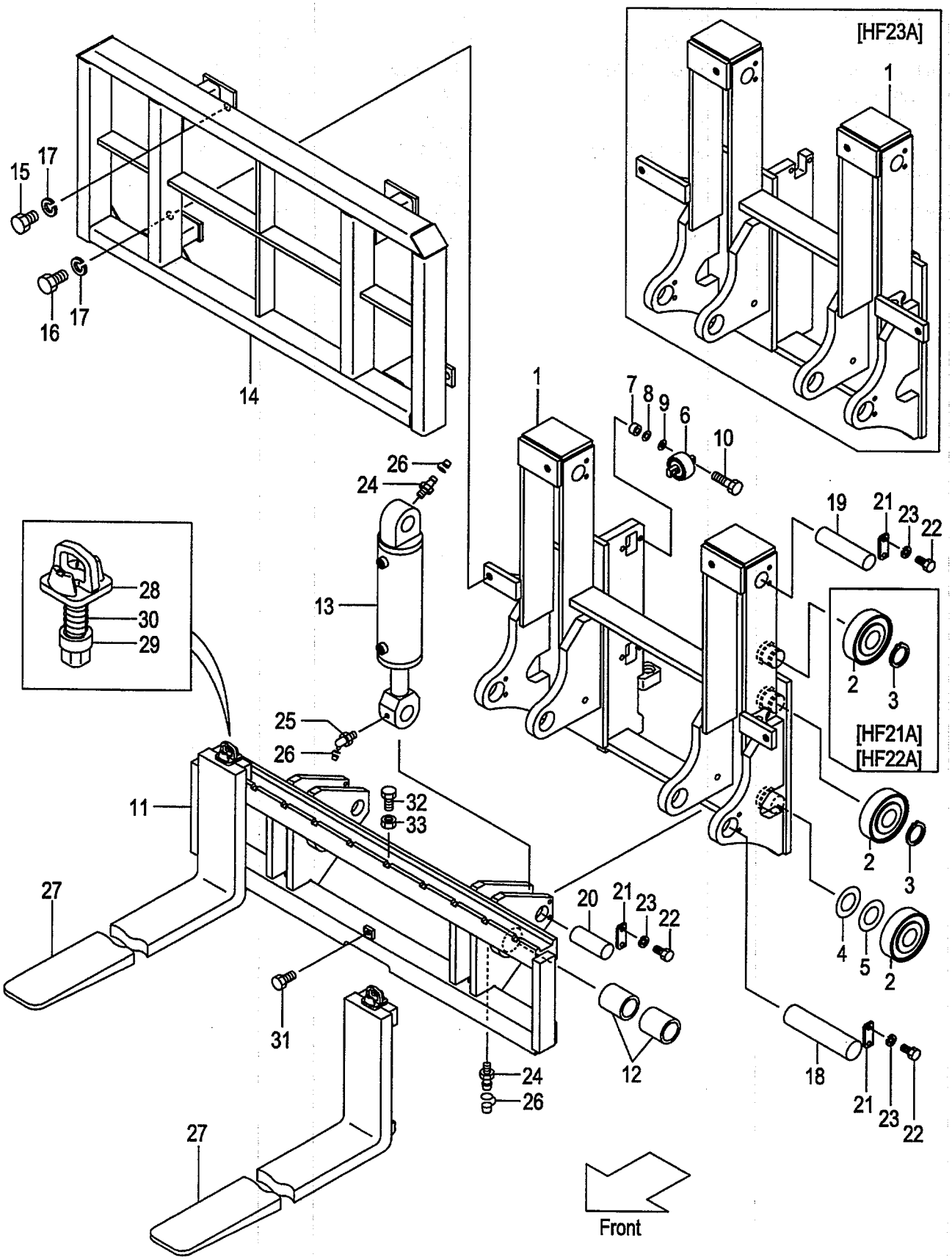

A:HF22A(VM/J)
B:HF21A(VFM/J)
C:HF23A(VFHM/J)

FIG.34
(A502HF40)

Item No	Part No.	Mark	Description		Req'd	Remarks : Serial No.
A1	622A3-40001		FORK-ASSY,HINGED	ﾋﾝｼﾞﾄﾞﾌｫｰｸｱｯｾﾝ	1	A INC.1-26
-	621A3-40001		FORK-ASSY,HINGED	ﾋﾝｼﾞﾄﾞﾌｫｰｸｱｯｾﾝ	1	B INC.1-26
-	623A3-40001		FORK-ASSY,HINGED	ﾋﾝｼﾞﾄﾞﾌｫｰｸｱｯｾﾝ	1	C INC.1-26
-	622A3-40011		FORK-ASSY,HINGED	ﾋﾝｼﾞﾄﾞﾌｫｰｸｱｯｾﾝ	1	A [WFH] INC.1-26
-	621A3-40011		FORK-ASSY,HINGED	ﾋﾝｼﾞﾄﾞﾌｫｰｸｱｯｾﾝ	1	B [WFH] INC.1-26
-	623A3-40011		FORK-ASSY,HINGED	ﾋﾝｼﾞﾄﾞﾌｫｰｸｱｯｾﾝ	1	C [WFH] INC.1-26
-	622A3-40021		FORK-ASSY,HINGED	ﾋﾝｼﾞﾄﾞﾌｫｰｸｱｯｾﾝ	1	A [FC] INC.1-26
-	621A3-40021		FORK-ASSY,HINGED	ﾋﾝｼﾞﾄﾞﾌｫｰｸｱｯｾﾝ	1	B [FC] INC.1-26
-	623A3-40021		FORK-ASSY,HINGED	ﾋﾝｼﾞﾄﾞﾌｫｰｸｱｯｾﾝ	1	C [FC] INC.1-26
-	622A3-40031		FORK-ASSY,HINGED	ﾋﾝｼﾞﾄﾞﾌｫｰｸｱｯｾﾝ	1	A [FC/WFH] INC.1-26
-	621A3-40031		FORK-ASSY,HINGED	ﾋﾝｼﾞﾄﾞﾌｫｰｸｱｯｾﾝ	1	B [FC/WFH] INC.1-26
-	623A3-40031		FORK-ASSY,HINGED	ﾋﾝｼﾞﾄﾞﾌｫｰｸｱｯｾﾝ	1	C [FC/WFH] INC.1-26
1	62273-40101		BRACKET	ﾌﾞﾗｹｯﾄ	1	A
-	62173-40101		BRACKET	ﾌﾞﾗｹｯﾄ	1	B
-	62373-40101		BRACKET	ﾌﾞﾗｹｯﾄ	1	C
2	277P8-22051		ROLLER,END,119	ﾛｰﾗ	6	A,B
-	277P8-22051		ROLLER,END,119	ﾛｰﾗ	4	C
-	577P3-74001		ROLLER,END,119	ﾛｰﾗ	6	A,B [FC]
-	577P3-74001		ROLLER,END,119	ﾛｰﾗ	4	C [FC]
-	277P8-22061		ROLLER,END,119.5	ﾛｰﾗ	(4)	
-	577P3-74011		ROLLER,END,119.5	ﾛｰﾗ	(4)	[FC]
3	02100-00045		RING,SNAP	ｽﾅｯﾌﾟﾘﾝｸﾞ	4	A,B
-	02100-00045		RING,SNAP	ｽﾅｯﾌﾟﾘﾝｸﾞ	2	C
4	277P8-22071		SHIM	ｼﾑ	10	
5	277P8-22081		SHIM	ｼﾑ	10	
6	23458-32052		ROLLER,SIDE	ﾛｰﾗ	4	
-	514A3-71702		ROLLER,SIDE	ﾛｰﾗ	4	[FC]
7	22548-34031		SPACER	ｽﾍﾟｰｻ	8	
8	22548-34051		SHIM	ｼﾑ	10	
9	22548-34061		SHIM	ｼﾑ	10	
10	01184-12050		BOLT & WASHER	ﾎﾞﾙﾄ&ﾜｯｼｬ	8	
11	62273-40201		BAR,FINGER	ﾊﾞｰ	1	A,B
-	62373-40201		BAR,FINGER	ﾊﾞｰ	1	C
-	62273-40211		BAR,FINGER	ﾊﾞｰ	1	A,B [WFH]

FIG.34 HINGED FORK [HF21A,HF22A,HF23A]

(A502HF40) ﾋﾝｼﾞﾄﾞﾌｫｰｸ

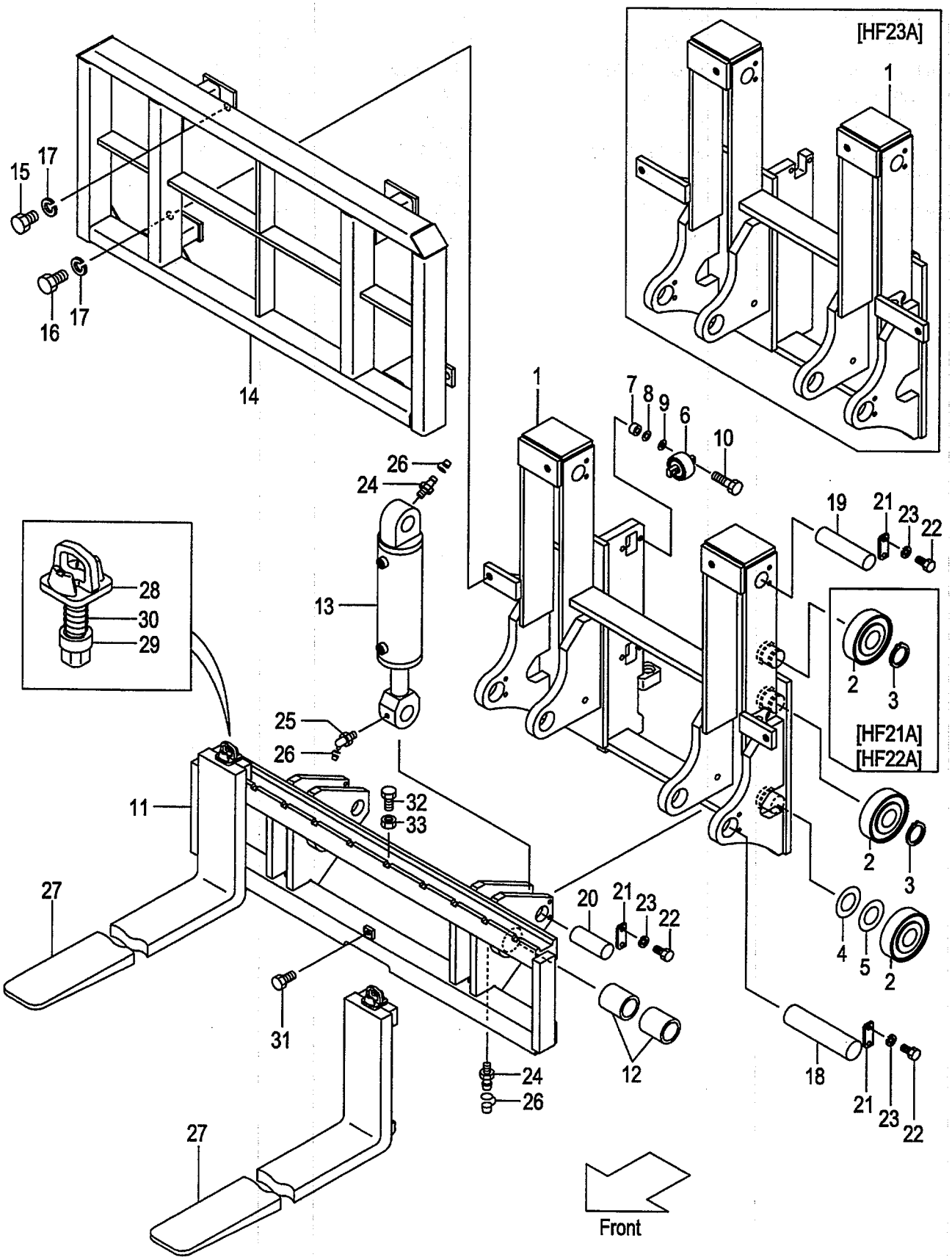

A:HF22A(VM/J)
B:HF21A(VFM/J)
C:HF23A(VFHM/J)

FIG.34
(A502HF40)

Item No	Part No.	Mark	Description		Req'd	Remarks : Serial No.
-	62373-40211		BAR,FINGER	バー	1	C
						[WFH]
12	25178-52041		BUSH	ブッシング	4	
13	62263-40901		CYL	シリンダ	2	SEE FIG.35
-	62263-40911		CYL	シリンダ	2	[FC]SEE FIG.35
14	62273-40501		REST,BACK	バックレスト	1	
-	62273-40601		REST,BACK	バックレスト	1	[WFH]
15	01103-16025		BOLT	ボルト	2	
16	01103-16030		BOLT	ボルト	2	
17	02011-00016		WASHER	ワッシャ	4	
18	62263-42721		PIN	ピン	2	
19	62243-42621		PIN	ピン	2	
20	63173-42721		PIN	ピン	2	
21	25176-12361		PLATE	プレート	6	
22	01103-10020		BOLT	ボルト	12	
23	02010-00010		WASHER	ワッシャ	12	
24	04901-00100		FITTING	フィッティング	4	
25	04901-00160		FITTING	フィッティング	2	
26	22199-12401		CAP	キャップ	6	
27	62243-40614		FORK	フォーク	2	(L=920)
-	62243-40614		FORK	フォーク	2	[LF092]
-	62243-40624		FORK	フォーク	2	[LF107]
-	62243-40634		FORK	フォーク	2	[LF122]
-	62243-40644		FORK	フォーク	2	[LF137]
-	62243-40654		FORK	フォーク	2	[LF152]
-	62243-40664		FORK	フォーク	2	[LF167]
-	62243-40671		FORK	フォーク	2	[LF182]
A2	214A8-11002		STOPPER-ASSY	ストッパアッセン	2	INC.28-30
28	214A8-12002		HEAD	ヘッド	2	
29	214A8-12012		STOPPER	ストッパ	2	
30	214A8-12032		SPRING	スプリング	2	
31	01184-12025		BOLT	ボルト	1	
32	01120-08025		BOLT	ボルト	1	[EXD][EXE][EXN][EXH]
33	01400-00008		NUT	ナット	1	[EXD][EXE][EXN][EXH]
34	63110-18901	+	CHART,LOAD	チャート	1	
-	63110-18911	+	CHART,LOAD	チャート	1	[EXA/ENGLISH]
-	514A3-82301	+	CHART,LOAD	チャート	1	[EXB/ENGLISH][EXC/ENGLISH]
-	514A3-82301	+	CHART,LOAD	チャート	1	[EXE/ENGLISH][EXN/ENGLISH]
-	524T3-84031	+	CHART,LOAD	チャート	1	(RUSSIAN)
-	63110-18921	+	CHART,LOAD	チャート	1	(CHINESE)
-	514A3-82321	+	CHART,LOAD	チャート	1	(GERMAN)
-	514A3-82341	+	CHART,LOAD	チャート	1	(FRENCH)
-	514A3-82331	+	CHART,LOAD	チャート	1	(SPANISH)
-	514A3-82361	+	CHART,LOAD	チャート	1	(DANISH)
-	514A3-82381	+	CHART,LOAD	チャート	1	(GREEK)
-	514A3-82371	+	CHART,LOAD	チャート	1	(ITALIAN)
-	514A3-82351	+	CHART,LOAD	チャート	1	(DUTCH)
-	514A3-82391	+	CHART,LOAD	チャート	1	(PORTUGUESE)
35	02432-01008	+	RIVET	リベット	4	
36	63110-19831	+	DECAL	デカル	1	

FIG.34 HINGED FORK [HF21A,HF22A,HF23A]

(A502HF40) ﾋﾝｼﾞﾄﾞﾌｫｰｸ

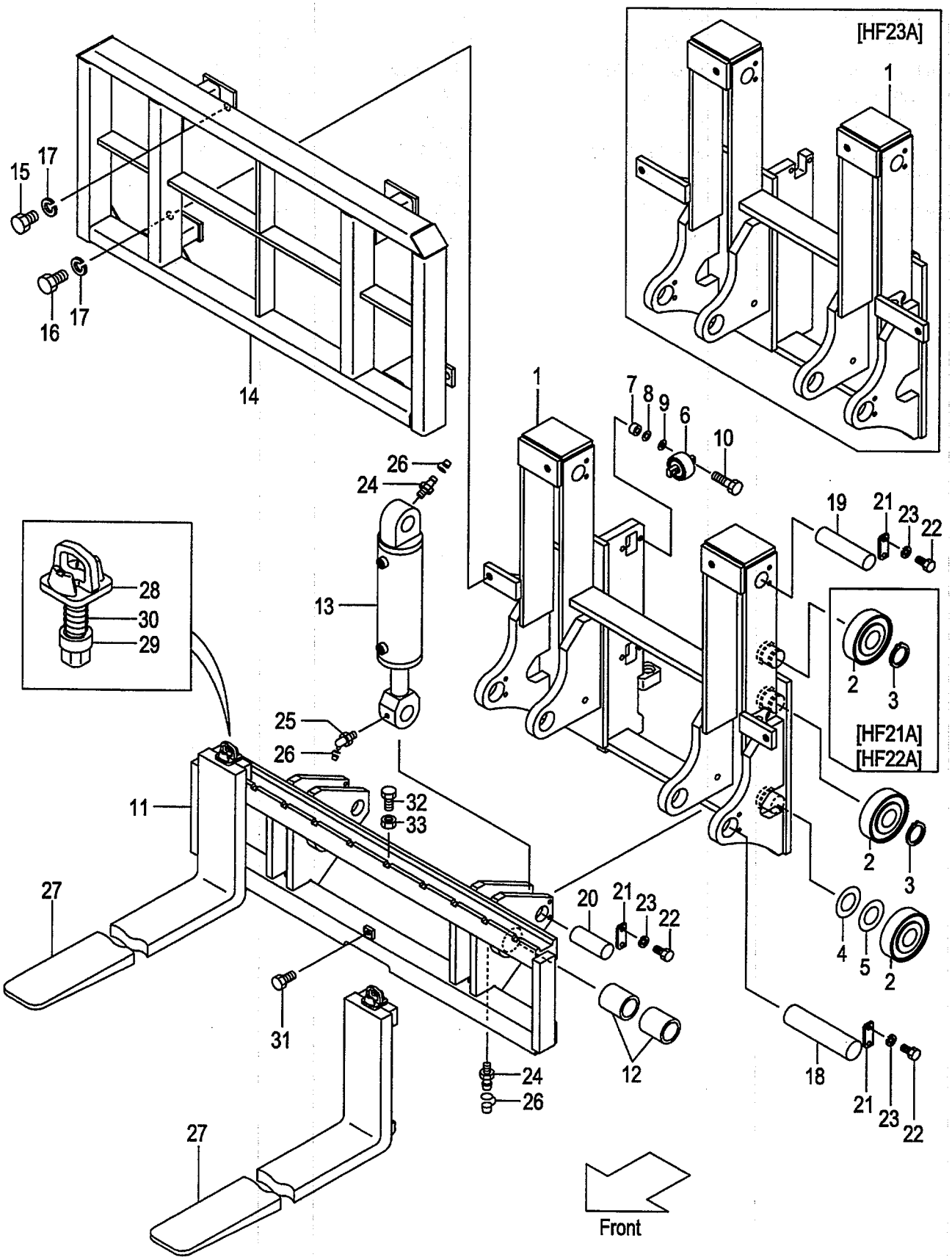

A:HF22A(VM/J)
B:HF21A(VFM/J)
C:HF23A(VFHM/J)

FIG.34
(A502HF40)

Item No	Part No.	Mark	Description		Req'd	Remarks : Serial No.
37	214A7-42181	+	KNOB	ﾉﾌﾞ	1	
38	09210-10300	+	PLATE,NAME	ﾌﾟﾚｰﾄ	1	
-	09210-10300	+	PLATE,NAME	ﾌﾟﾚｰﾄ	1	(ENGLISH)
-	63110-32111	+	PLATE,NAME	ﾌﾟﾚｰﾄ	1	(RUSSIAN)
-	09201-06201	+	PLATE,NAME	ﾌﾟﾚｰﾄ	1	(CHINESE)
-	63110-19211	+	PLATE,NAME	ﾌﾟﾚｰﾄ	1	(GERMAN)
-	63110-19251	+	PLATE,NAME	ﾌﾟﾚｰﾄ	1	(FRENCH)
-	63110-19231	+	PLATE,NAME	ﾌﾟﾚｰﾄ	1	(SPANISH)
-	63110-19291	+	PLATE,NAME	ﾌﾟﾚｰﾄ	1	(DANISH)
-	63110-19331	+	PLATE,NAME	ﾌﾟﾚｰﾄ	1	(GREEK)
-	63110-19311	+	PLATE,NAME	ﾌﾟﾚｰﾄ	1	(ITALIAN)
-	63110-19271	+	PLATE,NAME	ﾌﾟﾚｰﾄ	1	(DUTCH)
-	63110-19351	+	PLATE,NAME	ﾌﾟﾚｰﾄ	1	(PORTUGUESE)
39	62263-47001	+	DECAL,CAUTION	ﾃﾞｶﾙ	1	
40	27419-12072	+	DECAL,CAUTION	ﾃﾞｶﾙ	2	

FIG.35 CYLINDER [HF21A,HF22A,HF23A]

(A502HF50) ｼﾘﾝﾀﾞ

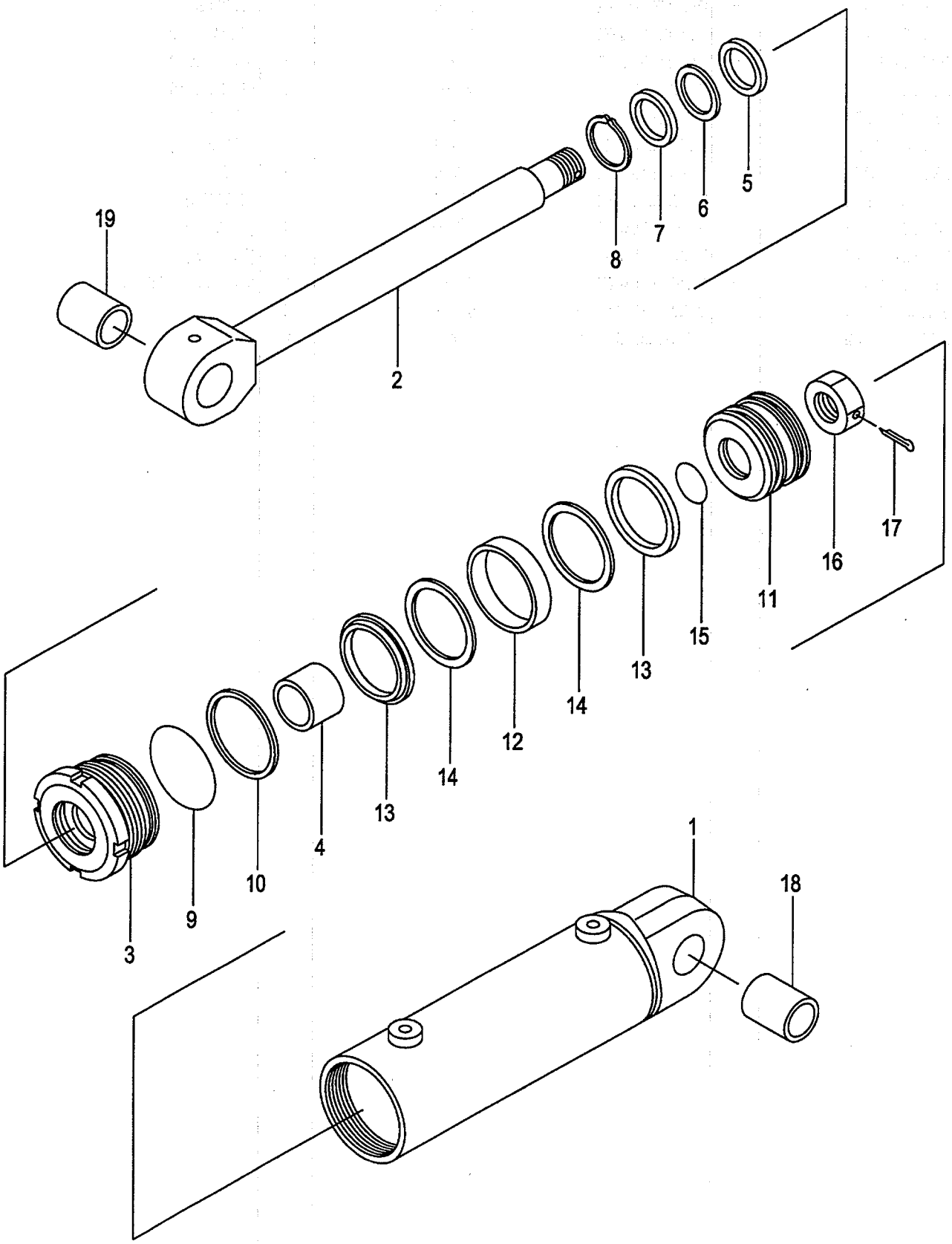

A:HF22A(VM/J)
B:HF21A(VFM/J)
C:HF23A(VFHM/J)

FIG.35
(A502HF50)

Item No	Part No.	Mark	Description		Req'd	Remarks : Serial No.
A1	62263-40901		CYL-ASSY	ｼﾘﾝﾀﾞｱｯｾﾝ	2	INC.1-19
-	62263-40911		CYL-ASSY	ｼﾘﾝﾀﾞｱｯｾﾝ	2	[FC] INC.1-19
1	62253-40921		TUBE	ﾁｭｰﾌﾞ	2	
2	62263-40961		ROD,PISTON	ﾛｯﾄﾞ	2	
-	62263-40971		ROD,PISTON	ﾛｯﾄﾞ	2	[FC]
3	62243-42532		CAP	ｷｬｯﾌﾟ	2	
4	22198-42611		BUSH	ﾌﾞｯｼﾝｸﾞ	2	
5	22438-52101	*	PACKING	ﾊﾟｯｷﾝｸﾞ	2	
6	22438-52111	*	RING,BACK-UP	ﾘﾝｸﾞ	2	
7	24320-56871	*	SEAL,DUST	ｼｰﾙ	2	
8	22678-52101	*	RING,SNAP	ｽﾅｯﾌﾟﾘﾝｸﾞ	2	
9	03350-00850	*	O-RING	Oﾘﾝｸﾞ	2	
10	03370-00850	*	RING,BACK-UP	ﾘﾝｸﾞ	2	
11	62253-42261		PISTON	ﾋﾟｽﾄﾝ	2	
12	24608-52401	*	WEARING	ｳｴｱﾘﾝｸﾞ	2	
13	25808-43111	*	PACKING	ﾊﾟｯｷﾝｸﾞ	4	
14	25808-43121	*	RING,BACK-UP	ﾘﾝｸﾞ	4	
15	03320-00400		O-RING	Oﾘﾝｸﾞ	2	
16	63626-23051		NUT	ﾅｯﾄ	2	
17	02200-06060		PIN,COTTER	ﾋﾟﾝ	2	
18	62243-42821		BUSH	ﾌﾞｯｼﾝｸﾞ	2	
19	63173-42821		BUSH	ﾌﾞｯｼﾝｸﾞ	2	
K1	25818-99802		KIT,OVERHAUL	ｵｰﾊﾞｰﾎｰﾙｷｯﾄ	2	INC.5-10,12-14
K2	22438-59821		KIT,PACKING	ﾊﾟｯｷﾝｸﾞｷｯﾄ	2	INC.5,6

FIG.36 HYDRAULIC LINE (CONNECTOR-CYLINDER)

(A502HF60) ﾊｲﾄﾞﾛﾘｯｸﾗｲﾝ (ｺﾈｸﾀｰｼﾘﾝﾀﾞｰ)

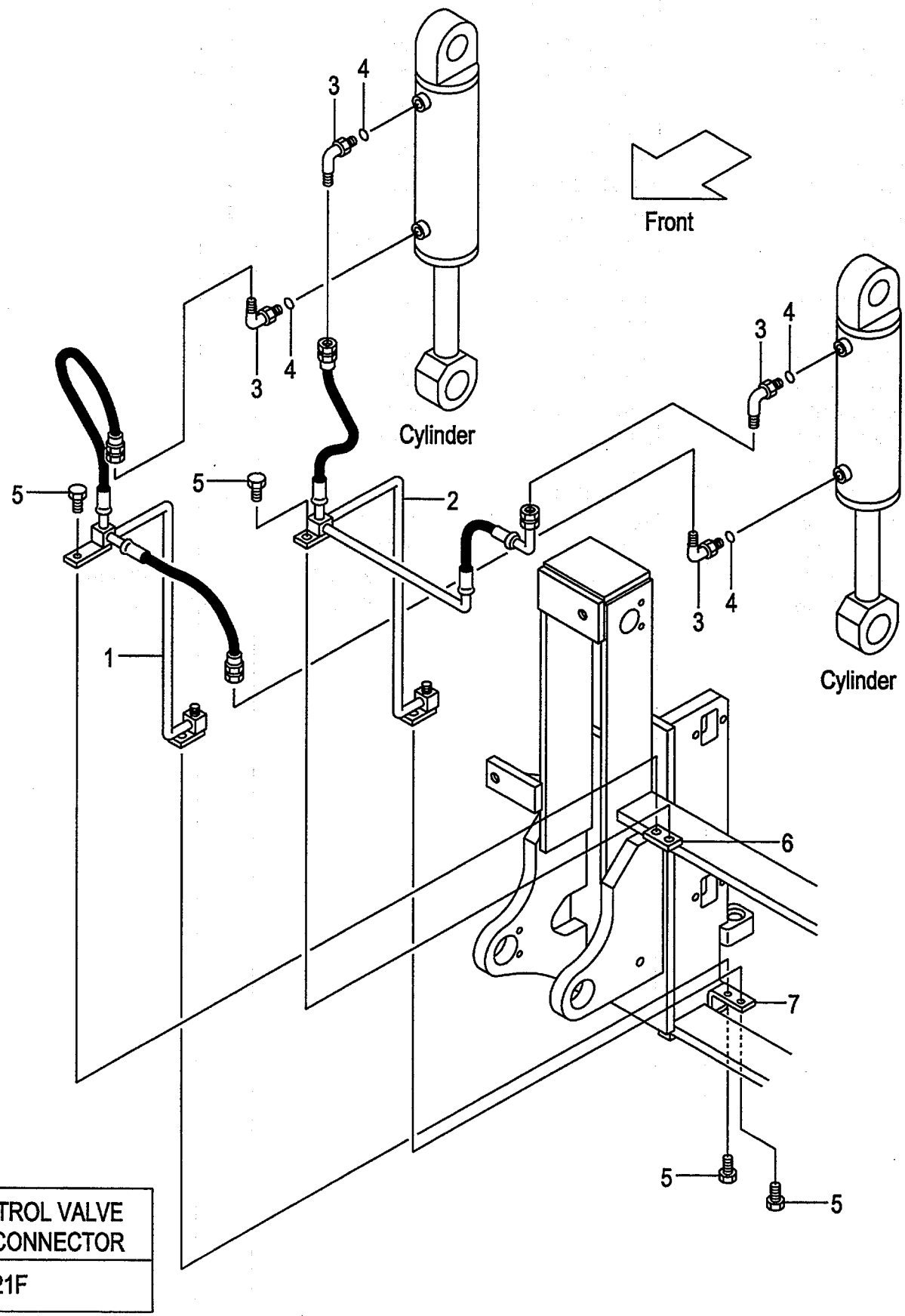

CONTROL VALVE -CONNECTOR
AP021F

FIG.36
(A502HF60)

A:HF22A(VM/J)

Item No	Part No.	Mark	Description		Req'd	Remarks : Serial No.
1	622A3-42401		PIPE	ﾊﾟｲﾌﾟ	1	
2	622A3-42411		PIPE	ﾊﾟｲﾌﾟ	1	
3	04150-00303		ELBOW	ｴﾙﾎﾞ	4	
4	03320-00140		O-RING	Oﾘﾝｸﾞ	4	
5	01184-10020		BOLT	ﾎﾞﾙﾄ	4	
6	62253-42511		PLATE	ﾌﾟﾚｰﾄ	1	
7	622A3-42501		PLATE	ﾌﾟﾚｰﾄ	1	

FIG.37 HYDRAULIC LINE (CONNECTOR-CYLINDER)[VFM,VFHM]

(A502HF70) ﾊｲﾄﾞﾛﾘｯｸﾗｲﾝ (ｺﾈｸﾀｰｼﾘﾝﾀﾞｰ)

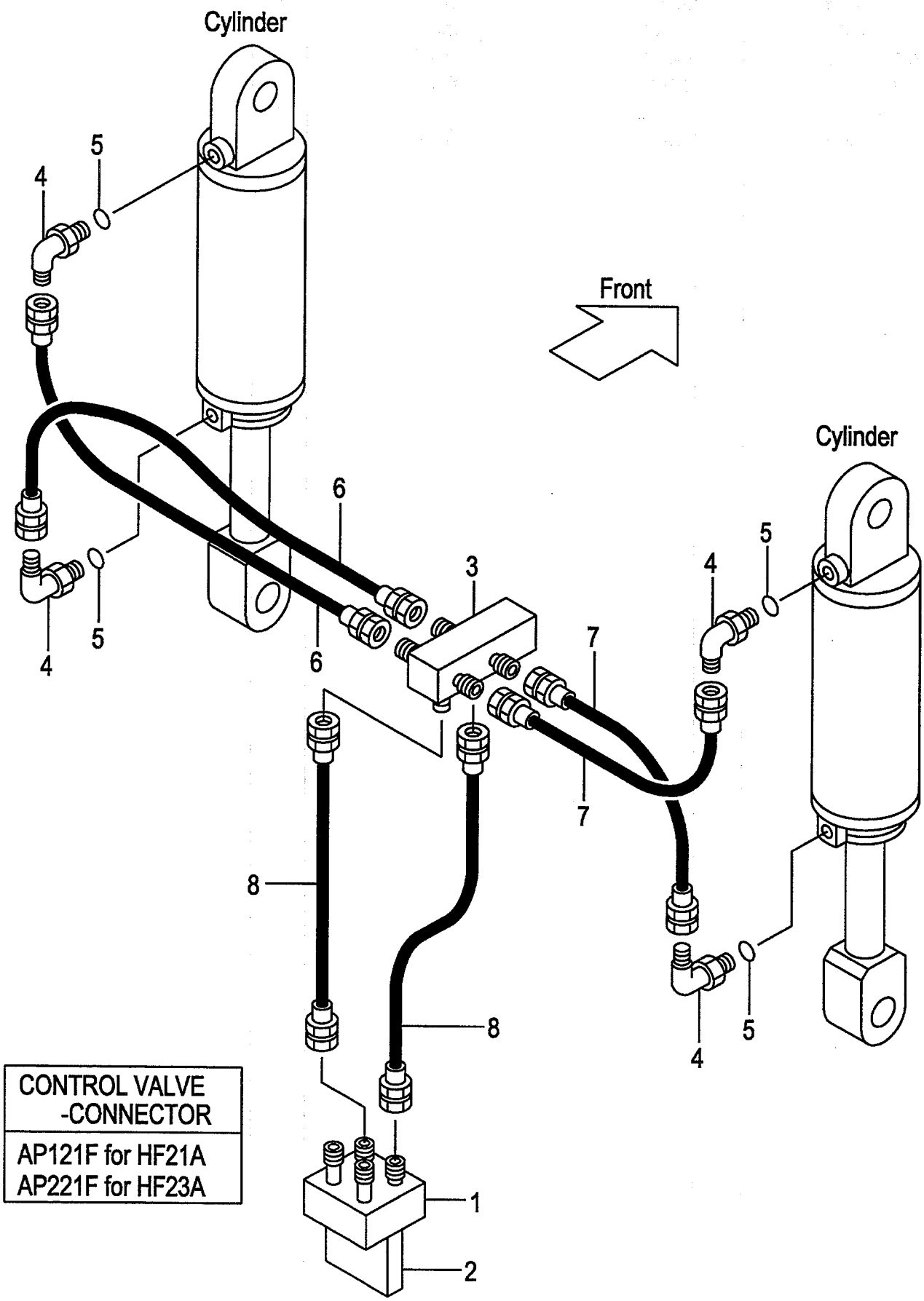

A:HF21A(VFM/J)
B:HF23A(VFHM/J)

FIG.37
(A502HF70)

Item No	Part No.	Mark	Description		Req'd	Remarks : Serial No.
1	62170-12571		STUD	ｽﾀｯﾄﾞ	1	
2	61150-12511		PLATE	ﾌﾟﾚｰﾄ	1	
3	63110-18841		STUD	ｽﾀｯﾄﾞ	1	
4	04150-00303		ELBOW	ｴﾙﾎﾞ	4	
5	03320-00140		O-RING	Oﾘﾝｸﾞ	4	
6	63130-21050		HOSE	ﾎｰｽ	2	
7	63130-21045		HOSE	ﾎｰｽ	2	A
-	63130-21040		HOSE	ﾎｰｽ	2	B
8	63130-21030		HOSE	ﾎｰｽ	2	

FIG.38 HINGED FORK [HF27A]

(A503HF10) ﾋﾝｼﾞﾄﾞﾌｫｰｸ

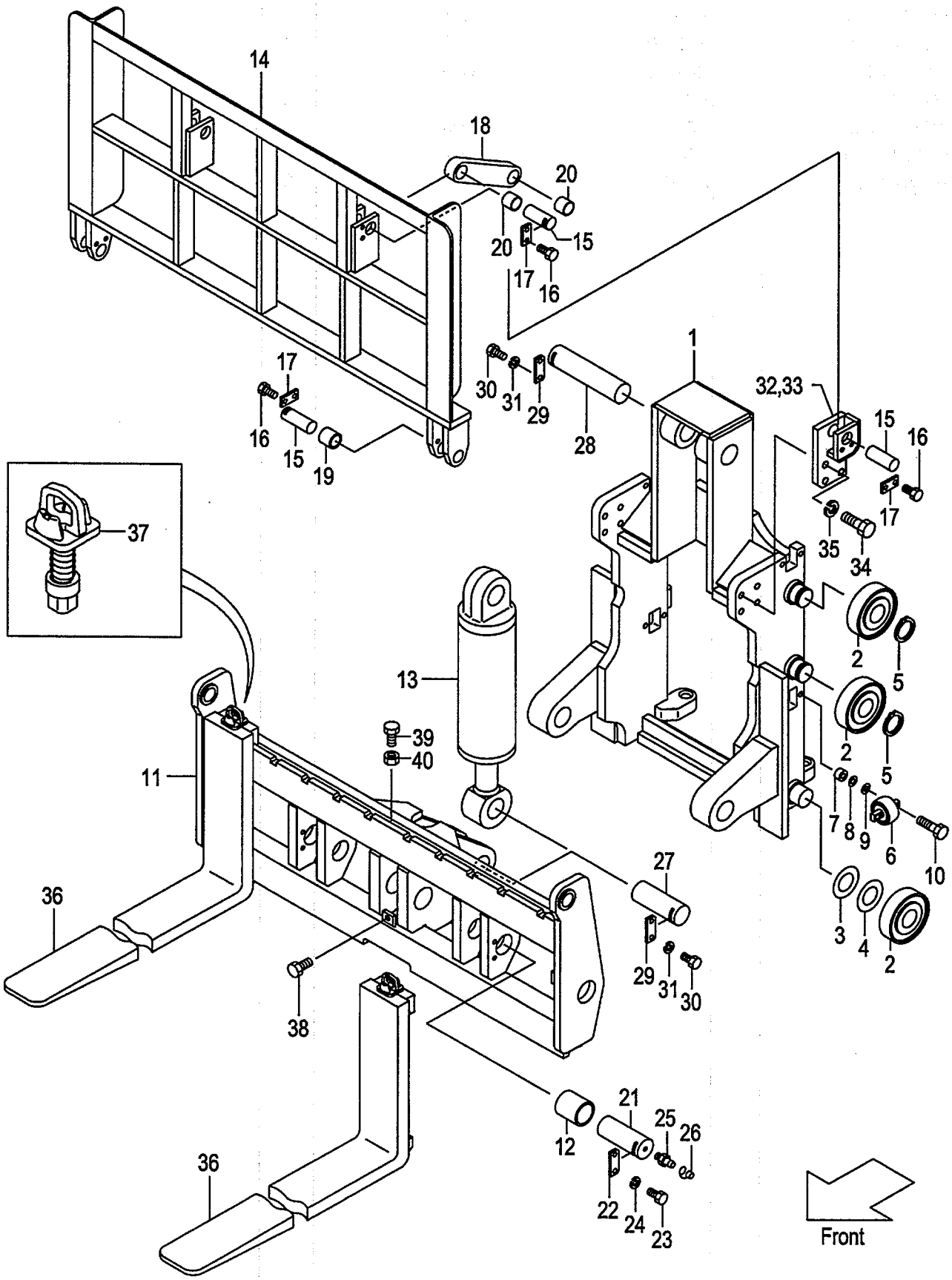

A:HF27A(VM/J)

Item No	Part No.	Mark	Description		Req'd	Remarks : Serial No.
A1	627A3-40001		FORK-ASSY,HINGED	ﾋﾝｼﾞﾄﾞﾌｫｰｸｱｯｾﾝ	1	INC.1-35
-	627A3-40011		FORK-ASSY,HINGED	ﾋﾝｼﾞﾄﾞﾌｫｰｸｱｯｾﾝ	1	[WFH] INC.1-35
-	627A3-40021		FORK-ASSY,HINGED	ﾋﾝｼﾞﾄﾞﾌｫｰｸｱｯｾﾝ	1	[FC] INC.1-35
-	627A3-40031		FORK-ASSY,HINGED	ﾋﾝｼﾞﾄﾞﾌｫｰｸｱｯｾﾝ	1	[FC/WFH] INC.1-35
1	627A3-40101		BRACKET	ﾌﾞﾗｹｯﾄ	1	
2	277P8-22051		ROLLER,END	ﾛｰﾗ	6	
-	577P3-74001		ROLLER,END	ﾛｰﾗ	6	[FC]
-	277P8-22061		ROLLER,END	ﾛｰﾗ	(4)	
-	577P3-74011		ROLLER,END	ﾛｰﾗ	(4)	[FC]
3	277P8-22071		SHIM	ｼﾑ	10	
4	277P8-22081		SHIM	ｼﾑ	10	
5	02100-00045		RING,SNAP	ｽﾅｯﾌﾟﾘﾝｸﾞ	4	
6	23458-32052		ROLLER,SIDE	ﾛｰﾗ	4	
-	514A3-71702		ROLLER,SIDE	ﾛｰﾗ	4	[FC]
7	22548-34031		SPACER	ｽﾍﾟｰｻ	8	
8	22548-34051		SHIM	ｼﾑ	10	
9	22548-34061		SHIM	ｼﾑ	10	
10	01184-12050		BOLT & WASHER	ﾎﾞﾙﾄ&ﾜｯｼｬ	8	
11	62773-40111		BAR,FINGER	ﾊﾞｰ	1	
-	62773-40121		BAR,FINGER	ﾊﾞｰ	1	[WFH]
12	24388-52031		BUSHING	ﾌﾞｯｼﾝｸﾞ	2	
13	62763-40702		CYL	ｼﾘﾝﾀﾞ	1	SEE FIG.39
-	62763-40732		CYL	ｼﾘﾝﾀﾞ	1	[FC]SEE FIG.39
14	62773-40501		REST,BACK	ﾊﾞｯｸﾚｽﾄ	1	
-	62773-40601		REST,BACK	ﾊﾞｯｸﾚｽﾄ	1	[WFH]
15	62453-42711		PIN	ﾋﾟﾝ	6	
16	01184-10016		BOLT	ﾎﾞﾙﾄ	12	
17	23648-50161		PLATE	ﾌﾟﾚｰﾄ	6	
18	62453-42701		LINK	ﾘﾝｸ	2	
19	24238-52051		BUSHING	ﾌﾞｯｼﾝｸﾞ	2	
20	27718-22491		BUSHING	ﾌﾞｯｼﾝｸﾞ	4	
21	62433-42701		PIN	ﾋﾟﾝ	2	
22	25176-12361		PLATE	ﾌﾟﾚｰﾄ	2	
23	01103-10020		BOLT	ﾎﾞﾙﾄ	4	
24	02010-00010		WASHER	ﾜｯｼｬ	4	
25	04901-00100		FITTING	ﾌｨｯﾃｨﾝｸﾞ	4	
26	22199-12401		CAP	ｷｬｯﾌﾟ	4	
27	63633-42321		PIN	ﾋﾟﾝ	1	
28	62263-42721		PIN	ﾋﾟﾝ	1	
29	25176-12361		PLATE	ﾌﾟﾚｰﾄ	2	
30	01103-10020		BOLT	ﾎﾞﾙﾄ	4	
31	02010-00010		WASHER	ﾜｯｼｬ	4	
32	62453-42652		BRACKET,LH	ﾌﾞﾗｹｯﾄ	1	
33	62453-42662		BRACKET,RH	ﾌﾞﾗｹｯﾄ	1	
34	01100-14040		BOLT	ﾎﾞﾙﾄ	8	
35	02011-00014		WASHER	ﾜｯｼｬ	8	
36	63153-40613		FORK	ﾌｫｰｸ	2	(L=1070)
-	63153-40623		FORK	ﾌｫｰｸ	2	[LFH122]
-	63153-40633		FORK	ﾌｫｰｸ	2	[LFH137]
-	63153-40643		FORK	ﾌｫｰｸ	2	[LFH152]

FIG.38 HINGED FORK [HF27A]

(A503HF10) ﾋﾝｼﾞﾄﾞﾌｫｰｸ

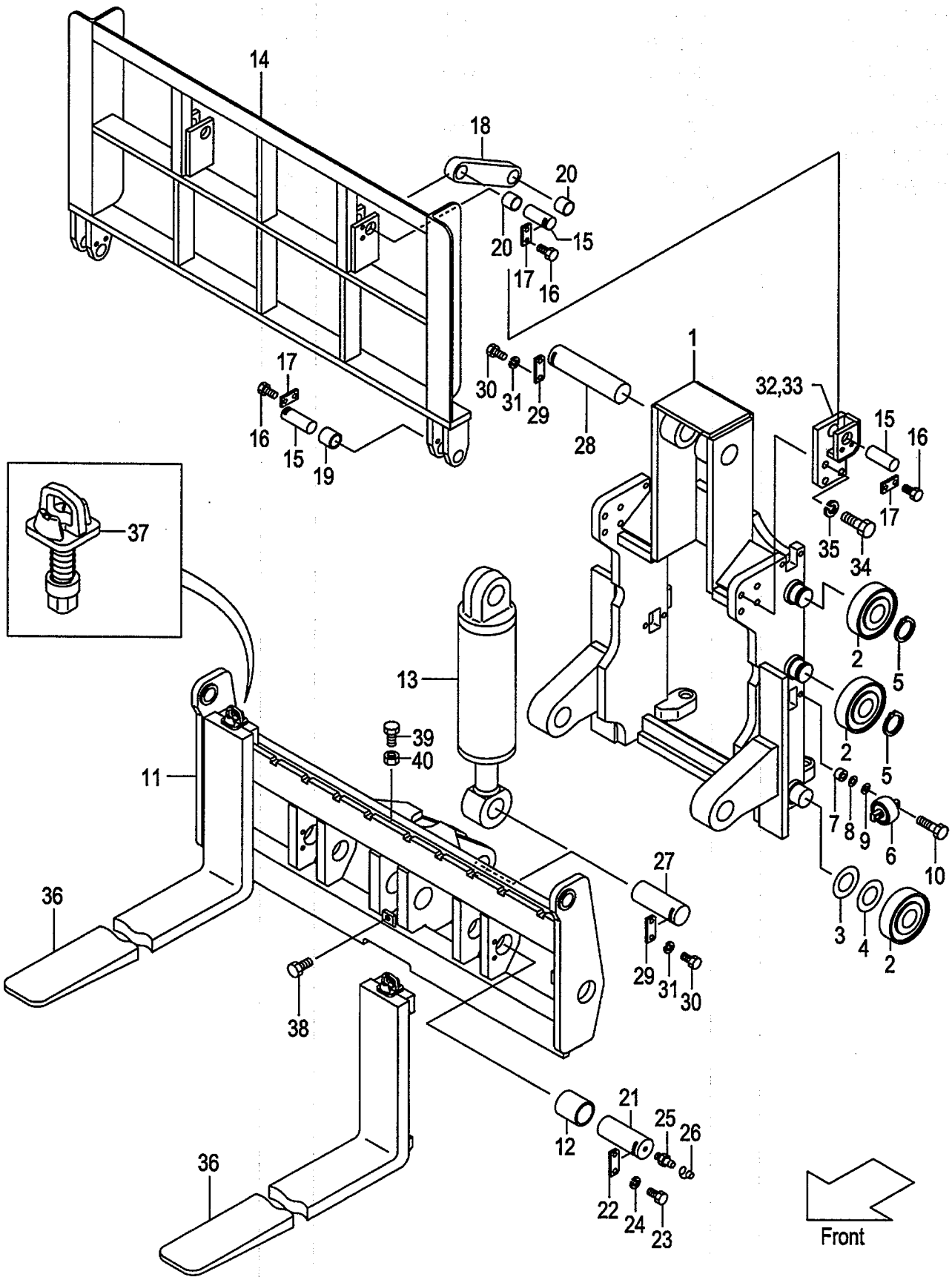

A:HF27A(VM/J)

Item No	Part No.	Mark	Description		Req'd	Remarks : Serial No.
-	63153-40653		FORK	ﾌｫｰｸ	2	[LFH167]
-	63153-40663		FORK	ﾌｫｰｸ	2	[LFH182]
37	214J8-11002		STOPPER,FORK	ｽﾄｯﾊﾟ	2	
38	01184-12025		BOLT	ﾎﾞﾙﾄ	1	
39	01120-08025		BOLT	ﾎﾞﾙﾄ	1	[EXD][EXE][EXN][EXH]
40	01400-00008		NUT	ﾅｯﾄ	1	[EXD][EXE][EXN][EXH]
41	63110-18901	+	CHART,LOAD	ﾁｬｰﾄ	1	
-	63110-18911	+	CHART,LOAD	ﾁｬｰﾄ	1	[EXA/ENGLISH]
-	514A3-82301	+	CHART,LOAD	ﾁｬｰﾄ	1	[(EXB,EXC,EXE,EXN)/ENGLISH]
-	524T3-84031	+	CHART,LOAD	ﾁｬｰﾄ	1	(RUSSIAN)
-	63110-18921	+	CHART,LOAD	ﾁｬｰﾄ	1	(CHINESE)
-	514A3-82321	+	CHART,LOAD	ﾁｬｰﾄ	1	(GERMAN)
-	514A3-82341	+	CHART,LOAD	ﾁｬｰﾄ	1	(FRENCH)
-	514A3-82331	+	CHART,LOAD	ﾁｬｰﾄ	1	(SPANISH)
-	514A3-82361	+	CHART,LOAD	ﾁｬｰﾄ	1	(DANISH)
-	514A3-82381	+	CHART,LOAD	ﾁｬｰﾄ	1	(GREEK)
-	514A3-82371	+	CHART,LOAD	ﾁｬｰﾄ	1	(ITALIAN)
-	514A3-82351	+	CHART,LOAD	ﾁｬｰﾄ	1	(DUTCH)
-	514A3-82391	+	CHART,LOAD	ﾁｬｰﾄ	1	(PORTUGUESE)
42	02432-01008	+	RIVET	ﾘﾍﾞｯﾄ	4	
43	63110-19831	+	DECAL	ﾃﾞｶﾙ	1	
44	214A7-42181	+	KNOB	ﾉﾌﾞ	1	
45	09210-10300	+	PLATE,NAME	ﾌﾟﾚｰﾄ	1	
-	09210-10300	+	PLATE,NAME	ﾌﾟﾚｰﾄ	1	(ENGLISH)
-	63110-32111	+	PLATE,NAME	ﾌﾟﾚｰﾄ	1	(RUSSIAN)
-	09201-06201	+	PLATE,NAME	ﾌﾟﾚｰﾄ	1	(CHINESE)
-	63110-19211	+	PLATE,NAME	ﾌﾟﾚｰﾄ	1	(GERMAN)
-	63110-19251	+	PLATE,NAME	ﾌﾟﾚｰﾄ	1	(FRENCH)
-	63110-19231	+	PLATE,NAME	ﾌﾟﾚｰﾄ	1	(SPANISH)
-	63110-19291	+	PLATE,NAME	ﾌﾟﾚｰﾄ	1	(DANISH)
-	63110-19331	+	PLATE,NAME	ﾌﾟﾚｰﾄ	1	(GREEK)
-	63110-19311	+	PLATE,NAME	ﾌﾟﾚｰﾄ	1	(ITALIAN)
-	63110-19271	+	PLATE,NAME	ﾌﾟﾚｰﾄ	1	(DUTCH)
-	63110-19351	+	PLATE,NAME	ﾌﾟﾚｰﾄ	1	(PORTUGUESE)
46	62263-47001	+	DECAL,CAUTION	ﾃﾞｶﾙ	1	
47	27419-12072	+	DECAL,CAUTION	ﾃﾞｶﾙ	2	

FIG.39 CYLINDER [HF27A]

(A503HF20) ｼﾘﾝﾀﾞ

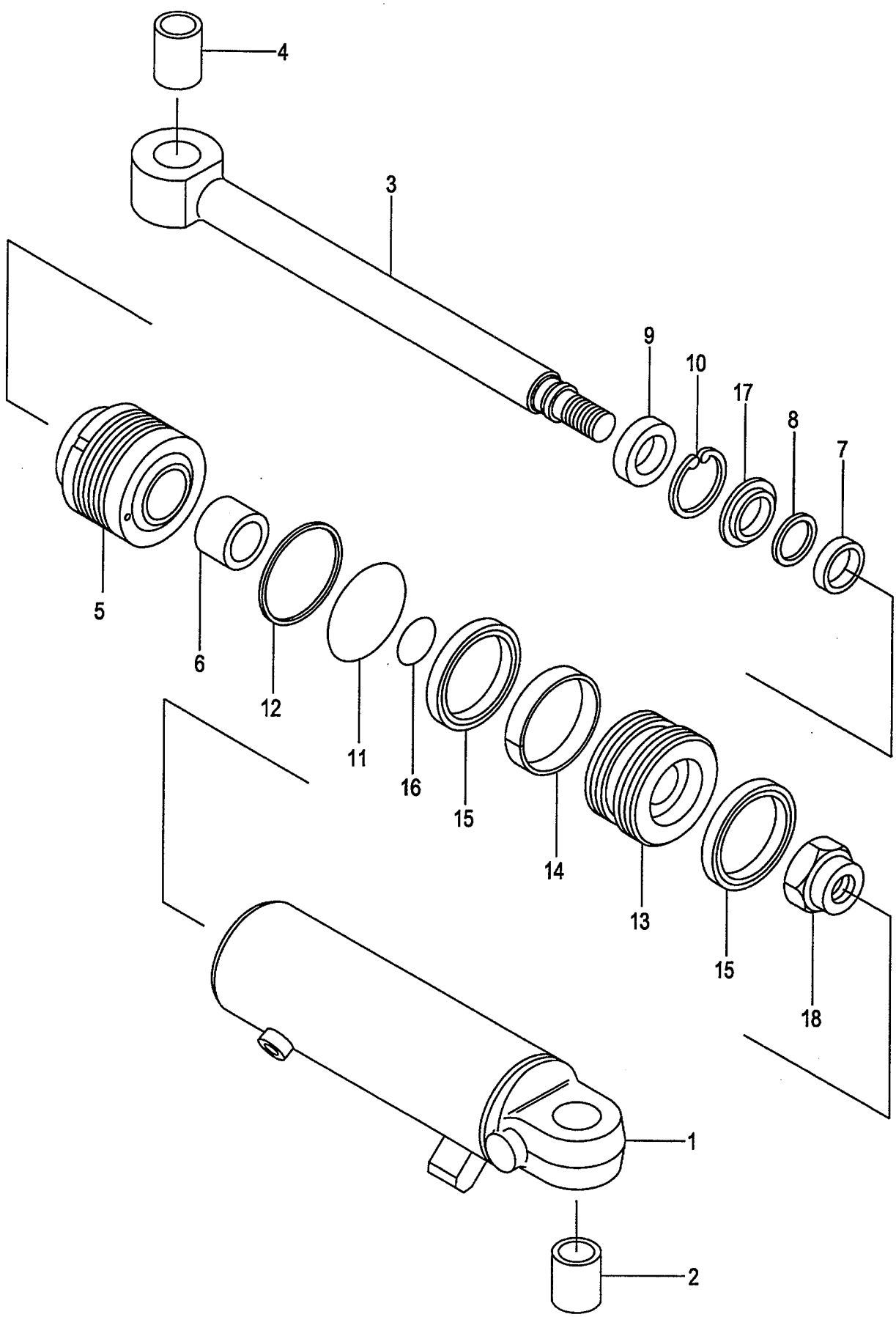

A:HF27A(VM/J)

Item No	Part No.	Mark	Description		Req'd	Remarks : Serial No.
A1	62763-40702		CYL-ASSY	ｼﾘﾝﾀﾞｱｯｾﾝ	1	INC.1-18
-	62763-40732		CYL-ASSY	ｼﾘﾝﾀﾞｱｯｾﾝ	1	[FC] INC.1-18
1	62763-40712		TUBE	ﾁｭｰﾌﾞ	1	INC.2
2	23816-10561		BUSHING	ﾌﾞｯｼﾝｸﾞ	1	
3	62763-40722		ROD,PISTON	ﾛｯﾄﾞ	1	INC.4
-	62763-40742		ROD,PISTON	ﾛｯﾄﾞ	1	[FC] INC.4
4	25178-52041		BUSHING	ﾌﾞｯｼﾝｸﾞ	1	
5	25788-52052		CAP	ｷｬｯﾌﾟ	1	
6	23460-53171		BUSH	ﾌﾞｯｼﾝｸﾞ	1	
7	24328-52201		PACKING	ﾊﾟｯｷﾝｸﾞ	1	
8	24328-52211		RING,BACK-UP	ﾘﾝｸﾞ	1	
9	224T8-46001		SEAL	ｼｰﾙ	1	
10	02110-00072		RING,SNAP	ｽﾅｯﾌﾟﾘﾝｸﾞ	1	
11	03350-01100		O-RING	Oﾘﾝｸﾞ	1	
12	24388-52061		RING,BACK-UP	ﾘﾝｸﾞ	1	
13	62453-42631		PISTON	ﾋﾟｽﾄﾝ	1	
14	22658-52081		WEARING	ｳｴｱﾘﾝｸﾞ	1	
15	25788-52151		PACKING	ﾊﾟｯｷﾝｸﾞ	2	
16	03350-00350		O-RING	Oﾘﾝｸﾞ	1	
17	24328-52221		RETAINER	ﾘﾃｰﾅ	1	
18	25818-52081		NUT	ﾅｯﾄ	1	

FIG.40 HYDRAULIC LINE (CONNECTOR-CYLINDER)

(A503HF30) ﾊｲﾄﾞﾛﾘｯｸﾗｲﾝ (ｺﾈｸﾀｰｼﾘﾝﾀﾞ)

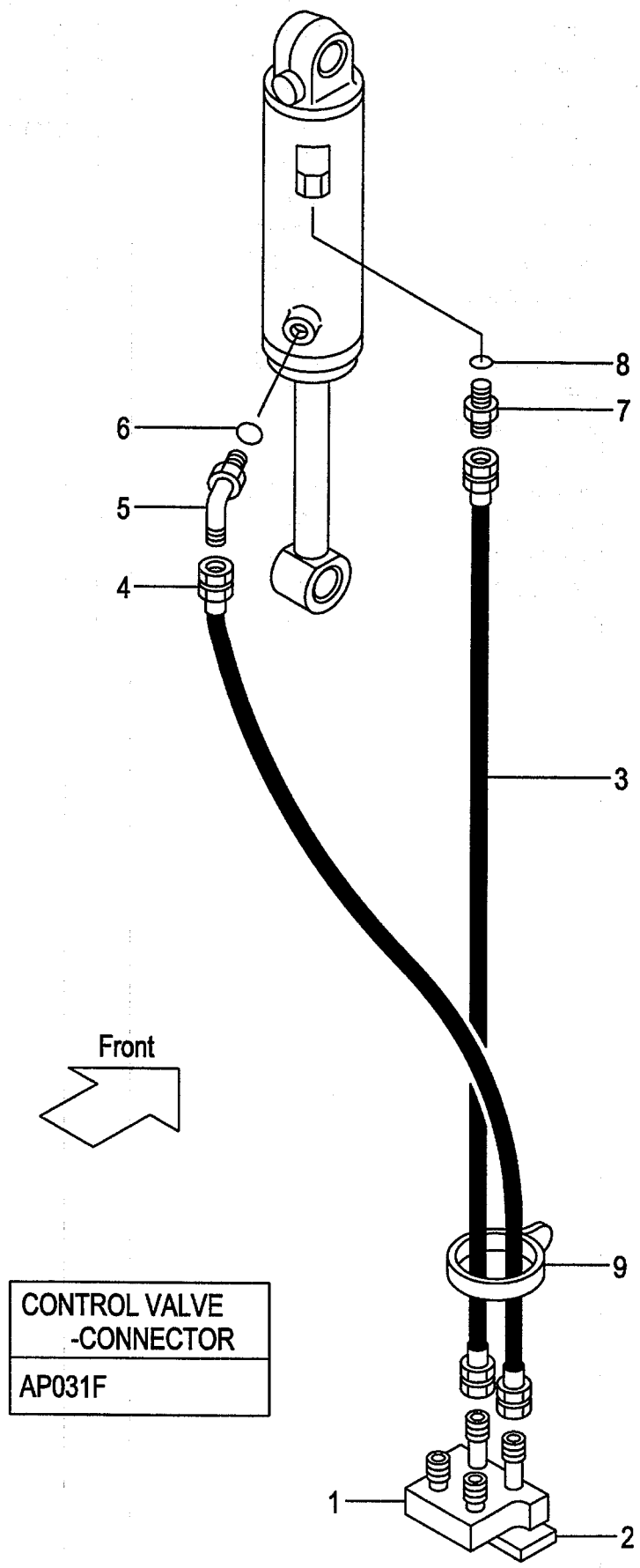

A:HF27A(VM/J)

Item No	Part No.	Mark	Description		Req'd	Remarks : Serial No.
1	63110-14661		STUD	ｽﾀｯﾄﾞ	1	
2	624A3-42501		PLATE	ﾌﾟﾚｰﾄ	1	
3	63130-21070		HOSE	ﾎｰｽ	1	
4	63130-21035		HOSE	ﾎｰｽ	1	
A1	04150-20303		ELBOW-ASSY	ｴﾙﾎﾞｱｯｾﾝ	1	INC.5,6
5	04150-00303		ELBOW	ｴﾙﾎﾞ	1	
6	03320-00140		O-RING	Oﾘﾝｸﾞ	1	
A2	04134-20303		NIPPLE-ASSY	ﾆｯﾌﾟﾙｱｯｾﾝ	1	INC.7,8
7	04134-00303		NIPPLE	ﾆｯﾌﾟﾙ	1	
8	03320-00140		O-RING	Oﾘﾝｸﾞ	1	
9	27262-42091		BAND	ﾊﾞﾝﾄﾞ	1	

FIG.41 HINGED FORK [HF31A]

(A503HF40) ﾋﾝｼﾞﾄﾞﾌｫｰｸ

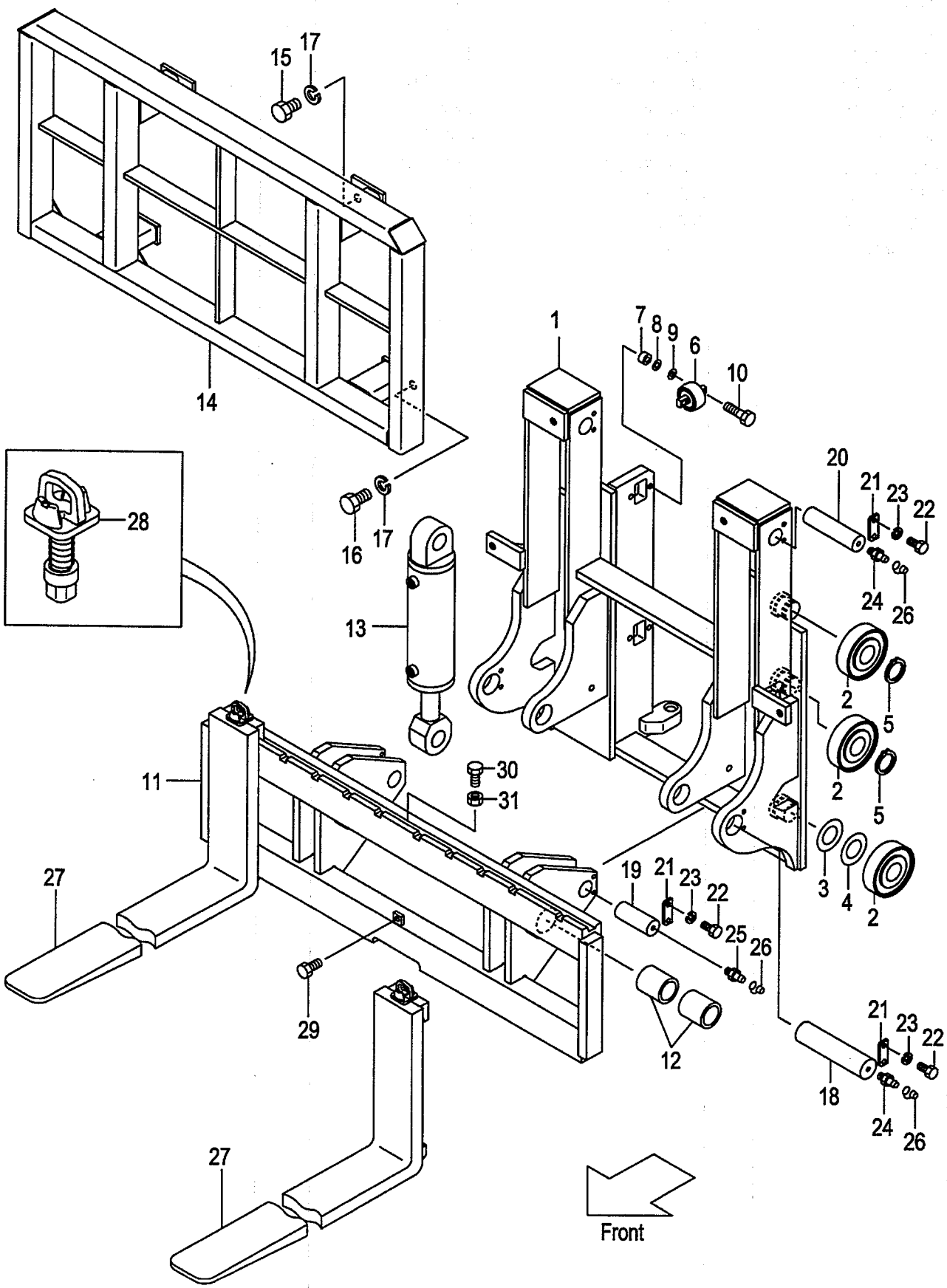

A:HF31A(VM/J)

Item No	Part No.	Mark	Description		Req'd	Remarks : Serial No.
A1	631A3-40001		FORK-ASSY,HINGED	ﾋﾝｼﾞﾄﾞﾌｫｰｸｱｯｾﾝ	1	INC.1-26
-	631A3-40011		FORK-ASSY,HINGED	ﾋﾝｼﾞﾄﾞﾌｫｰｸｱｯｾﾝ	1	[WFH] INC.1-26
-	631A3-40021		FORK-ASSY,HINGED	ﾋﾝｼﾞﾄﾞﾌｫｰｸｱｯｾﾝ	1	[FC] INC.1-26
-	631A3-40031		FORK-ASSY,HINGED	ﾋﾝｼﾞﾄﾞﾌｫｰｸｱｯｾﾝ	1	[FC/WFH] INC.1-26
1	631A3-40101		BRACKET	ﾌﾞﾗｹｯﾄ	1	
2	277P8-22051		ROLLER,END	ﾛｰﾗ	6	
-	577P3-74001		ROLLER,END	ﾛｰﾗ	6	[FC]
-	277P8-22061		ROLLER,END	ﾛｰﾗ	(4)	
-	577P3-74011		ROLLER,END	ﾛｰﾗ	(4)	[FC]
3	277P8-22071		SHIM	ｼﾑ	10	
4	277P8-22081		SHIM	ｼﾑ	10	
5	02100-00045		RING,SNAP	ｽﾅｯﾌﾟﾘﾝｸﾞ	4	
6	23458-32052		ROLLER,SIDE	ﾛｰﾗ	4	
-	514A3-71702		ROLLER,SIDE	ﾛｰﾗ	4	[FC]
7	22548-34031		SPACER	ｽﾍﾟｰｻ	8	
8	22548-34051		SHIM	ｼﾑ	10	
9	22548-34061		SHIM	ｼﾑ	10	
10	01184-12050		BOLT & WASHER	ﾎﾞﾙﾄ&ﾜｯｼｬ	8	
11	63183-40201		BAR,FINGER	ﾊﾞｰ	1	
-	63183-40301		BAR,FINGER	ﾊﾞｰ	1	[WFH]
12	25178-52041		BUSHING	ﾌﾞｯｼﾝｸﾞ	4	
13	63173-40901		CYL	ｼﾘﾝﾀﾞ	2	SEE FIG.42
-	63173-40911		CYL	ｼﾘﾝﾀﾞ	2	[FC]SEE FIG.42
14	63183-40501		REST,BACK	ﾊﾞｯｸﾚｽﾄ	1	
-	63183-40601		REST,BACK	ﾊﾞｯｸﾚｽﾄ	1	[WFH]
15	01103-16025		BOLT	ﾎﾞﾙﾄ	2	
16	01103-16030		BOLT	ﾎﾞﾙﾄ	2	
17	02011-00016		WASHER	ﾜｯｼｬ	4	
18	62263-42721		PIN	ﾋﾟﾝ	2	
19	63173-42721		PIN	ﾋﾟﾝ	2	
20	62243-42621		PIN	ﾋﾟﾝ	2	
21	25176-12361		PLATE	ﾌﾟﾚｰﾄ	6	
22	01103-10020		BOLT	ﾎﾞﾙﾄ	12	
23	02010-00010		WASHER	ﾜｯｼｬ	12	
24	04901-00100		FITTING	ﾌｨｯﾃｨﾝｸﾞ	4	
25	04901-00160		FITTING	ﾌｨｯﾃｨﾝｸﾞ	2	
26	22199-12401		CAP	ｷｬｯﾌﾟ	6	
27	63153-40613		FORK	ﾌｫｰｸ	2	(L=1070)
-	63153-40613		FORK	ﾌｫｰｸ	2	[LFH107]
-	63153-40623		FORK	ﾌｫｰｸ	2	[LFH122]
-	63153-40633		FORK	ﾌｫｰｸ	2	[LFH137]
-	63153-40643		FORK	ﾌｫｰｸ	2	[LFH152]
-	63153-40653		FORK	ﾌｫｰｸ	2	[LFH167]
-	63153-40663		FORK	ﾌｫｰｸ	2	[LFH182]
28	214J8-11002		STOPPER,FORK	ｽﾄｯﾊﾟ	2	
29	01184-12025		BOLT	ﾎﾞﾙﾄ	1	
30	01120-08025		BOLT	ﾎﾞﾙﾄ	1	[EXD][EXE][EXN][EXH]
31	01400-00008		NUT	ﾅｯﾄ	1	[EXD][EXE][EXN][EXH]
32	63110-18901	+	CHART,LOAD	ﾁｬｰﾄ	1	
-	63110-18911	+	CHART,LOAD	ﾁｬｰﾄ	1	[EXA/ENGLISH]

FIG.41 HINGED FORK [HF31A]

(A503HF40) ﾋﾝｼﾞﾄﾞﾌｫｰｸ

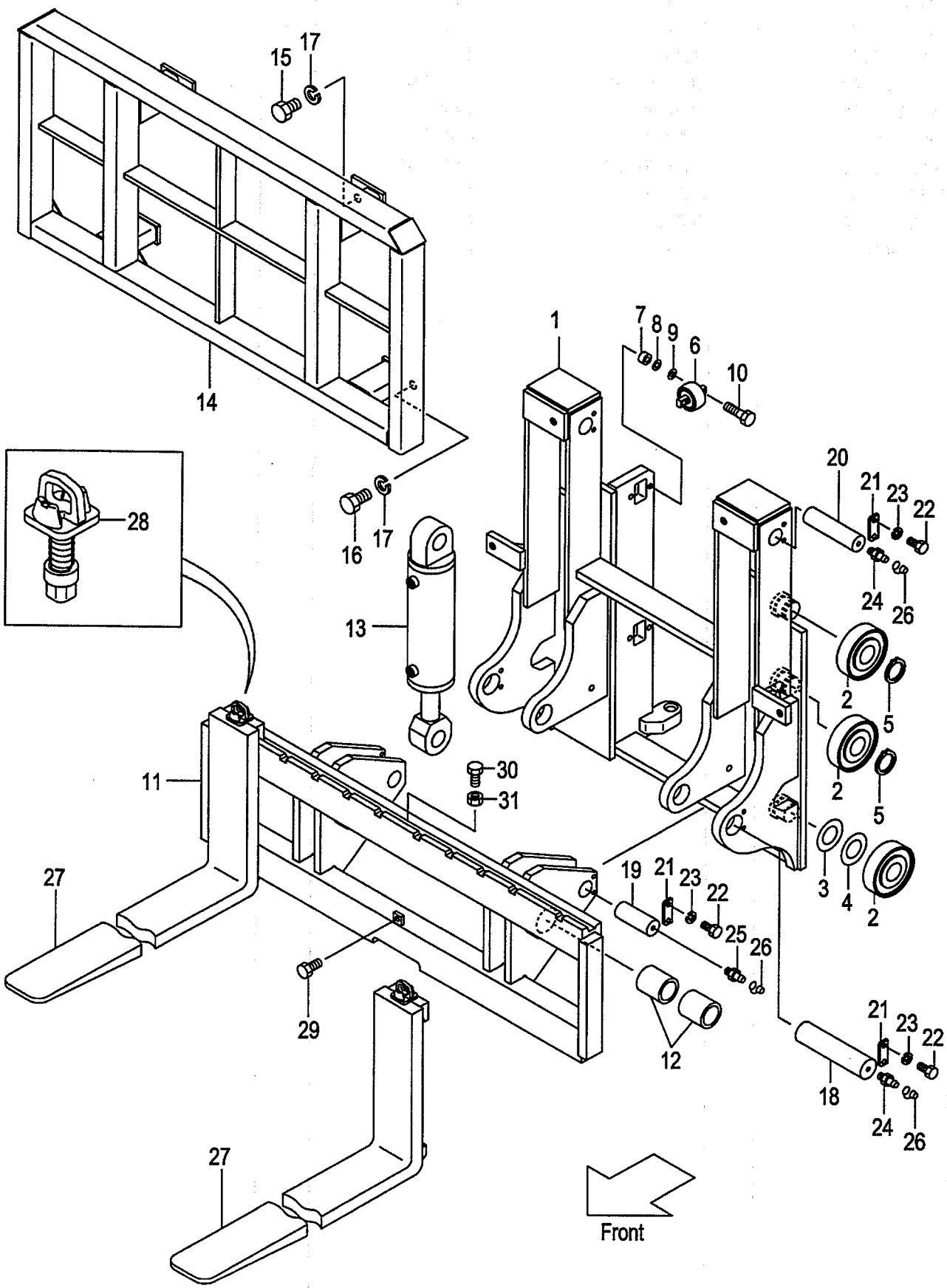

A:HF31A(VM/J)

Item No	Part No.	Mark	Description		Req'd	Remarks : Serial No.
-	514A3-82301	+	CHART,LOAD	ﾁｬｰﾄ	1	[(EXB,EXC,EXE,EXN)/ENGLISH]
-	524T3-84031	+	CHART,LOAD	ﾁｬｰﾄ	1	(RUSSIAN)
-	63110-18921	+	CHART,LOAD	ﾁｬｰﾄ	1	(CHINESE)
-	514A3-82321	+	CHART,LOAD	ﾁｬｰﾄ	1	(GERMAN)
-	514A3-82341	+	CHART,LOAD	ﾁｬｰﾄ	1	(FRENCH)
-	514A3-82331	+	CHART,LOAD	ﾁｬｰﾄ	1	(SPANISH)
-	514A3-82361	+	CHART,LOAD	ﾁｬｰﾄ	1	(DANISH)
-	514A3-82381	+	CHART,LOAD	ﾁｬｰﾄ	1	(GREEK)
-	514A3-82371	+	CHART,LOAD	ﾁｬｰﾄ	1	(ITALIAN)
-	514A3-82351	+	CHART,LOAD	ﾁｬｰﾄ	1	(DUTCH)
-	514A3-82391	+	CHART,LOAD	ﾁｬｰﾄ	1	(PORTUGUESE)
33	02432-01008	+	RIVET	ﾘﾍﾞｯﾄ	4	
34	63110-19831	+	DECAL	ﾃﾞｶﾙ	1	
35	214A7-42181	+	KNOB	ﾉﾌﾞ	1	
36	09210-10300	+	PLATE,NAME	ﾌﾟﾚｰﾄ	1	
-	09210-10300	+	PLATE,NAME	ﾌﾟﾚｰﾄ	1	(ENGLISH)
-	63110-32111	+	PLATE,NAME	ﾌﾟﾚｰﾄ	1	(RUSSIAN)
-	09201-06201	+	PLATE,NAME	ﾌﾟﾚｰﾄ	1	(CHINESE)
-	63110-19211	+	PLATE,NAME	ﾌﾟﾚｰﾄ	1	(GERMAN)
-	63110-19251	+	PLATE,NAME	ﾌﾟﾚｰﾄ	1	(FRENCH)
-	63110-19231	+	PLATE,NAME	ﾌﾟﾚｰﾄ	1	(SPANISH)
-	63110-19291	+	PLATE,NAME	ﾌﾟﾚｰﾄ	1	(DANISH)
-	63110-19331	+	PLATE,NAME	ﾌﾟﾚｰﾄ	1	(GREEK)
-	63110-19311	+	PLATE,NAME	ﾌﾟﾚｰﾄ	1	(ITALIAN)
-	63110-19271	+	PLATE,NAME	ﾌﾟﾚｰﾄ	1	(DUTCH)
-	63110-19351	+	PLATE,NAME	ﾌﾟﾚｰﾄ	1	(PORTUGUESE)
37	62263-47001	+	DECAL,CAUTION	ﾃﾞｶﾙ	1	
38	27419-12072	+	DECAL,CAUTION	ﾃﾞｶﾙ	2	

FIG.42 CYLINDER [HF31A]

(A503HF50) ｼﾘﾝﾀﾞ

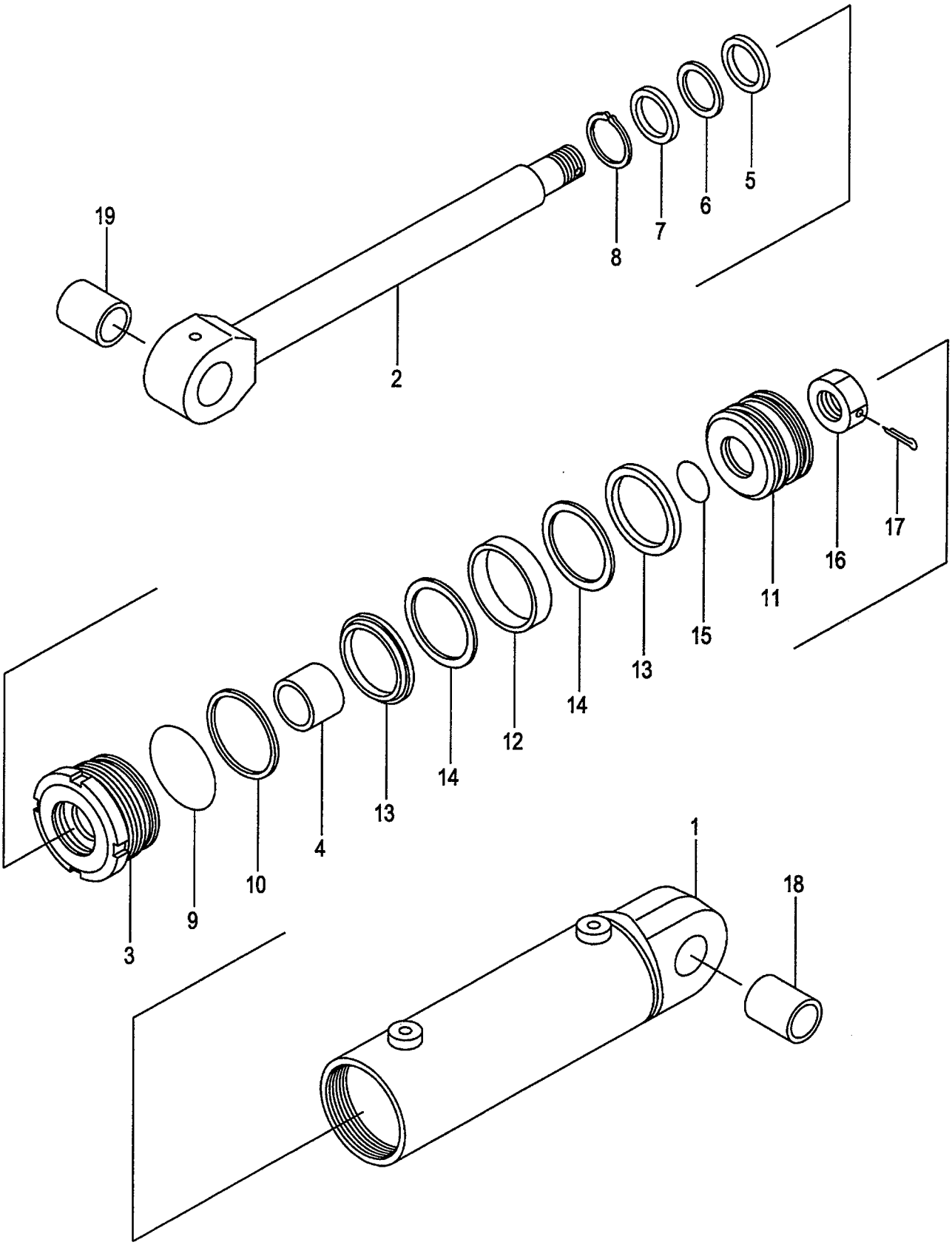

A:HF31A(VM/J)

Item No	Part No.	Mark	Description		Req'd	Remarks : Serial No.
A1	63173-40901		CYL-ASSY	ｼﾘﾝﾀﾞｱｯｾﾝ	2	INC.1-19
-	63173-40911		CYL-ASSY	ｼﾘﾝﾀﾞｱｯｾﾝ	2	[FC] INC.1-19
1	63163-40921		BODY,CYL	ﾎﾞﾃﾞｨ	2	
2	63173-40961		ROD,PISTON	ﾛｯﾄﾞ	2	
-	63173-40971		ROD,PISTON	ﾛｯﾄﾞ	2	[FC]
3	62243-42532		CAP	ｷｬｯﾌﾟ	2	
4	22198-42611		BUSHING	ﾌﾞｯｼﾝｸﾞ	2	
5	NO PART NO.	#*	PACKING	ﾊﾟｯｷﾝｸﾞ	2	
6	NO PART NO.	#*	RING,BACK-UP	ﾘﾝｸﾞ	2	
7	214A8-46001	*	SEAL,DUST	ｼｰﾙ	2	
8	22678-52101	*	RING,SNAP	ｽﾅｯﾌﾟﾘﾝｸﾞ	2	
9	03350-00850	*	O-RING	Oﾘﾝｸﾞ	2	
10	03370-00850	*	RING,BACK-UP	ﾘﾝｸﾞ	2	
11	62253-42261		PISTON	ﾋﾟｽﾄﾝ	2	
12	24608-52401	*	WEARING	ｳｴｱﾘﾝｸﾞ	2	
13	25808-43111	*	PACKING	ﾊﾟｯｷﾝｸﾞ	4	
14	25808-43121	*	RING,BACK-UP	ﾘﾝｸﾞ	4	
15	03320-00400		O-RING	Oﾘﾝｸﾞ	2	
16	63626-23051		NUT	ﾅｯﾄ	2	
17	02200-06060		PIN,COTTER	ﾋﾟﾝ	2	
18	62243-42821		BUSHING	ﾌﾞｯｼﾝｸﾞ	2	
19	63173-42821		BUSHING	ﾌﾞｯｼﾝｸﾞ	2	
K1	22438-59821	*	KIT,PACKING	ﾊﾟｯｷﾝｸﾞｷｯﾄ	2	INC.5,6
K2	25818-99802		KIT,REPAIR	ﾘﾍﾟｱｷｯﾄ	2	INC.7-10,12-14,K1

FIG.43 HYDRAULIC LINE (CONNECTOR-CYLINDER)

(A503HF60) ﾊｲﾄﾞﾛﾘｯｸﾗｲﾝ (ｺﾈｸﾀｰｼﾘﾝﾀﾞ)

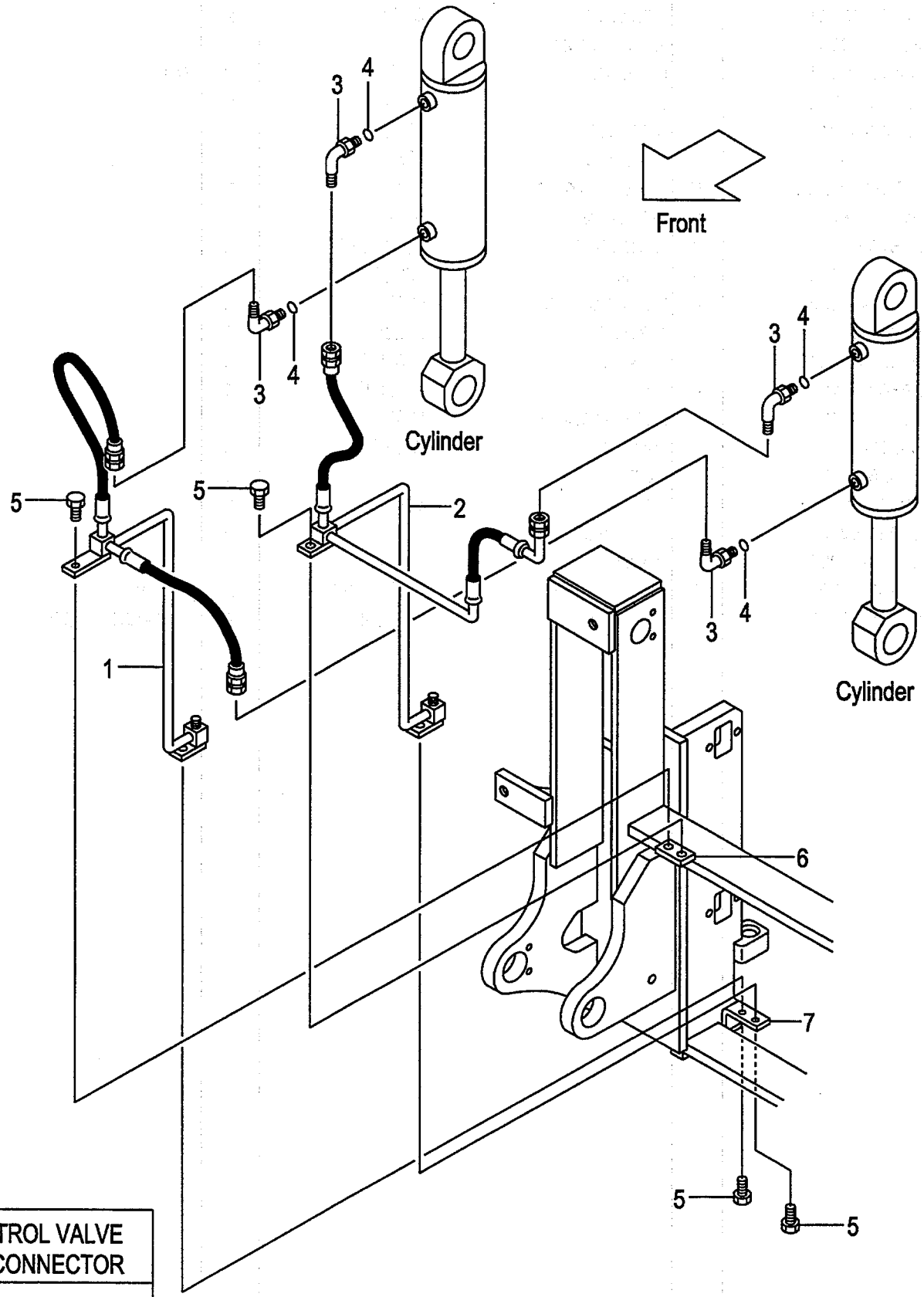

CONTROL VALVE -CONNECTOR
AP031F

A:HF31A(VM/J)

Item No	Part No.	Mark	Description		Req'd	Remarks : Serial No.
1	631A3-42401		PIPE	ﾊﾟｲﾌﾟ	1	
2	631A3-42411		PIPE	ﾊﾟｲﾌﾟ	1	
A1	04150-20303		ELBOW-ASSY	ｴﾙﾎﾞｱｯｾﾝ	4	INC.3,4
3	04150-00303		ELBOW	ｴﾙﾎﾞ	4	
4	03320-00140		O-RING	Oﾘﾝｸﾞ	4	
5	01184-10020		BOLT	ﾎﾞﾙﾄ	4	
6	62253-42511		PLATE	ﾌﾟﾚｰﾄ	1	
7	622A3-42501		PLATE	ﾌﾟﾚｰﾄ	1	

FIG.44 LOAD GRAB

(A502LG10) **[LG2A4,LG2B4,LG2C4,LG2D4,LG2E4,LG2F4,LG2G4,LG2H4]**

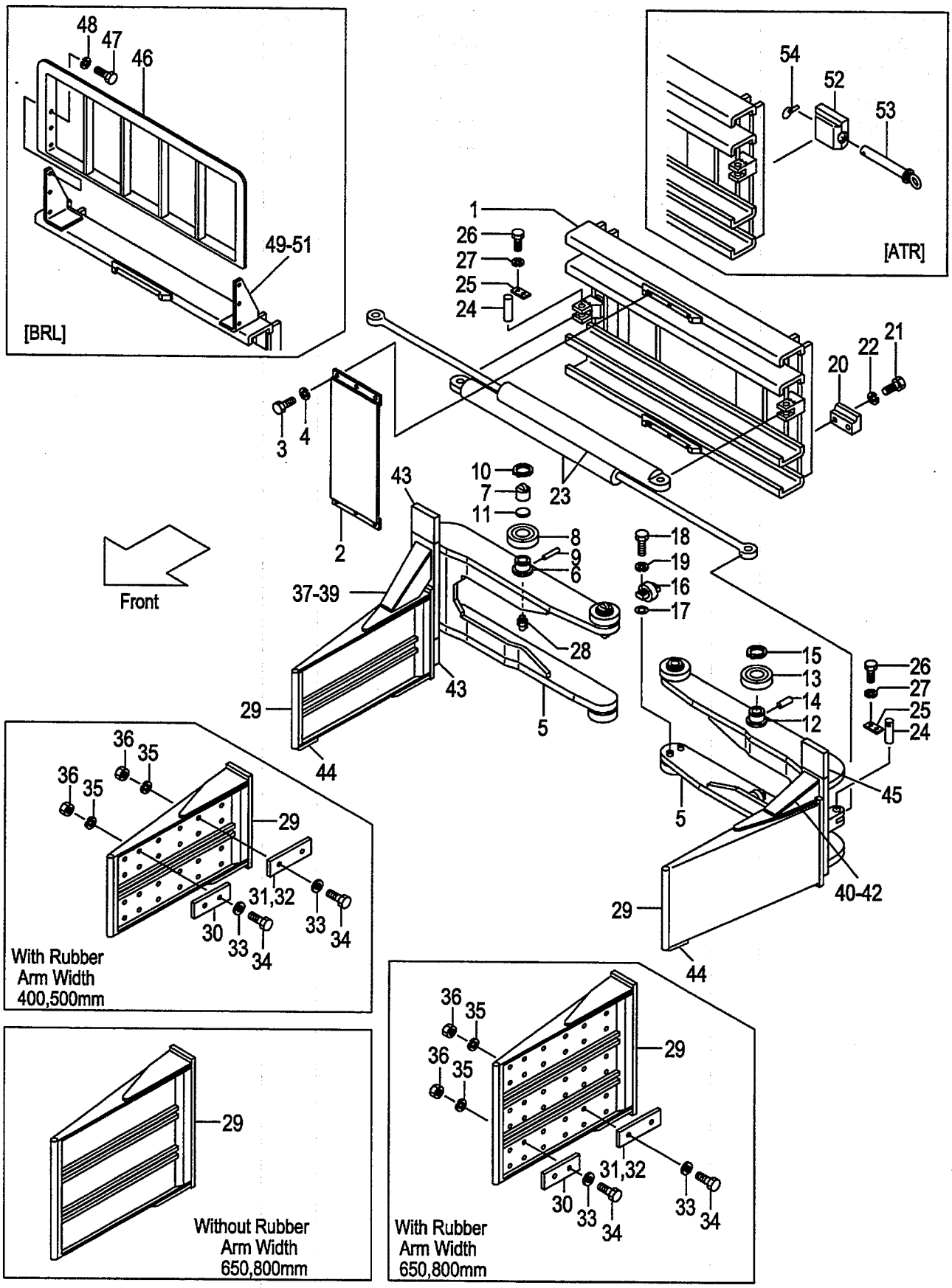

A:LG2A4(J) D:LG2D4(J) G:LG2G4(J)
B:LG2B4(J) E:LG2E4(J) H:LG2H4(J)
C:LG2C4(J) F:LG2F4(J)

FIG.44
(A502LG10)

Item No	Part No.	Mark	Description		Req'd	Remarks : Serial No.
A1	62246-20001		GRAB-ASSY,LOAD	ﾛｰﾄﾞｸﾞﾗﾌﾞｱｯｾﾝ	1	INC.1-36
-	62246-20011		GRAB-ASSY,LOAD	ﾛｰﾄﾞｸﾞﾗﾌﾞｱｯｾﾝ	1	INC.1-36
-	62246-20021		GRAB-ASSY,LOAD	ﾛｰﾄﾞｸﾞﾗﾌﾞｱｯｾﾝ	1	INC.1-36
-	62246-20031		GRAB-ASSY,LOAD	ﾛｰﾄﾞｸﾞﾗﾌﾞｱｯｾﾝ	1	INC.1-36
-	62246-20041		GRAB-ASSY,LOAD	ﾛｰﾄﾞｸﾞﾗﾌﾞｱｯｾﾝ	1	INC.1-36
-	62246-20051		GRAB-ASSY,LOAD	ﾛｰﾄﾞｸﾞﾗﾌﾞｱｯｾﾝ	1	INC.1-36
-	62246-20061		GRAB-ASSY,LOAD	ﾛｰﾄﾞｸﾞﾗﾌﾞｱｯｾﾝ	1	INC.1-36
-	62246-20071		GRAB-ASSY,LOAD	ﾛｰﾄﾞｸﾞﾗﾌﾞｱｯｾﾝ	1	INC.1-36
-	62346-20001		GRAB-ASSY,LOAD	ﾛｰﾄﾞｸﾞﾗﾌﾞｱｯｾﾝ	1	INC.1-36
-	62346-20011		GRAB-ASSY,LOAD	ﾛｰﾄﾞｸﾞﾗﾌﾞｱｯｾﾝ	1	INC.1-36
-	62346-20021		GRAB-ASSY,LOAD	ﾛｰﾄﾞｸﾞﾗﾌﾞｱｯｾﾝ	1	INC.1-36
-	62346-20031		GRAB-ASSY,LOAD	ﾛｰﾄﾞｸﾞﾗﾌﾞｱｯｾﾝ	1	INC.1-36
-	62346-20041		GRAB-ASSY,LOAD	ﾛｰﾄﾞｸﾞﾗﾌﾞｱｯｾﾝ	1	INC.1-36
-	62346-20051		GRAB-ASSY,LOAD	ﾛｰﾄﾞｸﾞﾗﾌﾞｱｯｾﾝ	1	INC.1-36
-	62346-20061		GRAB-ASSY,LOAD	ﾛｰﾄﾞｸﾞﾗﾌﾞｱｯｾﾝ	1	INC.1-36
-	62346-20071		GRAB-ASSY,LOAD	ﾛｰﾄﾞｸﾞﾗﾌﾞｱｯｾﾝ	1	INC.1-36
A2	62246-20101		COMBI.-ASSY,BODY		1	A
				ﾎﾞﾃﾞｨｺﾝﾋﾞﾈｰｼｮﾝｱｯｾﾝ		INC.1,5,23
-	62246-20111		COMBI.-ASSY,BODY		1	B
				ﾎﾞﾃﾞｨｺﾝﾋﾞﾈｰｼｮﾝｱｯｾﾝ		INC.1,5,23
-	62246-20121		COMBI.-ASSY,BODY		1	C
				ﾎﾞﾃﾞｨｺﾝﾋﾞﾈｰｼｮﾝｱｯｾﾝ		INC.1,5,23
-	62246-20131		COMBI.-ASSY,BODY		1	D
				ﾎﾞﾃﾞｨｺﾝﾋﾞﾈｰｼｮﾝｱｯｾﾝ		INC.1,5,23
-	62346-20101		COMBI.-ASSY,BODY		1	E
				ﾎﾞﾃﾞｨｺﾝﾋﾞﾈｰｼｮﾝｱｯｾﾝ		INC.1,5,23
-	62346-20111		COMBI.-ASSY,BODY		1	F
				ﾎﾞﾃﾞｨｺﾝﾋﾞﾈｰｼｮﾝｱｯｾﾝ		INC.1,5,23
-	62346-20121		COMBI.-ASSY,BODY		1	G
				ﾎﾞﾃﾞｨｺﾝﾋﾞﾈｰｼｮﾝｱｯｾﾝ		INC.1,5,23
-	62346-20131		COMBI.-ASSY,BODY		1	H
				ﾎﾞﾃﾞｨｺﾝﾋﾞﾈｰｼｮﾝｱｯｾﾝ		INC.1,5,23
1	62246-20151		RAIL	ﾚｰﾙ	1	A,E
-	62246-20161		RAIL	ﾚｰﾙ	1	B,F
-	62246-20171		RAIL	ﾚｰﾙ	1	C,G
-	62246-20181		RAIL	ﾚｰﾙ	1	D,H
2	62246-22121		PLATE	ﾌﾟﾚｰﾄ	1	
3	01103-10025		BOLT	ﾎﾞﾙﾄ	6	
4	02011-00010		WASHER	ﾜｯｼｬ	6	
5	62246-20302		PLATE,SLIDE	ﾌﾟﾚｰﾄ	2	A,B,C,D
-	63246-20152		PLATE,SLIDE	ﾌﾟﾚｰﾄ	2	E,F,G,H
A3	62036-20302		ROLLER-ASSY,CROSS	ｸﾛｽﾛｰﾗｱｯｾﾝ	4	INC.6-10
6	NO PART NO.	#	STUD	ｽﾀｯﾄﾞ	4	
7	62036-22512		UNIT,ROLLER,SIDE	ﾕﾆｯﾄ	4	
8	62036-22521		ROLLER,GUIDE	ﾛｰﾗ	4	
9	02270-03010		PIN	ﾋﾟﾝ	4	
10	02100-00060		RING,SNAP	ｽﾅｯﾌﾟﾘﾝｸﾞ	4	
11	61026-22562		SHIM	ｼﾑ	12	
A4	62036-20401		ROLLER-ASSY,GUIDE	ｶﾞｲﾄﾞﾛｰﾗｱｯｾﾝ	4	INC.12-15
12	NO PART NO.	#	STUD	ｽﾀｯﾄﾞ	4	

FIG.44 LOAD GRAB

(A502LG10) **[LG2A4,LG2B4,LG2C4,LG2D4,LG2E4,LG2F4,LG2G4,LG2H4]**

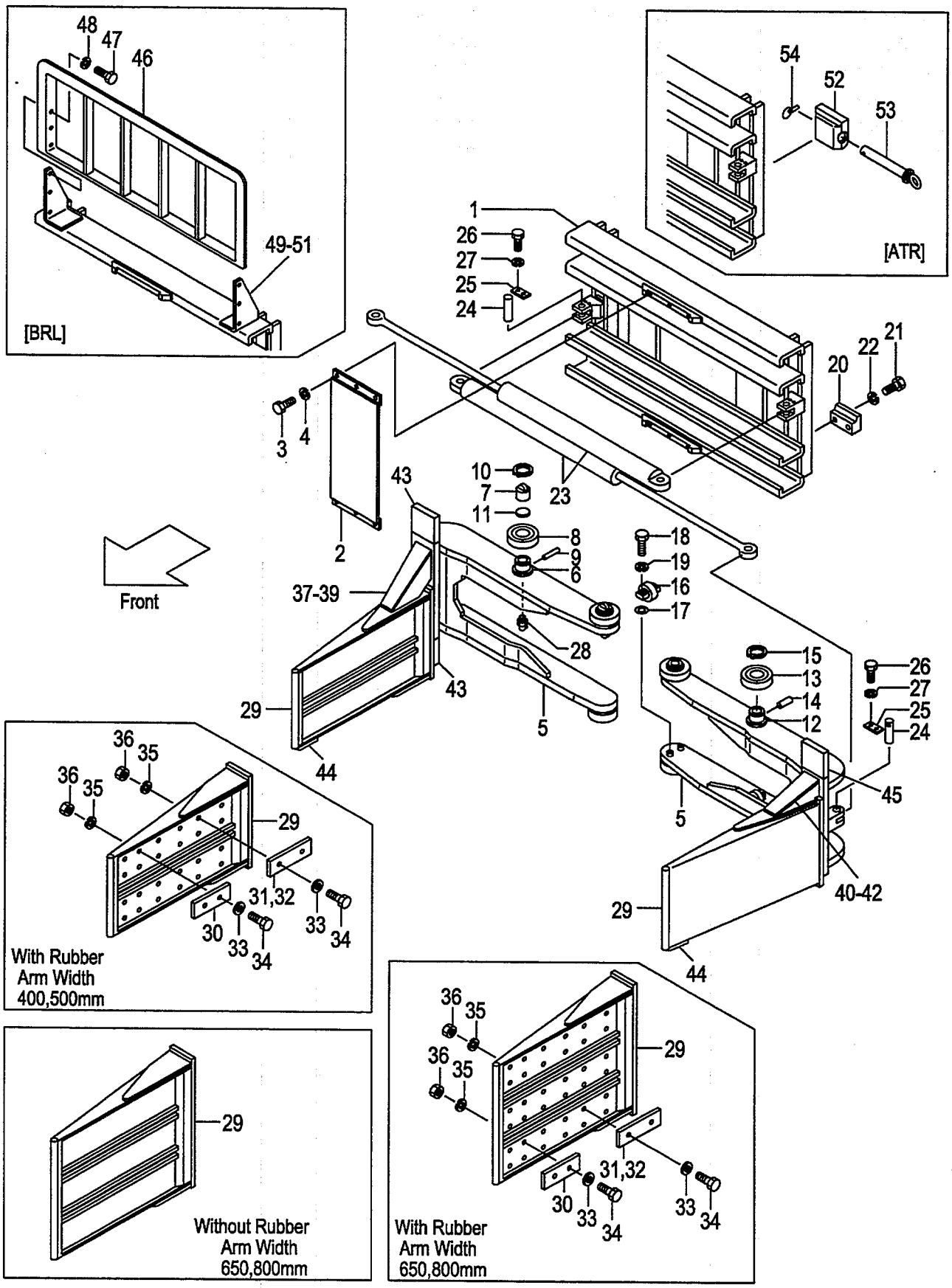

A:LG2A4(J) D:LG2D4(J) G:LG2G4(J)
B:LG2B4(J) E:LG2E4(J) H:LG2H4(J)
C:LG2C4(J) F:LG2F4(J)

FIG.44
(A502LG10)

Item No	Part No.	Mark	Description		Req'd	Remarks : Serial No.
13	62036-22521		ROLLER,GUIDE	ローラ	4	
14	02270-03010		PIN	ピン	4	
15	02100-00060		RING,SNAP	スナップリング	4	
16	62036-21402		ROLLER,SIDE	ローラ	4	
17	23308-22061		SHIM	シム	8	
18	01100-10045		BOLT	ボルト	8	
19	80223-00071		WASHER	ワッシャ	8	
20	62246-24601		GUIDE	ガイド	2	
21	01100-16055		BOLT	ボルト	4	
22	02010-00016		WASHER	ワッシャ	4	
23	62036-20901		CYL	シリンダ	2	A,E
						SEE FIG.45
-	62246-20901		CYL	シリンダ	2	B,F
						SEE FIG.45
-	62246-20911		CYL	シリンダ	2	C,G
						SEE FIG.45
-	62246-20921		CYL	シリンダ	2	D,H
						SEE FIG.45
24	62036-22301		PIN	ピン	4	
25	52516-80461		PLATE	プレート	4	
26	01100-08016		BOLT	ボルト	8	
27	02010-00008		WASHER	ワッシャ	8	
28	04901-00160		FITTING	フィッティング	4	
29	62246-20403		ARM	アーム	2	[ARL037][ARLE37]
-	62246-20413		ARM	アーム	2	[ARL038][ARLE38]
-	62246-20423		ARM	アーム	2	[ARL039][ARLE39]
-	62246-20433		ARM	アーム	2	[ARL040][ARLE40]
-	62246-20443		ARM	アーム	2	[ARL041][ARLE41]
-	62246-20453		ARM	アーム	2	[ARL042][ARLE42]
-	62246-20463		ARM	アーム	2	[ARL043][ARLE43]
-	62246-20473		ARM	アーム	2	[ARL044][ARLE44]
-	62246-20483		ARM	アーム	2	[ARL045][ARLE45]
-	62246-20493		ARM	アーム	2	[ARL046][ARLE46]
-	62246-20503		ARM	アーム	2	[ARL047][ARLE47]
-	62246-20513		ARM	アーム	2	[ARL048][ARLE48]
-	62246-20523		ARM	アーム	2	[ARL049][ARLE49]
-	62246-20533		ARM	アーム	2	[ARL050][ARLE50]
-	62246-20543		ARM	アーム	2	[ARL051][ARLE51]
-	62246-20553		ARM	アーム	2	[ARL052][ARLE52]
-	62246-20563		ARM	アーム	2	[ARL053][ARLE53]
-	62246-20573		ARM	アーム	2	[ARL054][ARLE54]
-	62246-20583		ARM	アーム	2	[ARL055][ARLE55]
-	62246-20593		ARM	アーム	2	[ARL056][ARLE56]
-	62246-20603		ARM	アーム	2	[ARL057][ARLE57]
-	62246-20613		ARM	アーム	2	[ARL058][ARLE58]
-	62246-20623		ARM	アーム	2	[ARL059][ARLE59]
-	62246-20633		ARM	アーム	2	[ARL060][ARLE60]
-	62246-20643		ARM	アーム	2	[ARL061][ARLE61]
-	62246-20653		ARM	アーム	2	[ARL062][ARLE62]
-	62246-20663		ARM	アーム	2	[ARL063][ARLE63]

FIG.44 LOAD GRAB

(A502LG10) **[LG2A4,LG2B4,LG2C4,LG2D4,LG2E4,LG2F4,LG2G4,LG2H4]**

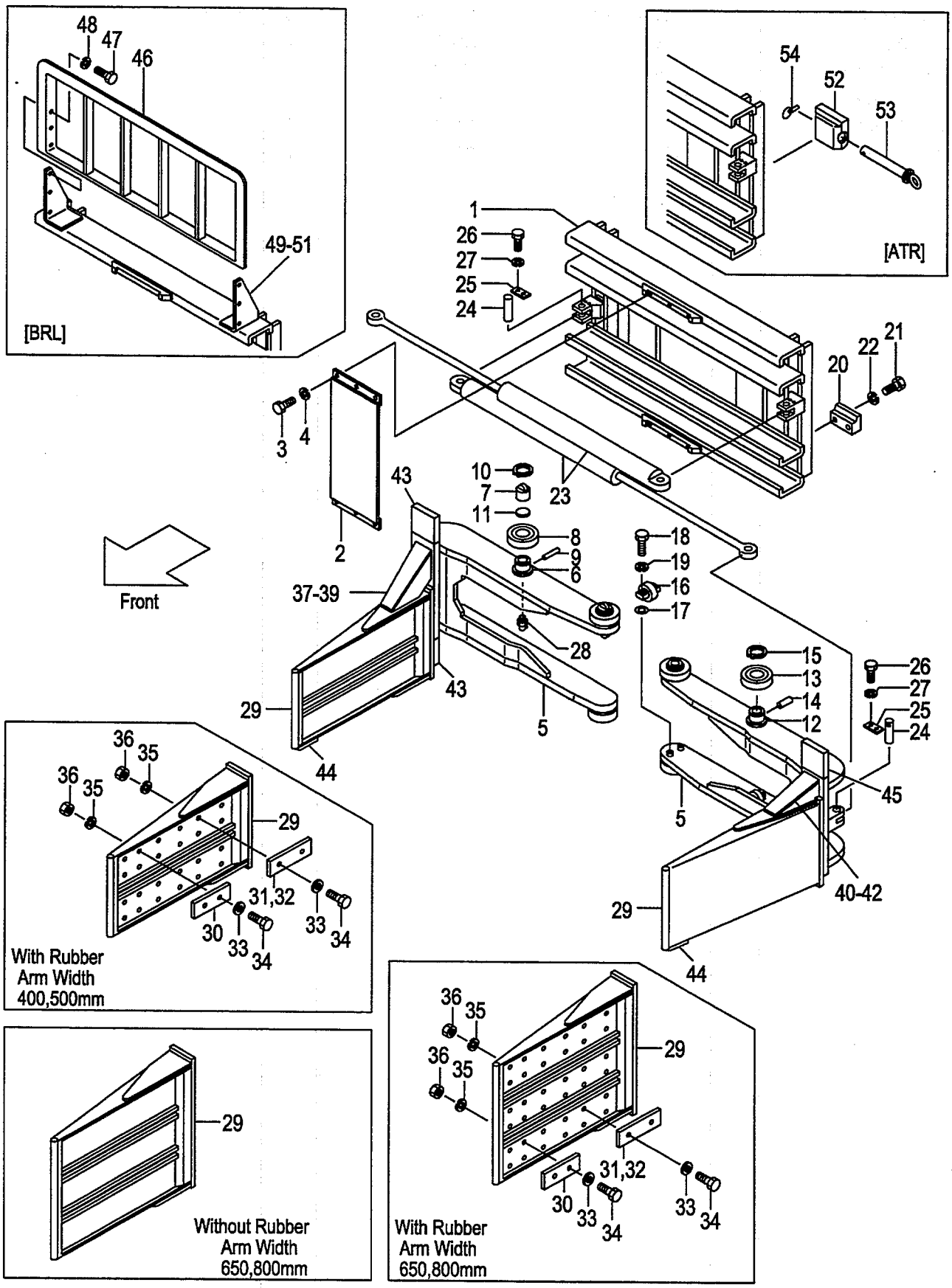

A:LG2A4(J) D:LG2D4(J) G:LG2G4(J)
B:LG2B4(J) E:LG2E4(J) H:LG2H4(J)
C:LG2C4(J) F:LG2F4(J)

FIG.44
(A502LG10)

Item No	Part No.	Mark	Description		Req'd	Remarks : Serial No.
-	62246-20673		ARM	ｱｰﾑ	2	[ARL064][ARLE64]
-	62246-20683		ARM	ｱｰﾑ	2	[ARL065][ARLE65]
-	62246-20693		ARM	ｱｰﾑ	2	[ARL066][ARLE66]
-	62246-20703		ARM	ｱｰﾑ	2	[ARL067][ARLE67]
-	62246-20713		ARM	ｱｰﾑ	2	[ARL068][ARLE68]
-	62246-20723		ARM	ｱｰﾑ	2	[ARL069][ARLE69]
-	62246-20733		ARM	ｱｰﾑ	2	[ARL070][ARLE70]
-	62246-20743		ARM	ｱｰﾑ	2	[ARL071][ARLE71]
-	62246-20753		ARM	ｱｰﾑ	2	[ARL072][ARLE72]
-	62346-20403		ARM	ｱｰﾑ	2	[AR0L01][ARLE01]
-	62346-20413		ARM	ｱｰﾑ	2	[ARL002][ARLE02]
-	62346-20423		ARM	ｱｰﾑ	2	[ARL003][ARLE03]
-	62346-20433		ARM	ｱｰﾑ	2	[ARL004][ARLE04]
-	62346-20443		ARM	ｱｰﾑ	2	[ARL005][ARLE05]
-	62346-20453		ARM	ｱｰﾑ	2	[ARL006][ARLE06]
-	62346-20463		ARM	ｱｰﾑ	2	[ARL007][ARLE07]
-	62346-20473		ARM	ｱｰﾑ	2	[ARL008][ARLE08]
-	62346-20483		ARM	ｱｰﾑ	2	[ARL009][ARLE09]
-	62346-20493		ARM	ｱｰﾑ	2	[ARL010][ARLE10]
-	62346-20503		ARM	ｱｰﾑ	2	[ARL011][ARLE11]
-	62346-20513		ARM	ｱｰﾑ	2	[ARL012][ARLE12]
-	62346-20523		ARM	ｱｰﾑ	2	[ARL013][ARLE13]
-	62346-20533		ARM	ｱｰﾑ	2	[ARL014][ARLE14]
-	62346-20543		ARM	ｱｰﾑ	2	[ARL015][ARLE15]
-	62346-20553		ARM	ｱｰﾑ	2	[ARL016][ARLE16]
-	62346-20563		ARM	ｱｰﾑ	2	[ARL017][ARLE17]
-	62346-20573		ARM	ｱｰﾑ	2	[ARL018][ARLE18]
-	62346-20583		ARM	ｱｰﾑ	2	[ARL019][ARLE19]
-	62346-20593		ARM	ｱｰﾑ	2	[ARL020][ARLE20]
-	62346-20603		ARM	ｱｰﾑ	2	[ARL021][ARLE21]
-	62346-20613		ARM	ｱｰﾑ	2	[ARL022][ARLE22]
-	62346-20623		ARM	ｱｰﾑ	2	[ARL023][ARLE23]
-	62346-20633		ARM	ｱｰﾑ	2	[ARL024][ARLE24]
-	62346-20643		ARM	ｱｰﾑ	2	[ARL025][ARLE25]
-	62346-20653		ARM	ｱｰﾑ	2	[ARL026][ARLE26]
-	62346-20663		ARM	ｱｰﾑ	2	[ARL027][ARLE27]
-	62346-20673		ARM	ｱｰﾑ	2	[ARL028][ARLE28]
-	62346-20683		ARM	ｱｰﾑ	2	[ARL029][ARLE29]
-	62346-20693		ARM	ｱｰﾑ	2	[ARL030][ARLE30]
-	62346-20703		ARM	ｱｰﾑ	2	[ARL031][ARLE31]
-	62346-20713		ARM	ｱｰﾑ	2	[ARL032][ARLE32]
-	62346-20723		ARM	ｱｰﾑ	2	[ARL033][ARLE33]
-	62346-20733		ARM	ｱｰﾑ	2	[ARL034][ARLE34]
-	62346-20743		ARM	ｱｰﾑ	2	[ARL035][ARLE35]
-	62346-20753		ARM	ｱｰﾑ	2	[ARL036][ARLE36]
30	62346-24001		RUBBER	ﾗﾊﾞｰ	8	(ARM WIDTH 400,500)
-	62346-24001		RUBBER	ﾗﾊﾞｰ	12	(ARM WIDTH 650,800)
31	62346-24021		RUBBER	ﾗﾊﾞｰ	16	[ARL001][ARLE01][ARL002] [ARLE02]

FIG.44 LOAD GRAB

(A502LG10) **[LG2A4,LG2B4,LG2C4,LG2D4,LG2E4,LG2F4,LG2G4,LG2H4]**

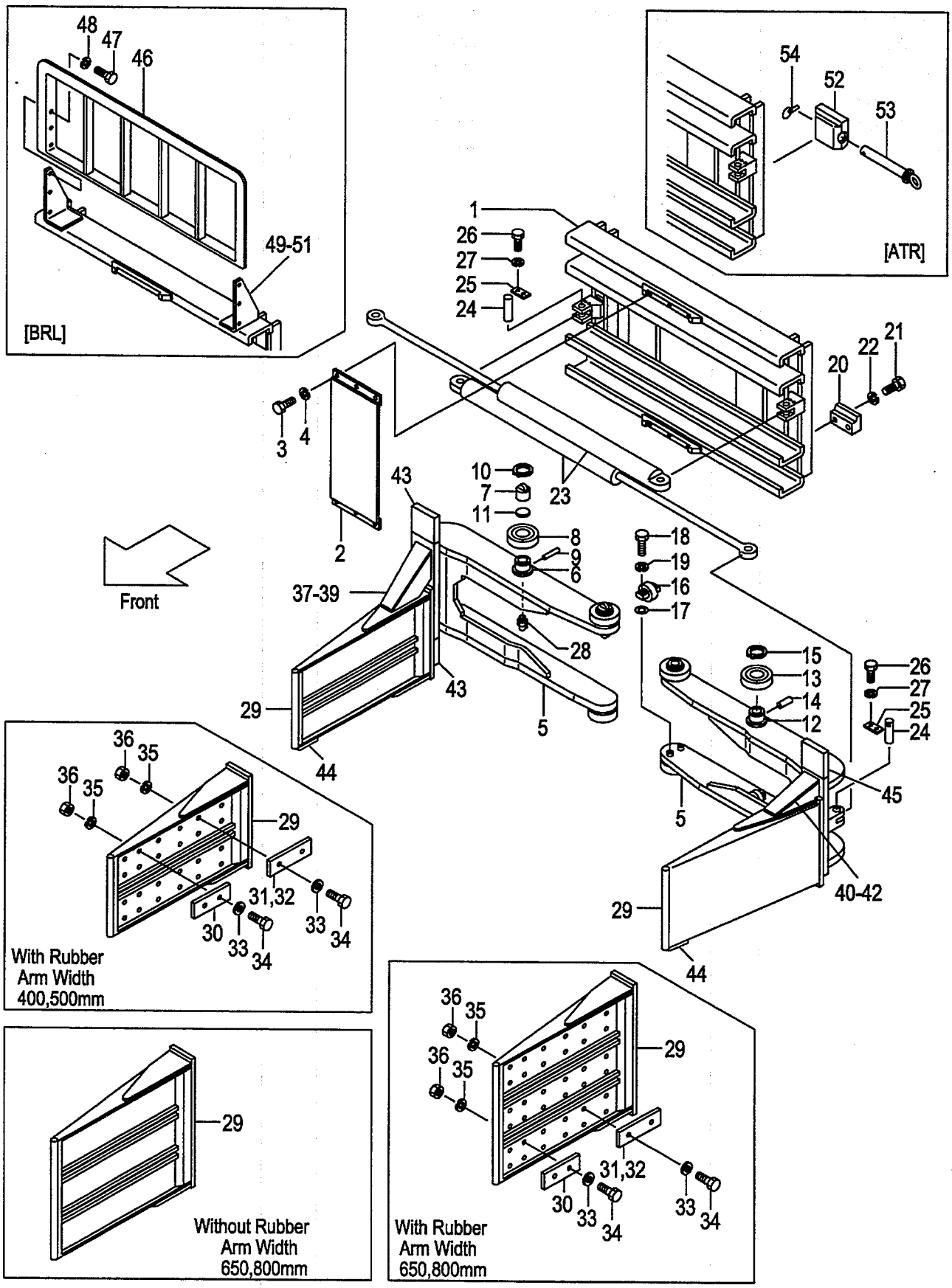

A:LG2A4(J) D:LG2D4(J) G:LG2G4(J)
B:LG2B4(J) E:LG2E4(J) H:LG2H4(J)
C:LG2C4(J) F:LG2F4(J)

FIG.44
(A502LG10)

Item No	Part No.	Mark	Description	Req'd	Remarks : Serial No.
-	62346-24021		RUBBER ﾗﾊﾞｰ	24	[ARL003][ARLE03][ARL004] [ARLE04]
-	62346-24011		RUBBER ﾗﾊﾞｰ	24	[ARL005][ARLE05][ARL006] [ARLE06]
-	62346-24011		RUBBER ﾗﾊﾞｰ	36	[ARL007][ARLE07][ARL008] [ARLE08]
-	62346-24011		RUBBER,L195 ﾗﾊﾞｰ	8	[ARL009][ARLE09][ARL010] [ARLE10]
-	62346-24011		RUBBER,L195 ﾗﾊﾞｰ	12	[ARL011][ARLE11][ARL012] [ARLE12]
-	62346-24011		RUBBER ﾗﾊﾞｰ	32	[ARL013][ARLE13][ARL014] [ARLE14]
-	62346-24011		RUBBER ﾗﾊﾞｰ	48	[ARL015][ARLE15][ARL016] [ARLE16]
-	62346-24011		RUBBER,L195 ﾗﾊﾞｰ	16	[ARL017][ARLE17][ARL018] [ARLE18]
-	62346-24011		RUBBER,L195 ﾗﾊﾞｰ	24	[ARL019][ARLE19][ARL020] [ARLE20]
-	62346-24021		RUBBER ﾗﾊﾞｰ	32	[ARL021][ARLE21][ARL022] [ARLE22]
-	62346-24021		RUBBER ﾗﾊﾞｰ	48	[ARL023][ARLE23][ARL024] [ARLE24]
-	62346-24011		RUBBER,L195 ﾗﾊﾞｰ	32	[ARL025][ARLE25][ARL026] [ARLE26]
-	62346-24011		RUBBER,L195 ﾗﾊﾞｰ	48	[ARL027][ARLE27][ARL028] [ARLE28]
-	62346-24011		RUBBER,L195 ﾗﾊﾞｰ	16	[ARL029][ARLE29][ARL030] [ARLE30]
-	62346-24011		RUBBER,L195 ﾗﾊﾞｰ	24	[ARL031][ARLE31][ARL032] [ARLE32]
-	62346-24021		RUBBER ﾗﾊﾞｰ	40	[ARL033][ARLE33][ARL034] [ARLE34]
-	62346-24021		RUBBER ﾗﾊﾞｰ	60	[ARL035][ARLE35][ARL036] [ARLE36]
32	62346-24021		RUBBER ﾗﾊﾞｰ	16	[ARL009][ARLE09][ARL010] [ARLE10]
-	62346-24021		RUBBER ﾗﾊﾞｰ	24	[ARL011][ARLE11][ARL012] [ARLE12]
-	62346-24021		RUBBER ﾗﾊﾞｰ	16	[ARL017][ARLE17][ARL018] [ARLE18]
-	62346-24021		RUBBER ﾗﾊﾞｰ	24	[ARL019][ARLE19][ARL020] [ARLE20]
-	62346-24021		RUBBER ﾗﾊﾞｰ	8	[ARL025][ARLE25][ARL026] [ARLE26]
-	62346-24021		RUBBER ﾗﾊﾞｰ	12	[ARL027][ARLE27][ARL028] [ARLE28]
-	62346-24021		RUBBER ﾗﾊﾞｰ	24	[ARL029][ARLE29][ARL030] [ARLE30]
-	62346-24021		RUBBER ﾗﾊﾞｰ	36	[ARL031][ARLE31][ARL032] [ARLE32]

FIG.44 LOAD GRAB

(A502LG10) **[LG2A4,LG2B4,LG2C4,LG2D4,LG2E4,LG2F4,LG2G4,LG2H4]**

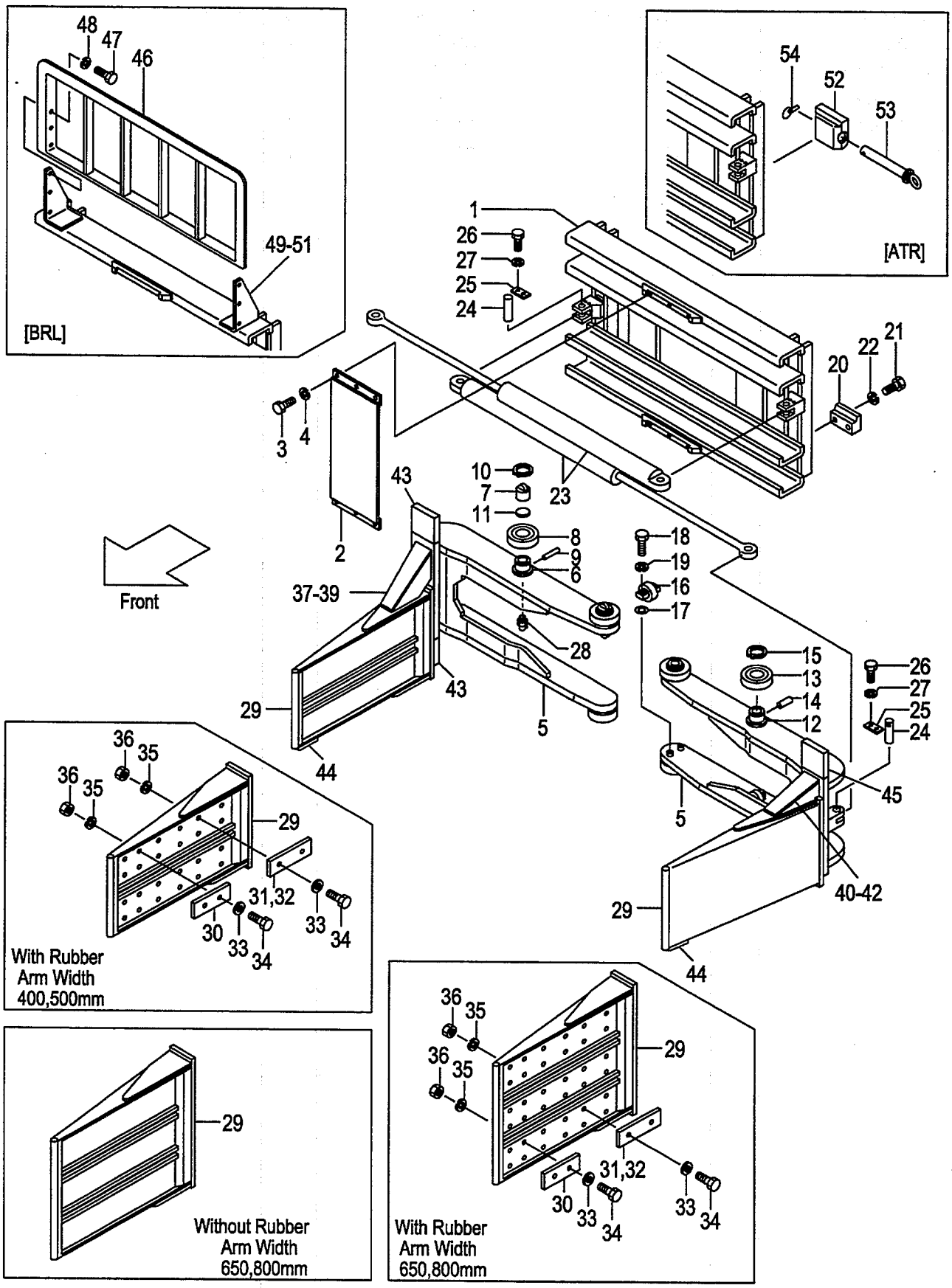

Item No	Part No.	Mark	Description		Req'd	Remarks : Serial No.
33	62346-24101		WASHER	ﾜｯｼｬ	48	[ARL001][ARLE01][ARL002] [ARLE02]
-	62346-24101		WASHER	ﾜｯｼｬ	72	[ARL003][ARLE03][ARL004] [ARLE04]
-	62346-24101		WASHER	ﾜｯｼｬ	64	[ARL005][ARLE05][ARL006] [ARLE06]
-	62346-24101		WASHER	ﾜｯｼｬ	96	[ARL007][ARLE07][ARL008] [ARLE08]
-	62346-24101		WASHER	ﾜｯｼｬ	64	[ARL009][ARLE09][ARL010] [ARLE10]
-	62346-24101		WASHER	ﾜｯｼｬ	96	[ARL011][ARLE11][ARL012] [ARLE12]
-	62346-24101		WASHER	ﾜｯｼｬ	80	[ARL013][ARLE13][ARL014] [ARLE14]
-	62346-24101		WASHER	ﾜｯｼｬ	120	[ARL015][ARLE15][ARL016] [ARLE16]
-	62346-24101		WASHER	ﾜｯｼｬ	80	[ARL017][ARLE17][ARL018] [ARLE18]
-	62346-24101		WASHER	ﾜｯｼｬ	120	[ARL019][ARLE19][ARL020] [ARLE20]
-	62346-24101		WASHER	ﾜｯｼｬ	80	[ARL021][ARLE21][ARL022] [ARLE22]
-	62346-24101		WASHER	ﾜｯｼｬ	120	[ARL023][ARLE23][ARL024] [ARLE24]
-	62346-24101		WASHER	ﾜｯｼｬ	96	[ARL025][ARLE25][ARL026] [ARLE26]
-	62346-24101		WASHER	ﾜｯｼｬ	144	[ARL027][ARLE27][ARL028] [ARLE28]
-	62346-24101		WASHER	ﾜｯｼｬ	96	[ARL029][ARLE29][ARL030] [ARLE30]
-	62346-24101		WASHER	ﾜｯｼｬ	144	[ARL031][ARLE31][ARL032] [ARLE32]
-	62346-24101		WASHER	ﾜｯｼｬ	96	[ARL033][ARLE33][ARL034] [ARLE34]
-	62346-24101		WASHER	ﾜｯｼｬ	144	[ARL035][ARLE35][ARL036] [ARLE36]
34	01300-08032		BOLT	ﾎﾞﾙﾄ	48	[ARL001][ARLE01][ARL002] [ARLE02]
-	01300-08032		BOLT	ﾎﾞﾙﾄ	72	[ARL003][ARLE03][ARL004] [ARLE04]
-	01300-08032		BOLT	ﾎﾞﾙﾄ	64	[ARL005][ARLE05][ARL006] [ARLE06]
-	01300-08032		BOLT	ﾎﾞﾙﾄ	96	[ARL007][ARLE07][ARL008] [ARLE08]
-	01300-08032		BOLT	ﾎﾞﾙﾄ	64	[ARL009][ARLE09][ARL010] [ARLE10]
-	01300-08032		BOLT	ﾎﾞﾙﾄ	96	[ARL011][ARLE11][ARL012] [ARLE12]
-	01300-08032		BOLT	ﾎﾞﾙﾄ	80	[ARL013][ARLE13][ARL014] [ARLE14]

FIG.44 LOAD GRAB

(A502LG10) **[LG2A4,LG2B4,LG2C4,LG2D4,LG2E4,LG2F4,LG2G4,LG2H4]**

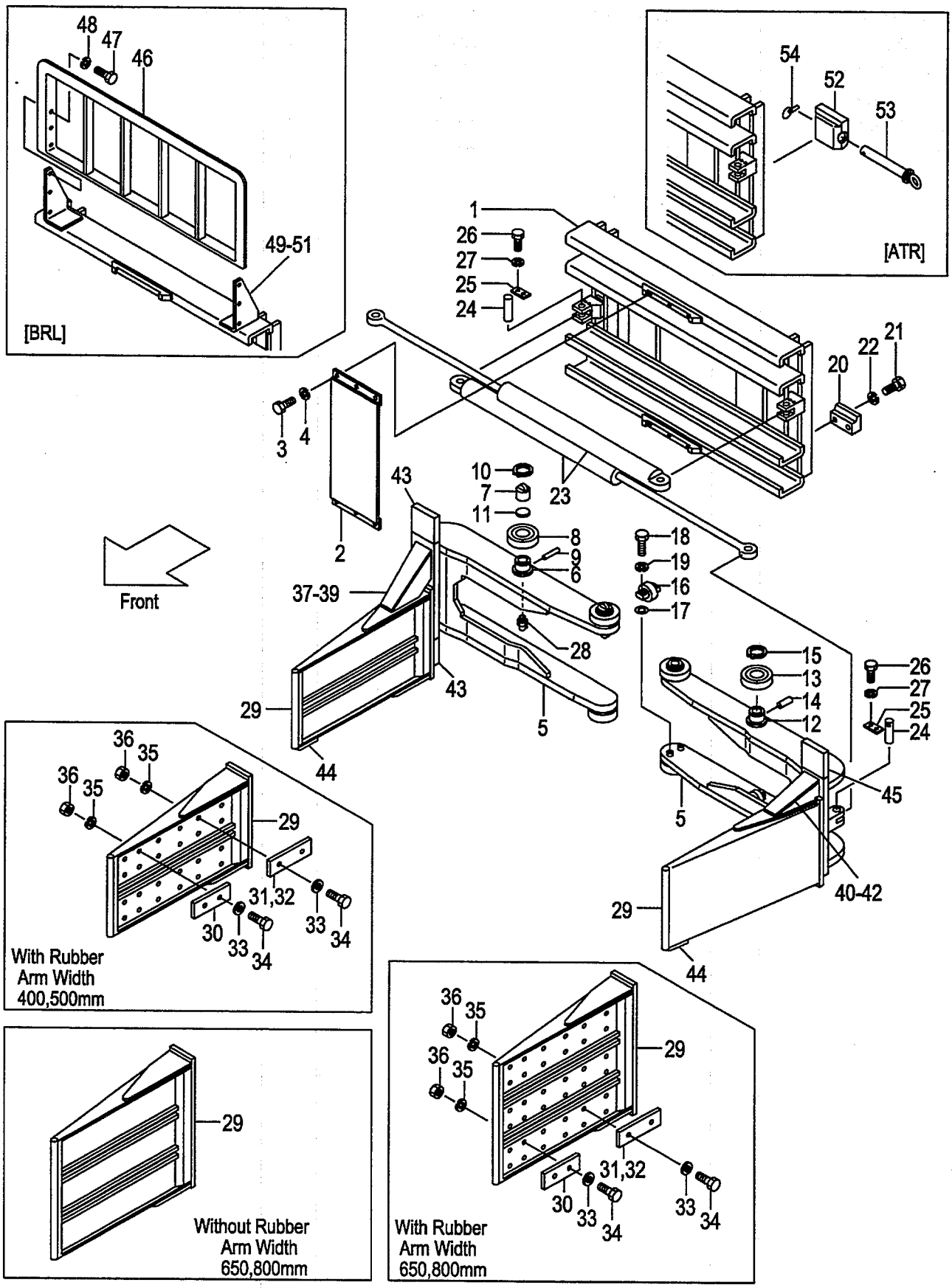

A:LG2A4(J) D:LG2D4(J) G:LG2G4(J)
B:LG2B4(J) E:LG2E4(J) H:LG2H4(J)
C:LG2C4(J) F:LG2F4(J)

FIG.44
(A502LG10)

Item No	Part No.	Mark	Description		Req'd	Remarks : Serial No.
-	01300-08032		BOLT	ﾎﾞﾙﾄ	120	[ARL015][ARLE15][ARL016] [ARLE16]
-	01300-08032		BOLT	ﾎﾞﾙﾄ	80	[ARL017][ARLE17][ARL018] [ARLE18]
-	01300-08032		BOLT	ﾎﾞﾙﾄ	120	[ARL019][ARLE19][ARL020] [ARLE20]
-	01300-08032		BOLT	ﾎﾞﾙﾄ	80	[ARL021][ARLE21][ARL022] [ARLE22]
-	01300-08032		BOLT	ﾎﾞﾙﾄ	120	[ARL023][ARLE23][ARL024] [ARLE24]
-	01300-08032		BOLT	ﾎﾞﾙﾄ	96	[ARL025][ARLE25][ARL026] [ARLE26]
-	01300-08032		BOLT	ﾎﾞﾙﾄ	144	[ARL027][ARLE27][ARL028] [ARLE28]
-	01300-08032		BOLT	ﾎﾞﾙﾄ	96	[ARL029][ARLE29][ARL030] [ARLE30]
-	01300-08032		BOLT	ﾎﾞﾙﾄ	144	[ARL031][ARLE31][ARL032] [ARLE32]
-	01300-08032		BOLT	ﾎﾞﾙﾄ	96	[ARL033][ARLE33][ARL034] [ARLE34]
-	01300-08032		BOLT	ﾎﾞﾙﾄ	144	[ARL035][ARLE35][ARL036] [ARLE36]
35	02010-00008		WASHER	ﾜｯｼｬ	48	[ARL001][ARLE01][ARL002] [ARLE02]
-	02010-00008		WASHER	ﾜｯｼｬ	72	[ARL003][ARLE03][ARL004] [ARLE04]
-	02010-00008		WASHER	ﾜｯｼｬ	64	[ARL005][ARLE05][ARL006] [ARLE06]
-	02010-00008		WASHER	ﾜｯｼｬ	96	[ARL007][ARLE07][ARL008] [ARLE08]
-	02010-00008		WASHER	ﾜｯｼｬ	64	[ARL009][ARLE09][ARL010] [ARLE10]
-	02010-00008		WASHER	ﾜｯｼｬ	96	[ARL011][ARLE11][ARL012] [ARLE12]
-	02010-00008		WASHER	ﾜｯｼｬ	80	[ARL013][ARLE13][ARL014] [ARLE14]
-	02010-00008		WASHER	ﾜｯｼｬ	120	[ARL015][ARLE15][ARL016] [ARLE16]
-	02010-00008		WASHER	ﾜｯｼｬ	80	[ARL017][ARLE17][ARL018] [ARLE18]
-	02010-00008		WASHER	ﾜｯｼｬ	120	[ARL019][ARLE19][ARL020] [ARLE20]
-	02010-00008		WASHER	ﾜｯｼｬ	80	[ARL021][ARLE21][ARL022] [ARLE22]
-	02010-00008		WASHER	ﾜｯｼｬ	120	[ARL023][ARLE23][ARL024] [ARLE24]
-	02010-00008		WASHER	ﾜｯｼｬ	96	[ARL025][ARLE25][ARL026] [ARLE26]
-	02010-00008		WASHER	ﾜｯｼｬ	144	[ARL027][ARLE27][ARL028] [ARLE28]

FIG.44 LOAD GRAB

(A502LG10) **[LG2A4,LG2B4,LG2C4,LG2D4,LG2E4,LG2F4,LG2G4,LG2H4]**

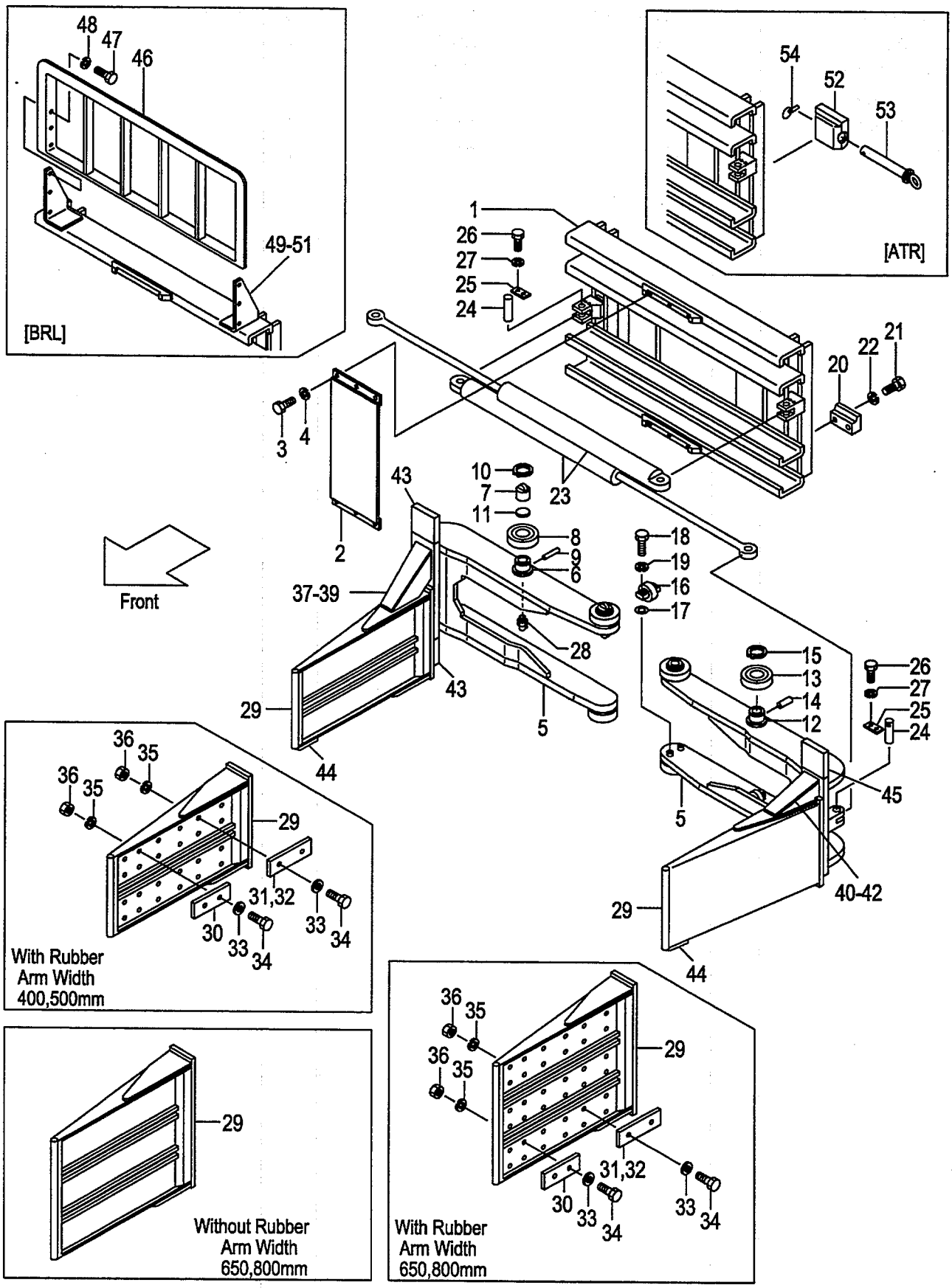

A:LG2A4(J) D:LG2D4(J) G:LG2G4(J)
B:LG2B4(J) E:LG2E4(J) H:LG2H4(J)
C:LG2C4(J) F:LG2F4(J)

FIG.44
(A502LG10)

Item No	Part No.	Mark	Description		Req'd	Remarks : Serial No.
-	02010-00008		WASHER	ﾜｯｼｬ	96	[ARL029][ARLE29][ARL030] [ARLE30]
-	02010-00008		WASHER	ﾜｯｼｬ	144	[ARL031][ARLE31][ARL032] [ARLE32]
-	02010-00008		WASHER	ﾜｯｼｬ	96	[ARL033][ARLE33][ARL034] [ARLE34]
-	02010-00008		WASHER	ﾜｯｼｬ	144	[ARL035][ARLE35][ARL036] [ARLE36]
36	01400-00008		NUT	ﾅｯﾄ	48	[ARL001][ARLE01][ARL002] [ARLE02]
-	01400-00008		NUT	ﾅｯﾄ	72	[ARL003][ARLE03][ARL004] [ARLE04]
-	01400-00008		NUT	ﾅｯﾄ	64	[ARL005][ARLE05][ARL006] [ARLE06]
-	01400-00008		NUT	ﾅｯﾄ	96	[ARL007][ARLE07][ARL008] [ARLE08]
-	01400-00008		NUT	ﾅｯﾄ	64	[ARL009][ARLE09][ARL010] [ARLE10]
-	01400-00008		NUT	ﾅｯﾄ	96	[ARL011][ARLE11][ARL012] [ARLE12]
-	01400-00008		NUT	ﾅｯﾄ	80	[ARL013][ARLE13][ARL014] [ARLE14]
-	01400-00008		NUT	ﾅｯﾄ	120	[ARL015][ARLE15][ARL016] [ARLE16]
-	01400-00008		NUT	ﾅｯﾄ	80	[ARL017][ARLE17][ARL018] [ARLE18]
-	01400-00008		NUT	ﾅｯﾄ	120	[ARL019][ARLE19][ARL020] [ARLE20]
-	01400-00008		NUT	ﾅｯﾄ	80	[ARL021][ARLE21][ARL022] [ARLE22]
-	01400-00008		NUT	ﾅｯﾄ	120	[ARL023][ARLE23][ARL024] [ARLE24]
-	01400-00008		NUT	ﾅｯﾄ	96	[ARL025][ARLE25][ARL026] [ARLE26]
-	01400-00008		NUT	ﾅｯﾄ	144	[ARL027][ARLE27][ARL028] [ARLE28]
-	01400-00008		NUT	ﾅｯﾄ	96	[ARL029][ARLE29][ARL030] [ARLE30]
-	01400-00008		NUT	ﾅｯﾄ	144	[ARL031][ARLE31][ARL032] [ARLE32]
-	01400-00008		NUT	ﾅｯﾄ	96	[ARL033][ARLE33][ARL034] [ARLE34]
-	01400-00008		NUT	ﾅｯﾄ	144	[ARL035][ARLE35][ARL036] [ARLE36]
37	62246-24541		PLATE	ﾌﾟﾚｰﾄ	1	[ARL001][ARL005][ARL009] [ARL013][ARL017][ARL021] [ARL025][ARL029][ARL033] [ARL037][ARL041][ARL045] [ARL049][ARL053][ARL057] [ARL061][ARL065][ARL069]

FIG.44 LOAD GRAB

(A502LG10) **[LG2A4,LG2B4,LG2C4,LG2D4,LG2E4,LG2F4,LG2G4,LG2H4]**

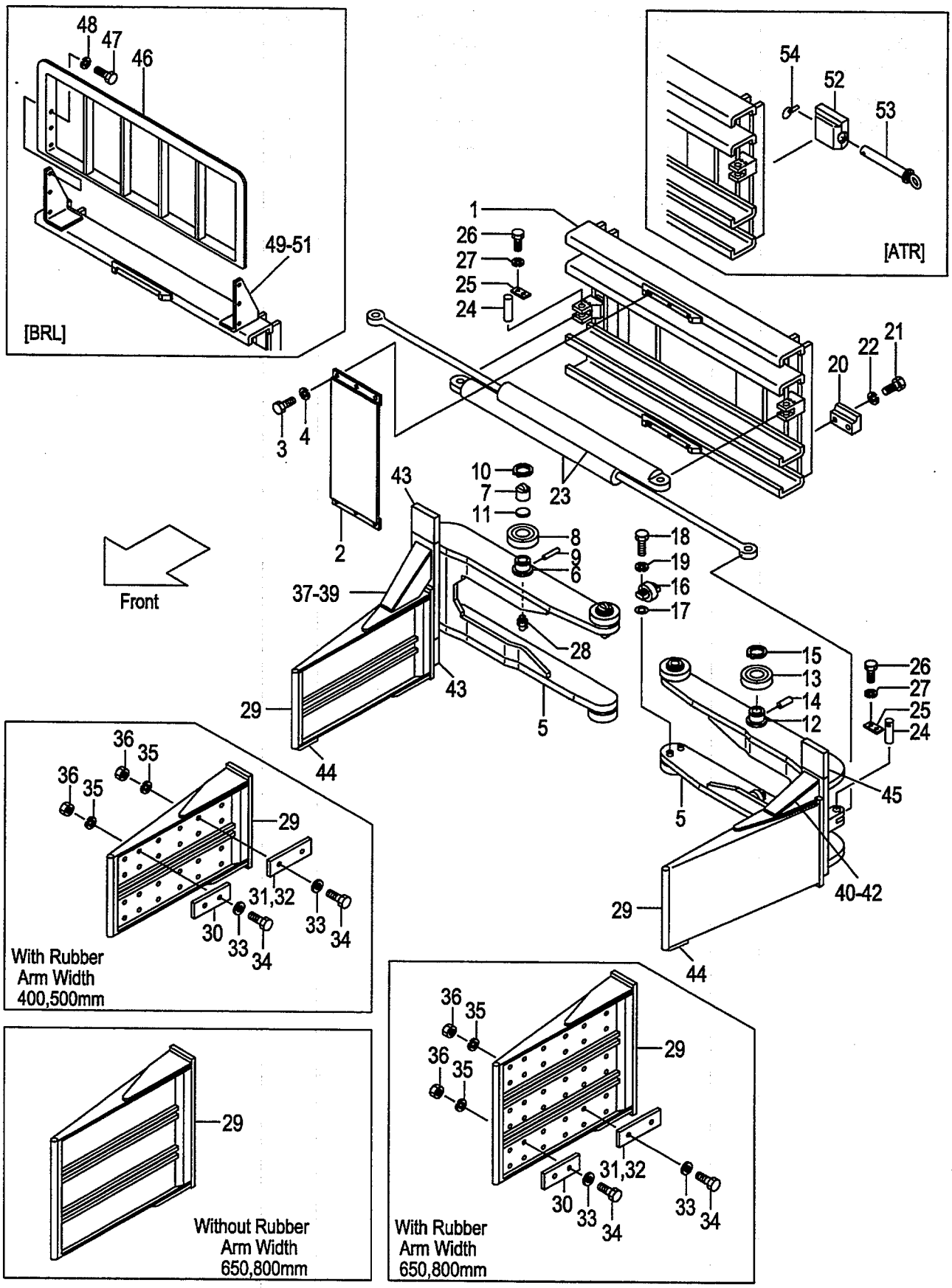

A:LG2A4(J) D:LG2D4(J) G:LG2G4(J)
B:LG2B4(J) E:LG2E4(J) H:LG2H4(J)
C:LG2C4(J) F:LG2F4(J)

FIG.44
(A502LG10)

Item No	Part No.	Mark	Description		Req'd	Remarks : Serial No.
-	62246-24101		PLATE	ﾌﾟﾚｰﾄ	1	[ARL002][ARL006][ARL010] [ARL014][ARL018][ARL022] [ARL026][ARL030][ARL034] [ARL038][ARL042][ARL046] [ARL050][ARL054][ARL058] [ARL062][ARL066][ARL070]
-	62246-24131		PLATE	ﾌﾟﾚｰﾄ	1	[ARLE01][ARLE05][ARLE09] [ARLE13][ARLE17][ARLE21] [ARLE25][ARLE29][ARLE33] [ARLE37][ARLE41][ARLE45] [ARLE49][ARLE53][ARLE57] [ARLE61][ARLE65][ARLE69]
-	62246-24561		PLATE	ﾌﾟﾚｰﾄ	1	[ARLE02][ARLE06][ARLE10] [ARLE14][ARLE18][ARLE22] [ARLE26][ARLE30][ARLE34] [ARLE38][ARLE42][ARLE46] [ARLE50][ARLE54][ARLE58] [ARLE62][ARLE66][ARLE70]
38	62246-24551		PLATE	ﾌﾟﾚｰﾄ	1	[ARL001][ARL005][ARL009] [ARL013][ARL017][ARL021] [ARL025][ARL029][ARL033] [ARL037][ARL041][ARL045] [ARL049][ARL053][ARL057] [ARL061][ARL065][ARL069]
-	62246-24111		PLATE	ﾌﾟﾚｰﾄ	1	[ARL002][ARL006][ARL010] [ARL014][ARL018][ARL022] [ARL026][ARL030][ARL034] [ARL038][ARL042][ARL046] [ARL050][ARL054][ARL058] [ARL062][ARL066][ARL070]
-	62246-24141		PLATE	ﾌﾟﾚｰﾄ	1	[ARLE01][ARLE05][ARLE09] [ARLE13][ARLE17][ARLE21] [ARLE25][ARLE29][ARLE33] [ARLE37][ARLE41][ARLE45] [ARLE49][ARLE53][ARLE57] [ARLE61][ARLE65][ARLE69]
-	62246-24551		PLATE	ﾌﾟﾚｰﾄ	1	[ARLE02][ARLE06][ARLE10] [ARLE14][ARLE18][ARLE22] [ARLE26][ARLE30][ARLE34] [ARLE38][ARLE42][ARLE46] [ARLE50][ARLE54][ARLE58] [ARLE62][ARLE66][ARLE70]
39	62246-24561		PLATE	ﾌﾟﾚｰﾄ	1	[ARL001][ARL005][ARL009] [ARL013][ARL017][ARL021] [ARL025][ARL029][ARL033] [ARL037][ARL041][ARL045] [ARL049][ARL053][ARL057] [ARL061][ARL065][ARL069]
-	62246-24121		PLATE	ﾌﾟﾚｰﾄ	1	[ARL002][ARL006][ARL010] [ARL014][ARL018][ARL022]

FIG.44 LOAD GRAB

(A502LG10) **[LG2A4,LG2B4,LG2C4,LG2D4,LG2E4,LG2F4,LG2G4,LG2H4]**

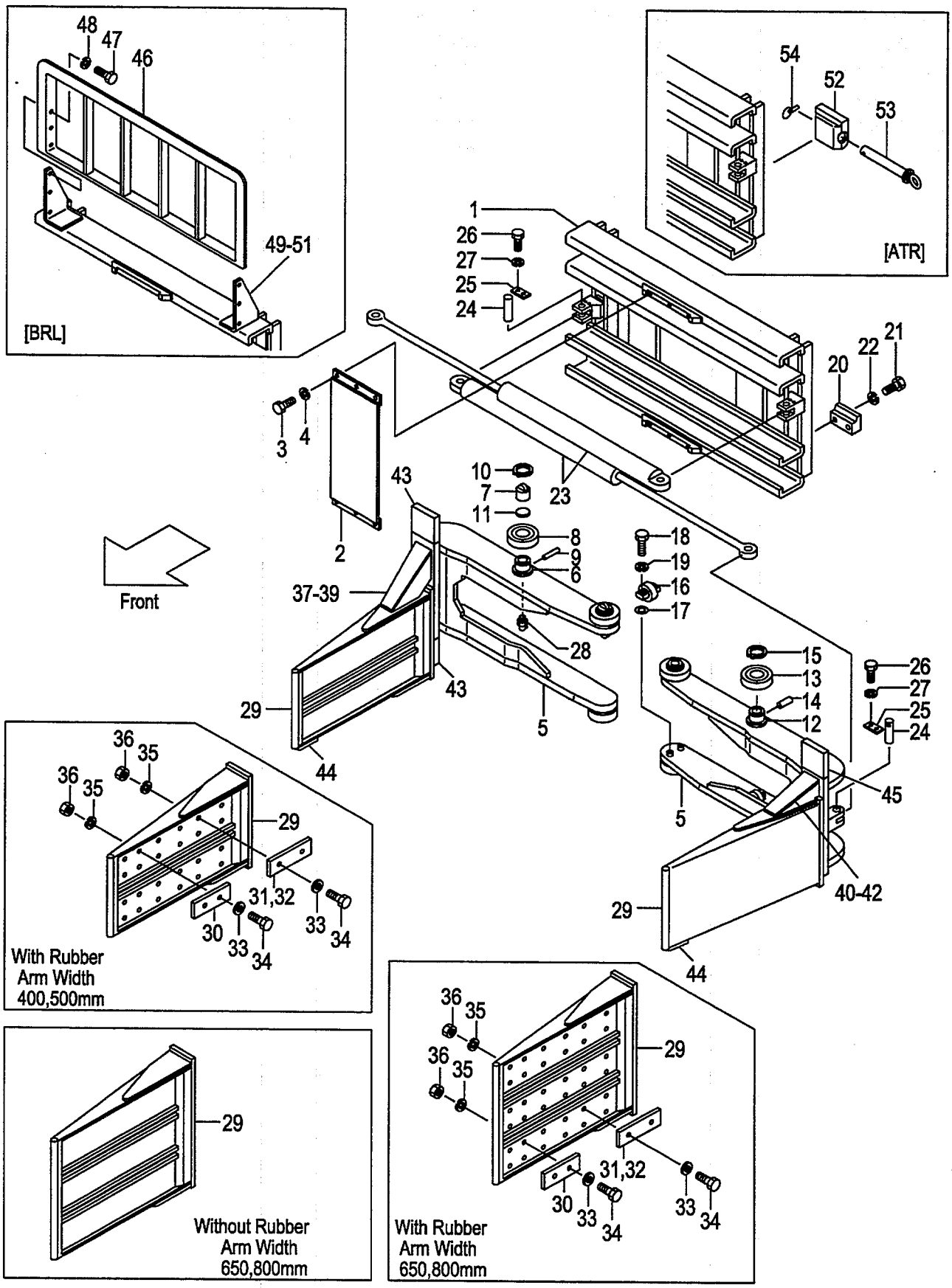

A:LG2A4(J) D:LG2D4(J) G:LG2G4(J)
B:LG2B4(J) E:LG2E4(J) H:LG2H4(J)
C:LG2C4(J) F:LG2F4(J)

FIG.44
(A502LG10)

Item No	Part No.	Mark	Description	Req'd	Remarks : Serial No.
					[ARL026][ARL030][ARL034]
					[ARL038][ARL042][ARL046]
					[ARL050][ARL054][ARL058]
					[ARL062][ARL066][ARL070]
-	62246-24151		PLATE プレート	1	[ARLE01][ARLE05][ARLE09]
					[ARLE13][ARLE17][ARLE21]
					[ARLE25][ARLE29][ARLE33]
					[ARLE37][ARLE41][ARLE45]
					[ARLE49][ARLE53][ARLE57]
					[ARLE61][ARLE65][ARLE69]
-	62246-24541		PLATE プレート	1	[ARLE02][ARLE06][ARLE10]
					[ARLE14][ARLE18][ARLE22]
					[ARLE26][ARLE30][ARLE34]
					[ARLE38][ARLE42][ARLE46]
					[ARLE50][ARLE54][ARLE58]
					[ARLE62][ARLE66][ARLE70]
40	62246-24101		PLATE プレート	1	[ARL001][ARL005][ARL009]
					[ARL013][ARL017][ARL021]
					[ARL025][ARL029][ARL033]
					[ARL037][ARL041][ARL045]
					[ARL049][ARL053][ARL057]
					[ARL061][ARL065][ARL069]
					[ARLE01][ARLE05][ARLE09]
					[ARLE13][ARLE17][ARLE21]
					[ARLE25][ARLE29][ARLE33]
					[ARLE37][ARLE41][ARLE45]
					[ARLE49][ARLE53][ARLE57]
					[ARLE61][ARLE65][ARLE69]
41	62246-24111		PLATE プレート	1	[ARL001][ARL005][ARL009]
					[ARL013][ARL017][ARL021]
					[ARL025][ARL029][ARL033]
					[ARL037][ARL041][ARL045]
					[ARL049][ARL053][ARL057]
					[ARL061][ARL065][ARL069]
					[ARLE01][ARLE05][ARLE09]
					[ARLE13][ARLE17][ARLE21]
					[ARLE25][ARLE29][ARLE33]
					[ARLE37][ARLE41][ARLE45]
					[ARLE49][ARLE53][ARLE57]
					[ARLE61][ARLE65][ARLE69]
42	62246-24121		PLATE プレート	1	[ARL001][ARL005][ARL009]
					[ARL013][ARL017][ARL021]
					[ARL025][ARL029][ARL033]
					[ARL037][ARL041][ARL045]
					[ARL049][ARL053][ARL057]
					[ARL061][ARL065][ARL069]
					[ARLE01][ARLE05][ARLE09]
					[ARLE13][ARLE17][ARLE21]
					[ARLE25][ARLE29][ARLE33]
					[ARLE37][ARLE41][ARLE45]

FIG.44 LOAD GRAB

(A502LG10) **[LG2A4,LG2B4,LG2C4,LG2D4,LG2E4,LG2F4,LG2G4,LG2H4]**

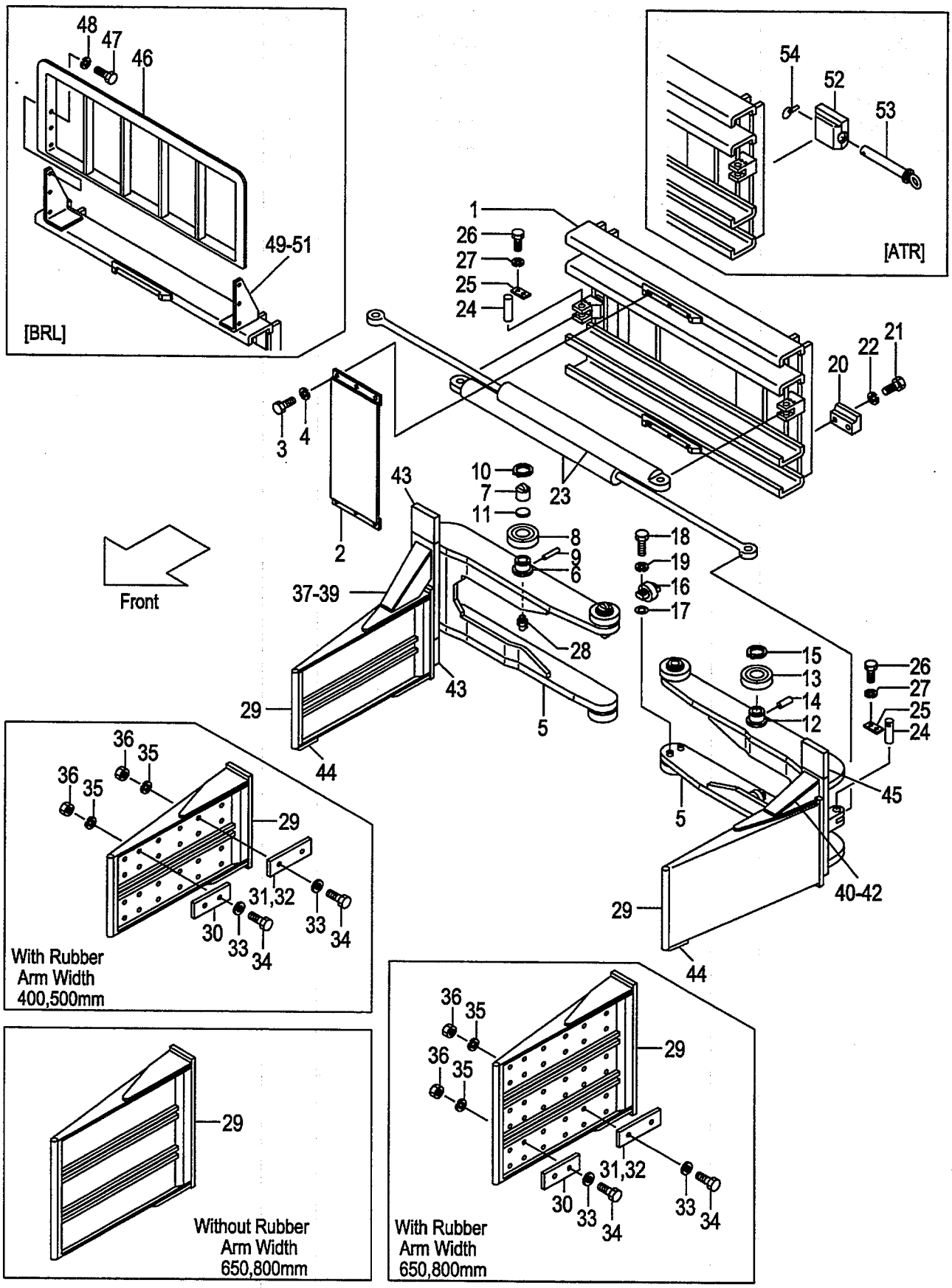

A:LG2A4(J) D:LG2D4(J) G:LG2G4(J)
B:LG2B4(J) E:LG2E4(J) H:LG2H4(J)
C:LG2C4(J) F:LG2F4(J)

FIG.44
(A502LG10)

Item No	Part No.	Mark	Description		Req'd	Remarks : Serial No.
						[ARLE49][ARLE53][ARLE57]
						[ARLE61][ARLE65][ARLE69]
43	62246-24521		PLATE,LOWER,RH	ﾌﾟﾚｰﾄ	1	[ARLE01-ARLE72]
-	62246-24521		PLATE,UPPER,RH	ﾌﾟﾚｰﾄ	1	[ARLE04][ARLE08][ARLE12]
						[ARLE16][ARLE20][ARLE24]
						[ARLE28][ARLE32][ARLE36]
						[ARLE40][ARLE44][ARLE48]
						[ARLE52][ARLE56][ARLE60]
						[ARLE64][ARLE68][ARLE72]
						[ARL004][ARL008][ARL012]
						[ARL016][ARL020][ARL024]
						[ARL028][ARL032][ARL036]
						[ARL040][ARL044][ARL048]
						[ARL052][ARL056][ARL060]
						[ARL064][ARL068][ARL072]
44	62246-24531		PLATE	ﾌﾟﾚｰﾄ	2	[ARLE01-ARLE72]
45	62246-24521		PLATE,LOWER,LH	ﾌﾟﾚｰﾄ	1	[ARL003][ARL007][ARL011]
						[ARL015][ARL019][ARL023]
						[ARL027][ARL031][ARL035]
						[ARL039][ARL043][ARL047]
						[ARL051][ARL055][ARL059]
						[ARL063][ARL067][ARL071]
						[ARL004][ARL008][ARL012]
						[ARL016][ARL020][ARL024]
						[ARL028][ARL032][ARL036]
						[ARL040][ARL044][ARL048]
						[ARL052][ARL056][ARL060]
						[ARL064][ARL068][ARL072]
						[ARLE04][ARLE08][ARLE12]
						[ARLE16][ARLE20][ARLE24]
						[ARLE28][ARLE32][ARLE36]
						[ARLE40][ARLE44][ARLE48]
						[ARLE52][ARLE56][ARLE60]
						[ARLE64][ARLE68][ARLE72]
46	62246-20801		REST,BACK	ﾊﾞｯｸﾚｽﾄ	1	[BRL120]
-	62246-20811		REST,BACK	ﾊﾞｯｸﾚｽﾄ	1	B,C,D,F,G,H
						[BRL130]
-	62246-20821		REST,BACK	ﾊﾞｯｸﾚｽﾄ	1	C,D,G,H
						[BRL140]
-	62246-20831		REST,BACK	ﾊﾞｯｸﾚｽﾄ	1	D,H
						[BRL150]
47	01103-12025		BOLT	ﾎﾞﾙﾄ	6	[BRL]
48	02011-00012		WASHER	ﾜｯｼｬ	6	[BRL]
49	63146-22801		PLATE,TAPPED	ﾌﾟﾚｰﾄ	2	[BRL]
50	62246-23881		BRACKET	ﾌﾞﾗｹｯﾄ	1	[BRL]
51	62246-23891		BRACKET	ﾌﾞﾗｹｯﾄ	1	[BRL]
52	62039-12682		GUIDE	ｶﾞｲﾄﾞ	2	[ATR]
53	62039-12691		PIN	ﾋﾟﾝ	2	[ATR]
54	62039-12751		PIN	ﾋﾟﾝ	2	[ATR]
55	62039-12641	+	BRACKET	ﾌﾞﾗｹｯﾄ	4	[ATR]

FIG.44 LOAD GRAB

(A502LG10) **[LG2A4,LG2B4,LG2C4,LG2D4,LG2E4,LG2F4,LG2G4,LG2H4]**

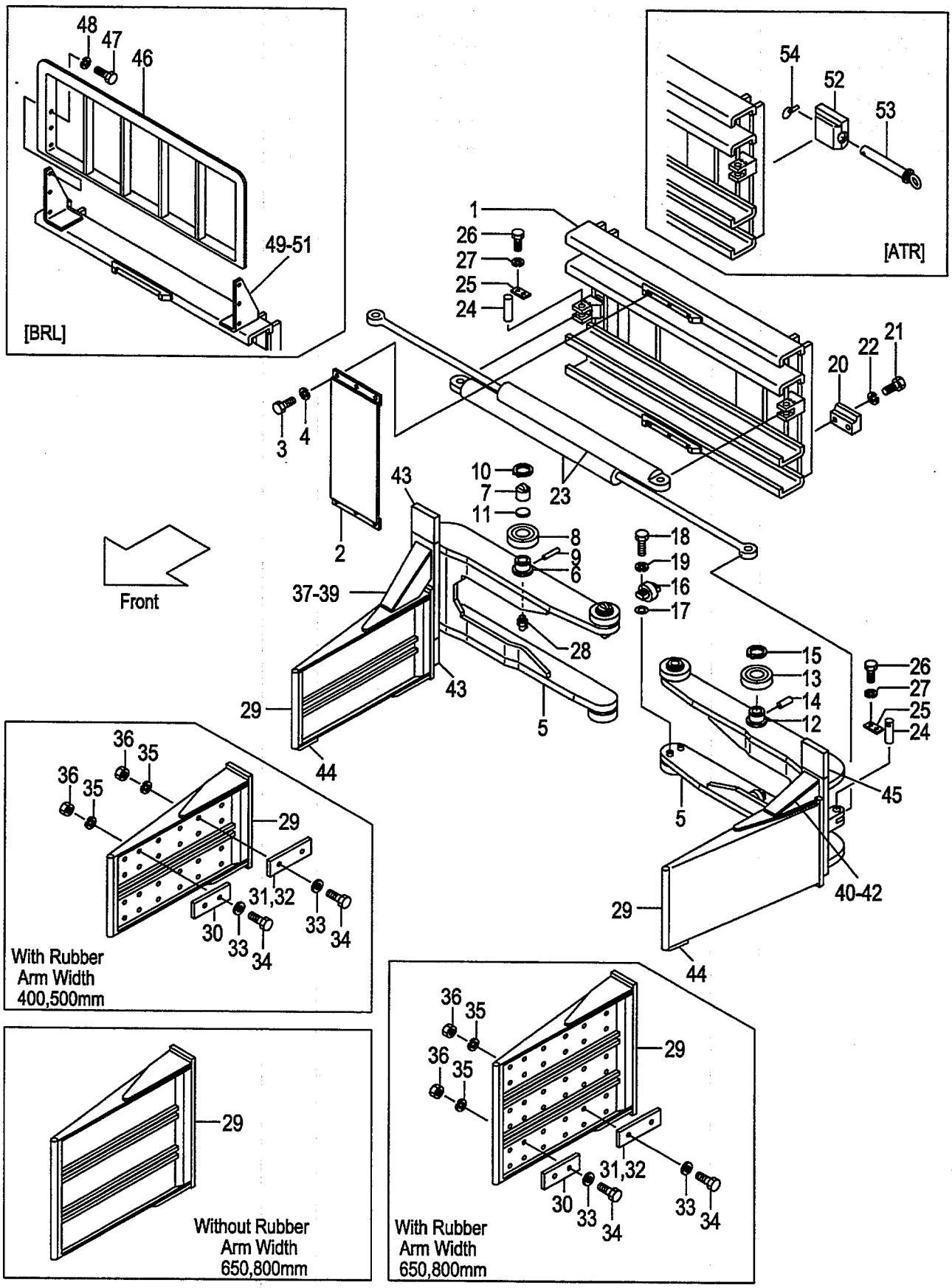

Item No	Part No.	Mark	Description		Req'd	Remarks : Serial No.
56	63130-26160	+	VALVE,RELIEF	ﾊﾞﾙﾌﾞ	1	[ARL021-ARL024]
						[ARL026-ARL028]
						[ARL057-ARL060]
						[ARLE21-ARLE24]
						[ARLE26-ARLE28]
						[ARLE57-ARLE60]
						[ARL062-ARL064]
						[ARLE62-ARLE64]
-	63130-26145	+	VALVE,RELIEF	ﾊﾞﾙﾌﾞ	1	[ARL025][ARLE025]
						[ARL029-ARL032][ARL061]
						[ARL065-ARL068]
						[ARLE29-ARLE32][ARLE61]
						[ARLE65-ARLE68]
-	63130-26130	+	VALVE,RELIEF	ﾊﾞﾙﾌﾞ	1	[ARL033-ARL036]
						[ARL069-ARL072]
						[ARLE33-ARLE36]
						[ARLE69-ARLE72]
57	63110-18901	+	CHART,LOAD	ﾁｬｰﾄ	1	
-	514A3-82301	+	CHART,LOAD	ﾁｬｰﾄ	1	[EXB/ENGLISH][EXC/ENGLISH]
-	514A3-82301	+	CHART,LOAD	ﾁｬｰﾄ	1	[EXE/ENGLISH][EXN/ENGLISH]
-	63110-18911	+	CHART,LOAD	ﾁｬｰﾄ	1	[EXA/ENGLISH]
-	524T3-84031	+	CHART,LOAD	ﾁｬｰﾄ	1	(RUSSIAN)
-	63110-18921	+	CHART,LOAD	ﾁｬｰﾄ	1	(CHINESE)
-	514A3-82321	+	CHART,LOAD	ﾁｬｰﾄ	1	(GERMAN)
-	514A3-82341	+	CHART,LOAD	ﾁｬｰﾄ	1	(FRENCH)
-	514A3-82331	+	CHART,LOAD	ﾁｬｰﾄ	1	(SPANISH)
-	514A3-82361	+	CHART,LOAD	ﾁｬｰﾄ	1	(DANISH)
-	514A3-82381	+	CHART,LOAD	ﾁｬｰﾄ	1	(GREEK)
-	514A3-82371	+	CHART,LOAD	ﾁｬｰﾄ	1	(ITALIAN)
-	514A3-82351	+	CHART,LOAD	ﾁｬｰﾄ	1	(DUTCH)
-	514A3-82391	+	CHART,LOAD	ﾁｬｰﾄ	1	(PORTUGUESE)
58	02432-01008	+	RIVET	ﾘﾍﾞｯﾄ	4	
59	09210-10300	+	PLATE,NAME	ﾌﾟﾚｰﾄ	1	
-	63110-19201	+	PLATE,NAME	ﾌﾟﾚｰﾄ	1	(ENGLISH)
-	63110-32111	+	PLATE,NAME	ﾌﾟﾚｰﾄ	1	(RUSSIAN)
-	09201-06201	+	PLATE,NAME	ﾌﾟﾚｰﾄ	1	(CHINESE)
-	63110-19221	+	PLATE,NAME	ﾌﾟﾚｰﾄ	1	(GERMAN)
-	63110-19261	+	PLATE,NAME	ﾌﾟﾚｰﾄ	1	(FRENCH)
-	63110-19241	+	PLATE,NAME	ﾌﾟﾚｰﾄ	1	(SPANISH)
-	63110-19301	+	PLATE,NAME	ﾌﾟﾚｰﾄ	1	(DANISH)
-	63110-19341	+	PLATE,NAME	ﾌﾟﾚｰﾄ	1	(GREEK)
-	63110-19321	+	PLATE,NAME	ﾌﾟﾚｰﾄ	1	(ITALIAN)
-	63110-19281	+	PLATE,NAME	ﾌﾟﾚｰﾄ	1	(DUTCH)
-	63110-19361	+	PLATE,NAME	ﾌﾟﾚｰﾄ	1	(PORTUGUESE)
60	62246-27001	+	PLATE,CAUTION	ﾌﾟﾚｰﾄ	1	
-	63110-18521	+	PLATE,CAUTION	ﾌﾟﾚｰﾄ	1	(ENGLISH)
-	63110-32121	+	PLATE,CAUTION	ﾌﾟﾚｰﾄ	1	(RUSSIAN)
-	63110-18511	+	PLATE,CAUTION	ﾌﾟﾚｰﾄ	1	(CHINESE)
-	63110-19371	+	PLATE,CAUTION	ﾌﾟﾚｰﾄ	1	(GERMAN)
-	63110-19391	+	PLATE,CAUTION	ﾌﾟﾚｰﾄ	1	(FRENCH)

FIG.44 LOAD GRAB

(A502LG10) **[LG2A4,LG2B4,LG2C4,LG2D4,LG2E4,LG2F4,LG2G4,LG2H4]**

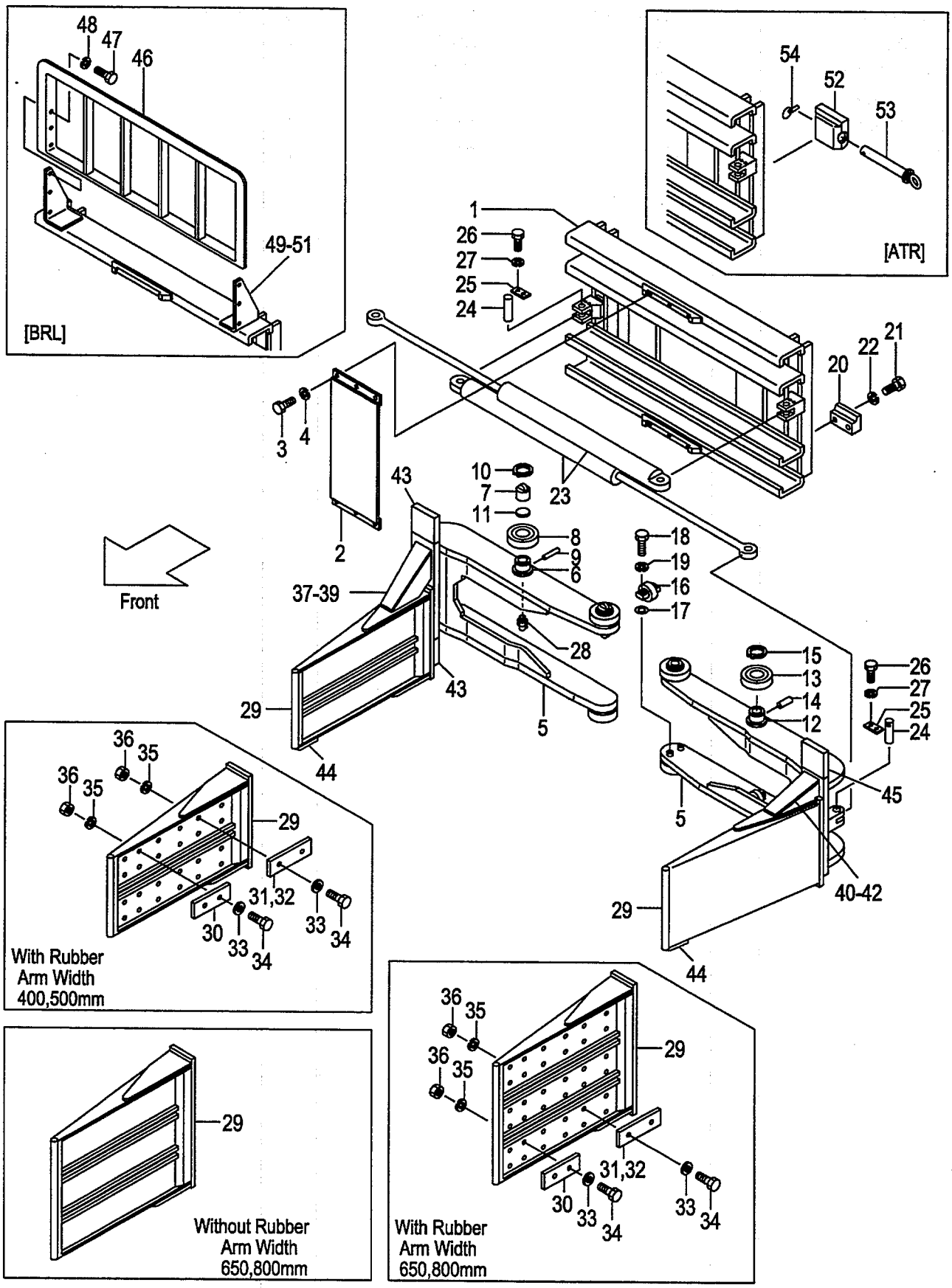

A:LG2A4(J) D:LG2D4(J) G:LG2G4(J)
B:LG2B4(J) E:LG2E4(J) H:LG2H4(J)
C:LG2C4(J) F:LG2F4(J)

FIG.44
(A502LG10)

Item No	Part No.	Mark	Description		Req'd	Remarks : Serial No.
-	63110-19411	+	PLATE,CAUTION	ﾌﾟﾚｰﾄ	1	(SPANISH)
-	63110-19381	+	PLATE,CAUTION	ﾌﾟﾚｰﾄ	1	(DANISH)
-	63110-19441	+	PLATE,CAUTION	ﾌﾟﾚｰﾄ	1	(GREEK)
-	63110-19431	+	PLATE,CAUTION	ﾌﾟﾚｰﾄ	1	(ITALIAN)
-	63110-19401	+	PLATE,CAUTION	ﾌﾟﾚｰﾄ	1	(DUTCH)
-	63110-19421	+	PLATE,CAUTION	ﾌﾟﾚｰﾄ	1	(PORTUGUESE)
61	63110-19151	+	PLATE,CAUTION	ﾌﾟﾚｰﾄ	1	[4DK]
62	63110-19921	+	DECAL	ﾃﾞｶﾙ	1	
63	63110-19131	+	KNOB	ﾉﾌﾞ	2	
64	63110-19931	+	DECAL	ﾃﾞｶﾙ	1	
65	63130-26011	+	SECTION,PLUNGER	ｾｸｼｮﾝ	1	
66	27419-12072	+	DECAL,CAUTION	ﾃﾞｶﾙ	1	

FIG.45 CYLINDER

(A502LG20) **[LG2A4,LG2B4,LG2C4,LG2D4,LG2E4,LG2F4,LG2G4,LG2H4]**

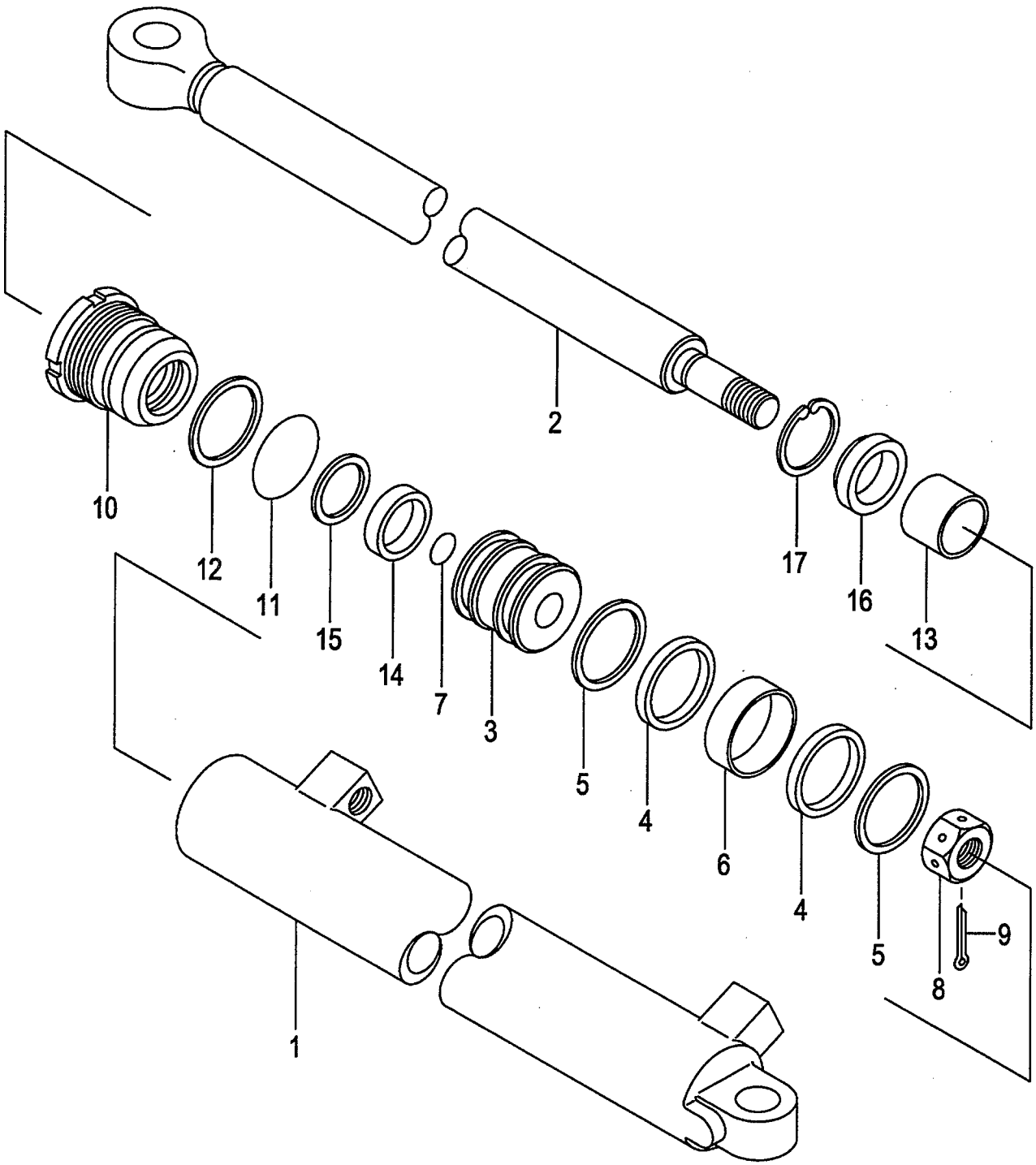

A:LG2A4(J) D:LG2D4(J) G:LG2G4(J)
B:LG2B4(J) E:LG2E4(J) H:LG2H4(J)
C:LG2C4(J) F:LG2F4(J)

FIG.45
(A502LG20)

Item No	Part No.	Mark	Description		Req'd	Remarks : Serial No.
A1	62036-20901		CYL-ASSY	ｼﾘﾝﾀﾞｱｯｾﾝ	2	A,E (STROKE:750) INC.1-17
-	62246-20901		CYL-ASSY	ｼﾘﾝﾀﾞｱｯｾﾝ	2	B,F (STROKE:800) INC.1-17
-	62246-20911		CYL-ASSY	ｼﾘﾝﾀﾞｱｯｾﾝ	2	C,G (STROKE:850) INC.1-17
-	62246-20921		CYL-ASSY	ｼﾘﾝﾀﾞｱｯｾﾝ	2	D,H (STROKE:900) INC.1-17
1	62036-20911		TUBE	ﾁｭｰﾌﾞ	2	A,E (STROKE:750)
-	63136-20911		TUBE	ﾁｭｰﾌﾞ	2	B,F (STROKE:800)
-	63136-21101		TUBE	ﾁｭｰﾌﾞ	2	C,G (STROKE:850)
-	63136-21111		TUBE	ﾁｭｰﾌﾞ	2	D,H (STROKE:900)
2	62036-20921		ROD,PISTON	ﾛｯﾄﾞ	2	A,E (STROKE:750)
-	62246-20951		ROD,PISTON	ﾛｯﾄﾞ	2	B,F (STROKE:800)
-	62246-20961		ROD,PISTON	ﾛｯﾄﾞ	2	C,G (STROKE:850)
-	62246-20971		ROD,PISTON	ﾛｯﾄﾞ	2	D,H (STROKE:900)
3	64536-12241		PISTON	ﾋﾟｽﾄﾝ	2	
4	22439-43711		PACKING	ﾊﾟｯｷﾝｸﾞ	4	
5	24238-42031		RING,BACK-UP	ﾘﾝｸﾞ	4	
6	23238-40141		WEARING	ｳｴｱﾘﾝｸﾞ	2	
7	03320-00200		O-RING	Oﾘﾝｸﾞ	2	
8	62036-22261		NUT	ﾅｯﾄ	2	
9	02200-05050		PIN,COTTER	ﾋﾟﾝ	2	
10	62036-23202		CAP	ｷｬｯﾌﾟ	2	
11	62036-23211		O-RING	Oﾘﾝｸﾞ	2	
12	62036-23221		RING,BACK-UP	ﾘﾝｸﾞ	2	
13	22198-42611		BUSH	ﾌﾞｯｼﾝｸﾞ	2	
14	NO PART NO.	#*	PACKING	ﾊﾟｯｷﾝｸﾞ	2	
15	NO PART NO.	#*	RING,BACK-UP	ﾘﾝｸﾞ	2	
16	23650-83581		SEAL,DUST	ｼｰﾙ	2	
17	22678-52101		RING,SNAP	ｽﾅｯﾌﾟﾘﾝｸﾞ	2	
K1	22438-59821		KIT,PACKING	ﾊﾟｯｷﾝｸﾞｷｯﾄ	2	INC.14,15

FIG.46 HYDRAULIC LINE (CONNECTOR-CYLINDER)

(A502LG30) ﾊｲﾄﾞﾛﾘｯｸﾗｲﾝ (ｺﾈｸﾀｰｼﾘﾝﾀﾞｰ)

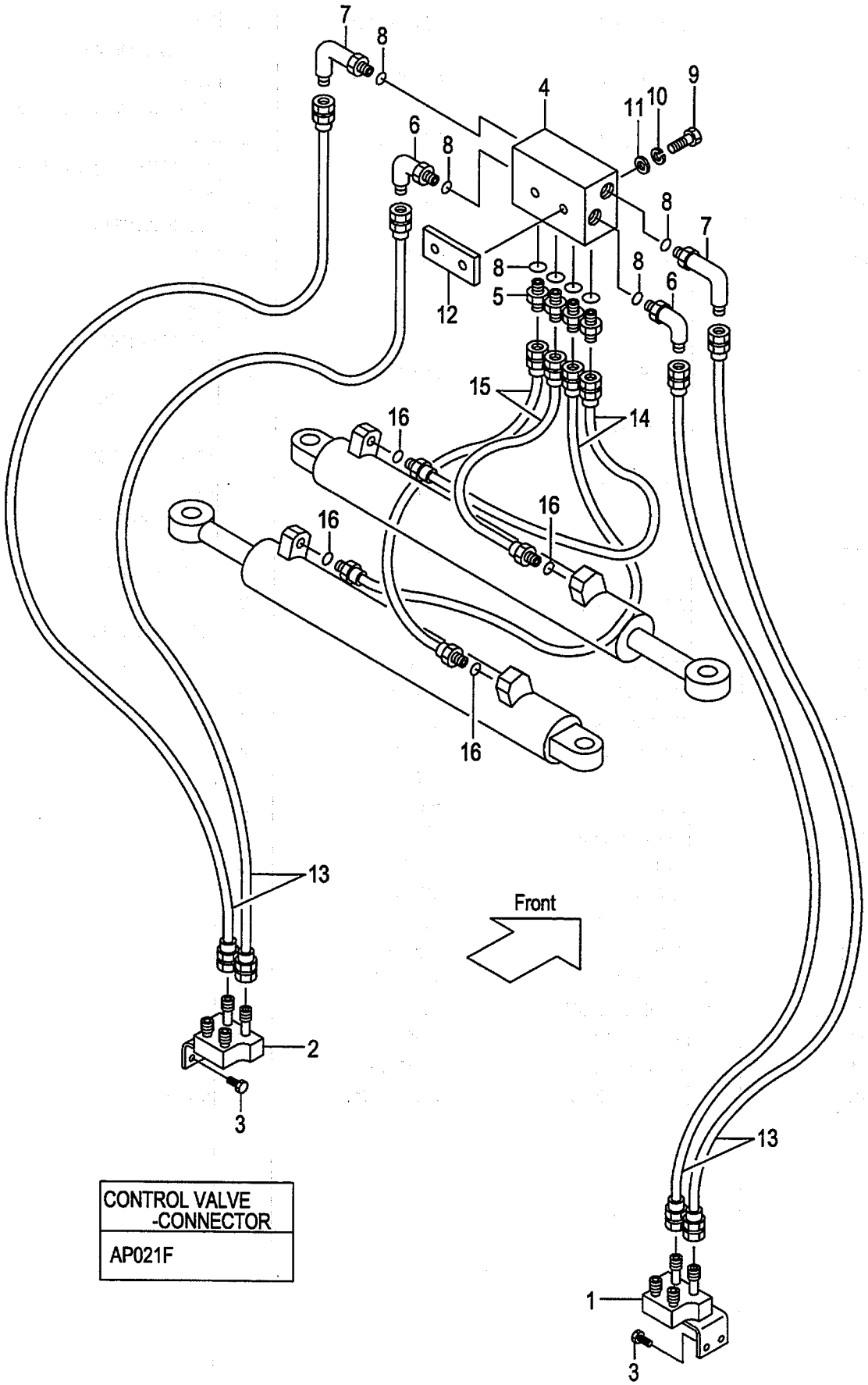

CONTROL VALVE -CONNECTOR
AP021F

A:LG2A4(J) D:LG2D4(J) G:LG2G4(J)
B:LG2B4(J) E:LG2E4(J) H:LG2H4(J)
C:LG2C4(J) F:LG2F4(J)

FIG.46
(A502LG30)

Item No	Part No.	Mark	Description		Req'd	Remarks : Serial No.
1	621F0-12001		STUD	ｽﾀｯﾄﾞ	1	
2	621F0-12011		STUD	ｽﾀｯﾄﾞ	1	
3	01184-10025		BOLT	ﾎﾞﾙﾄ	4	
4	63130-16432		VALVE,CHECK	ﾊﾞﾙﾌﾞ	1	
5	04134-00303		NIPPLE	ﾆｯﾌﾟﾙ	4	
6	04150-00303		ELBOW	ｴﾙﾎﾞ	2	
7	04150-10303		ELBOW	ｴﾙﾎﾞ	2	
8	03320-00140		O-RING	Oﾘﾝｸﾞ	8	
9	01100-08050		BOLT	ﾎﾞﾙﾄ	2	
10	02010-00008		WASHER	ﾜｯｼｬ	2	
11	02000-00008		WASHER	ﾜｯｼｬ	2	
12	62036-24502		PLATE	ﾌﾟﾚｰﾄ	1	
13	63130-21075		HOSE	ﾎｰｽ	4	
14	63130-22070		HOSE	ﾎｰｽ	2	
15	63130-22070		HOSE	ﾎｰｽ	2	A,E
-	63130-22075		HOSE	ﾎｰｽ	2	B,F
-	63130-22080		HOSE	ﾎｰｽ	2	C,G
-	63130-22085		HOSE	ﾎｰｽ	2	D,H
16	03320-00140		O-RING	Oﾘﾝｸﾞ	4	

FIG.47 HYDRAULIC LINE (CONNECTOR-CYLINDER)[4DK]

(A502LG40) ﾊｲﾄﾞﾛﾘｯｸﾗｲﾝ (ｺﾈｸﾀｰｼﾘﾝﾀﾞｰ)

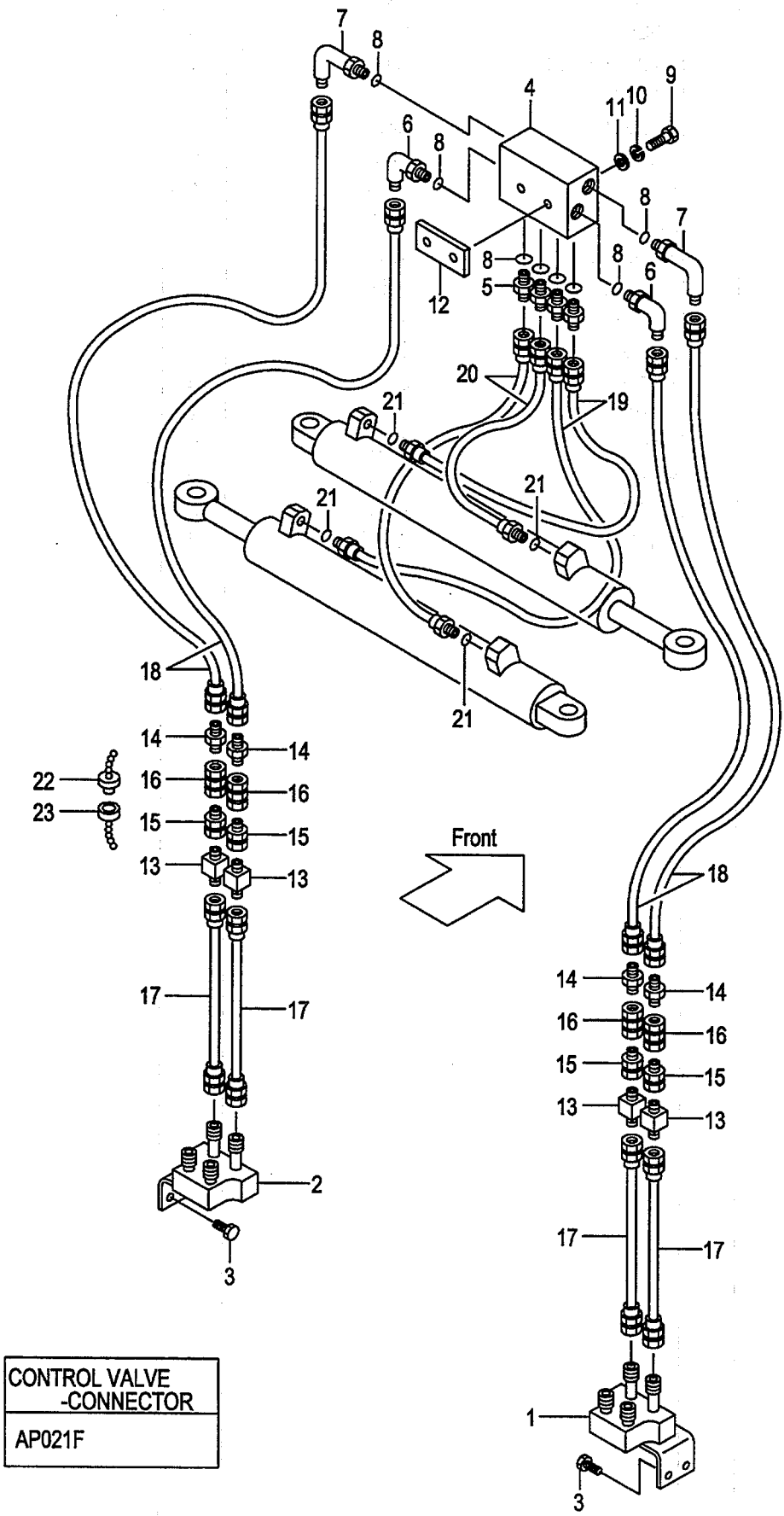

CONTROL VALVE -CONNECTOR
AP021F

A:LG2A4(J) D:LG2D4(J) G:LG2G4(J)
B:LG2B4(J) E:LG2E4(J) H:LG2H4(J)
C:LG2C4(J) F:LG2F4(J)

FIG.47
(A502LG40)

Item No	Part No.	Mark	Description		Req'd	Remarks : Serial No.
1	621F0-12001		STUD	ｽﾀｯﾄﾞ	1	[4DK]
2	621F0-12011		STUD	ｽﾀｯﾄﾞ	1	[4DK]
3	01184-10025		BOLT	ﾎﾞﾙﾄ	4	[4DK]
4	63130-16432		VALVE,CHECK	ﾊﾞﾙﾌﾞ	1	[4DK]
5	04134-00303		NIPPLE	ﾆｯﾌﾟﾙ	4	[4DK]
6	04150-00303		ELBOW	ｴﾙﾎﾞ	2	[4DK]
7	04150-10303		ELBOW	ｴﾙﾎﾞ	2	[4DK]
8	03320-00140		O-RING	Oﾘﾝｸﾞ	8	[4DK]
9	01100-08050		BOLT	ﾎﾞﾙﾄ	2	[4DK]
10	02010-00008		WASHER	ﾜｯｼｬ	2	[4DK]
11	02000-00008		WASHER	ﾜｯｼｬ	2	[4DK]
12	62036-24502		PLATE	ﾌﾟﾚｰﾄ	1	[4DK]
13	63110-18661		STUD	ｽﾀｯﾄﾞ	4	[4DK]
14	04137-00303		NIPPLE	ﾆｯﾌﾟﾙ	4	[4DK]
15	04138-00303		UNION	ﾕﾆｵﾝ	4	[4DK]
16	50226-29111		COUPLING,SELF-SEAL	ｶｯﾌﾟﾘﾝｸﾞ	4	[4DK]
17	63130-21030		HOSE	ﾎｰｽ	4	[4DK]
18	63130-21050		HOSE	ﾎｰｽ	4	[4DK]
19	63130-22070		HOSE	ﾎｰｽ	2	[4DK]
20	63130-22070		HOSE	ﾎｰｽ	2	A,E [4DK]
-	63130-22075		HOSE	ﾎｰｽ	2	B,F [4DK]
-	63130-22080		HOSE	ﾎｰｽ	2	C,G [4DK]
-	63130-22085		HOSE	ﾎｰｽ	2	D,H [4DK]
21	03320-00140		O-RING	Oﾘﾝｸﾞ	4	[4DK]
22	63130-14061		PLUG	ﾌﾟﾗｸﾞ	4	[4DK]
23	63130-14071		CAP	ｷｬｯﾌﾟ	4	[4DK]
24	621B0-12591	+	PLATE	ﾌﾟﾚｰﾄ	2	[4DK]
25	27132-40181	+	BAND	ﾊﾞﾝﾄﾞ	4	[4DK]
26	62036-23501	+	BAR	ﾊﾞｰ	1	[4DK]

FIG.48 HYDRAULIC LINE (CONNECTOR-CYLINDER)[ACC]

(A502LG50) ﾊｲﾄﾞﾛﾘｯｸﾗｲﾝ (ｺﾈｸﾀｰｼﾘﾝﾀﾞ)

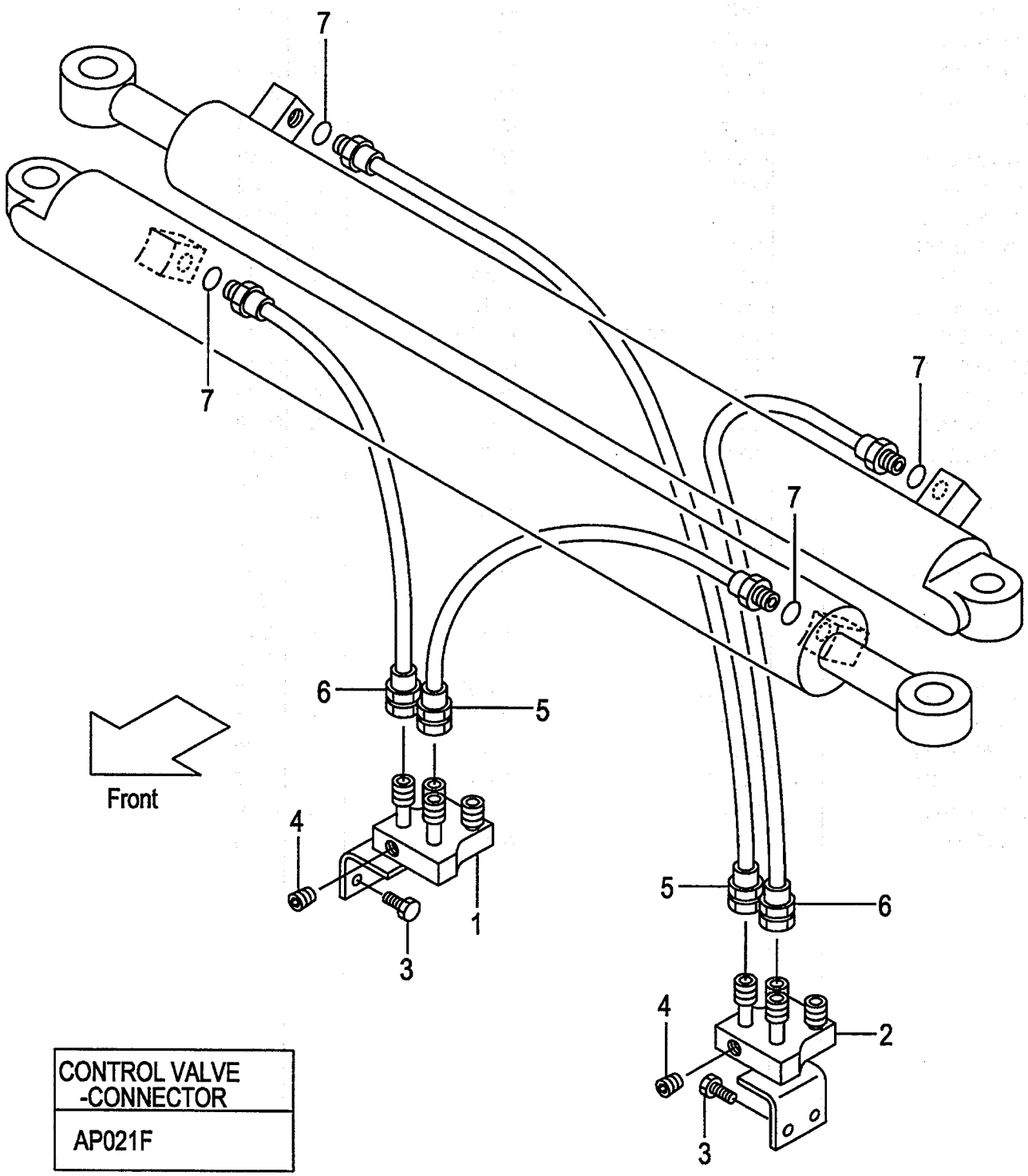

CONTROL VALVE -CONNECTOR
AP021F

A:LG2A4(J) D:LG2D4(J) G:LG2G4(J)
B:LG2B4(J) E:LG2E4(J) H:LG2H4(J)
C:LG2C4(J) F:LG2F4(J)

FIG.48
(A502LG50)

Item No	Part No.	Mark	Description		Req'd	Remarks : Serial No.
1	621F0-12081		STUD	ｽﾀｯﾄﾞ	1	[ACC]
2	621F0-12091		STUD	ｽﾀｯﾄﾞ	1	[ACC]
3	01184-10025		BOLT	ﾎﾞﾙﾄ	4	[ACC]
4	23870-52871		PLUG	ﾌﾟﾗｸﾞ	2	[ACC]
5	63130-22070		HOSE	ﾎｰｽ	2	[ACC]
6	63130-22070		HOSE	ﾎｰｽ	2	A,E [ACC]
-	63130-22075		HOSE	ﾎｰｽ	2	B,F [ACC]
-	63130-22080		HOSE	ﾎｰｽ	2	C,G [ACC]
-	63130-22085		HOSE	ﾎｰｽ	2	D,H [ACC]
7	03320-00140		O-RING	Oﾘﾝｸﾞ	4	[ACC]

FIG.49 HYDRAULIC LINE (CONNECTOR-CYLINDER)[ACC/4DK]

(A502LG60) ﾊｲﾄﾞﾛﾘｯｸﾗｲﾝ (ｺﾈｸﾀｰｼﾘﾝﾀﾞｰ)

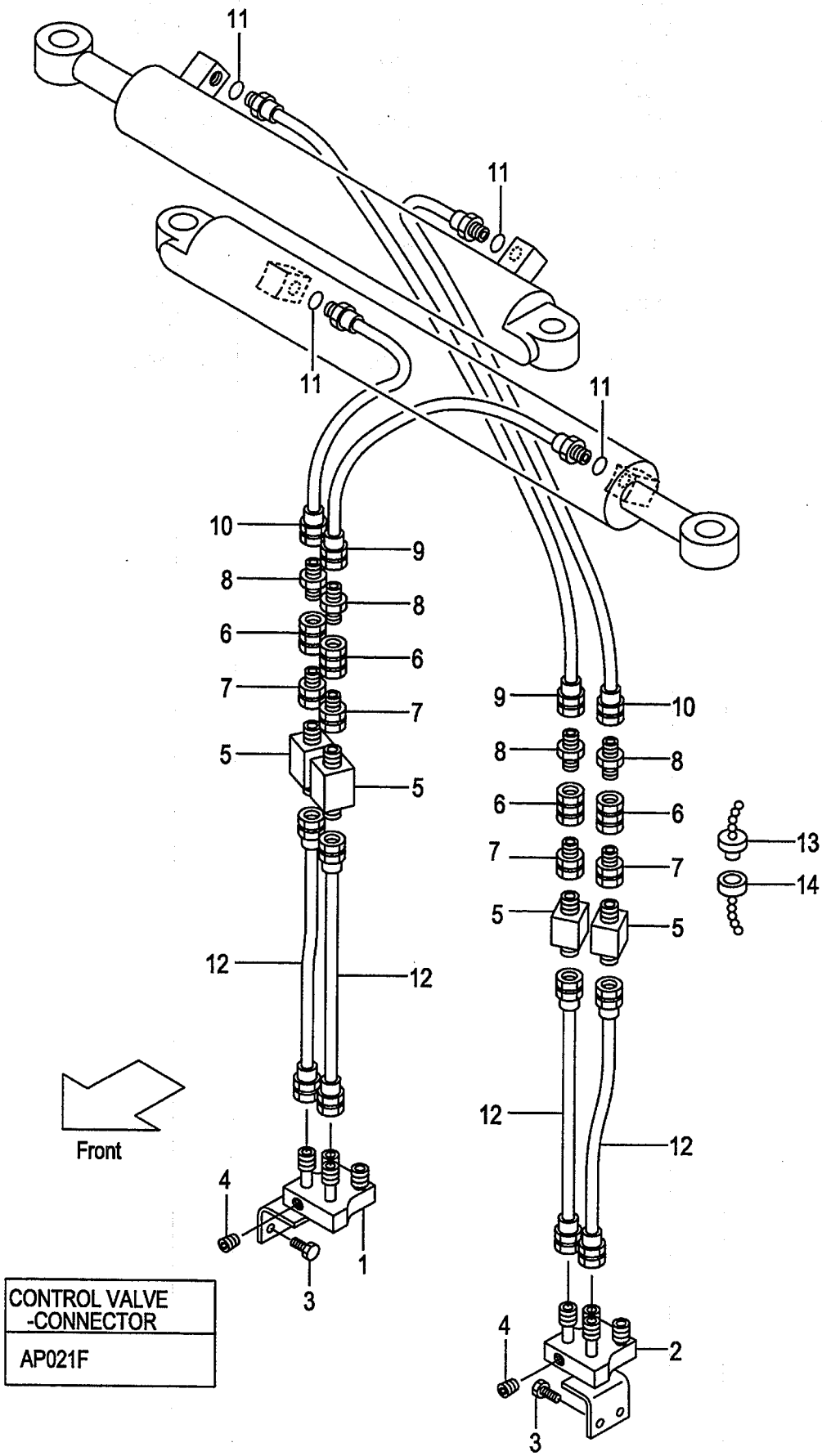

CONTROL VALVE -CONNECTOR
AP021F

A:LG2A4(J) D:LG2D4(J) G:LG2G4(J)
B:LG2B4(J) E:LG2E4(J) H:LG2H4(J)
C:LG2C4(J) F:LG2F4(J)

FIG.49
(A502LG60)

Item No	Part No.	Mark	Description		Req'd	Remarks : Serial No.
1	621F0-12081		STUD	ｽﾀｯﾄﾞ	1	[ACC/4DK]
2	621F0-12091		STUD	ｽﾀｯﾄﾞ	1	[ACC/4DK]
3	01184-10025		BOLT	ﾎﾞﾙﾄ	4	[ACC/4DK]
4	23870-52871		PLUG	ﾌﾟﾗｸﾞ	2	[ACC/4DK]
5	63110-18661		STUD	ｽﾀｯﾄﾞ	4	[ACC/4DK]
6	50226-29111		COUPLING	ｶｯﾌﾟﾘﾝｸﾞ	4	[ACC/4DK]
7	04138-00303		UNION	ﾕﾆｵﾝ	4	[ACC/4DK]
8	04137-00303		NIPPLE	ﾆｯﾌﾟﾙ	4	[ACC/4DK]
9	63130-22070		HOSE	ﾎｰｽ	2	[ACC/4DK]
10	63130-22070		HOSE	ﾎｰｽ	2	A,E [ACC/4DK]
-	63130-22075		HOSE	ﾎｰｽ	2	B,F [ACC/4DK]
-	63130-22080		HOSE	ﾎｰｽ	2	C,G [ACC/4DK]
-	63130-22085		HOSE	ﾎｰｽ	2	D,H [ACC/4DK]
11	03320-00140		O-RING	Oﾘﾝｸﾞ	4	[ACC/4DK]
12	63130-21030		HOSE	ﾎｰｽ	4	[ACC/4DK]
13	63130-14061		PLUG	ﾌﾟﾗｸﾞ	4	[ACC/4DK]
14	63130-14071		CAP	ｷｬｯﾌﾟ	4	[ACC/4DK]
15	621B0-12591	+	PLATE	ﾌﾟﾚｰﾄ	2	[ACC/4DK]
16	27132-40181	+	BAND	ﾊﾞﾝﾄﾞ	4	[ACC/4DK]
17	62036-23501	+	BAR	ﾊﾞｰ	1	[ACC/4DK]

FIG.50 HYDRAULIC LINE (CONNECTOR-CYLINDER)[SSV]

(A502LG70) ﾊｲﾄﾞﾛﾘｯｸﾗｲﾝ (ｺﾈｸﾀｰｼﾘﾝﾀﾞ)

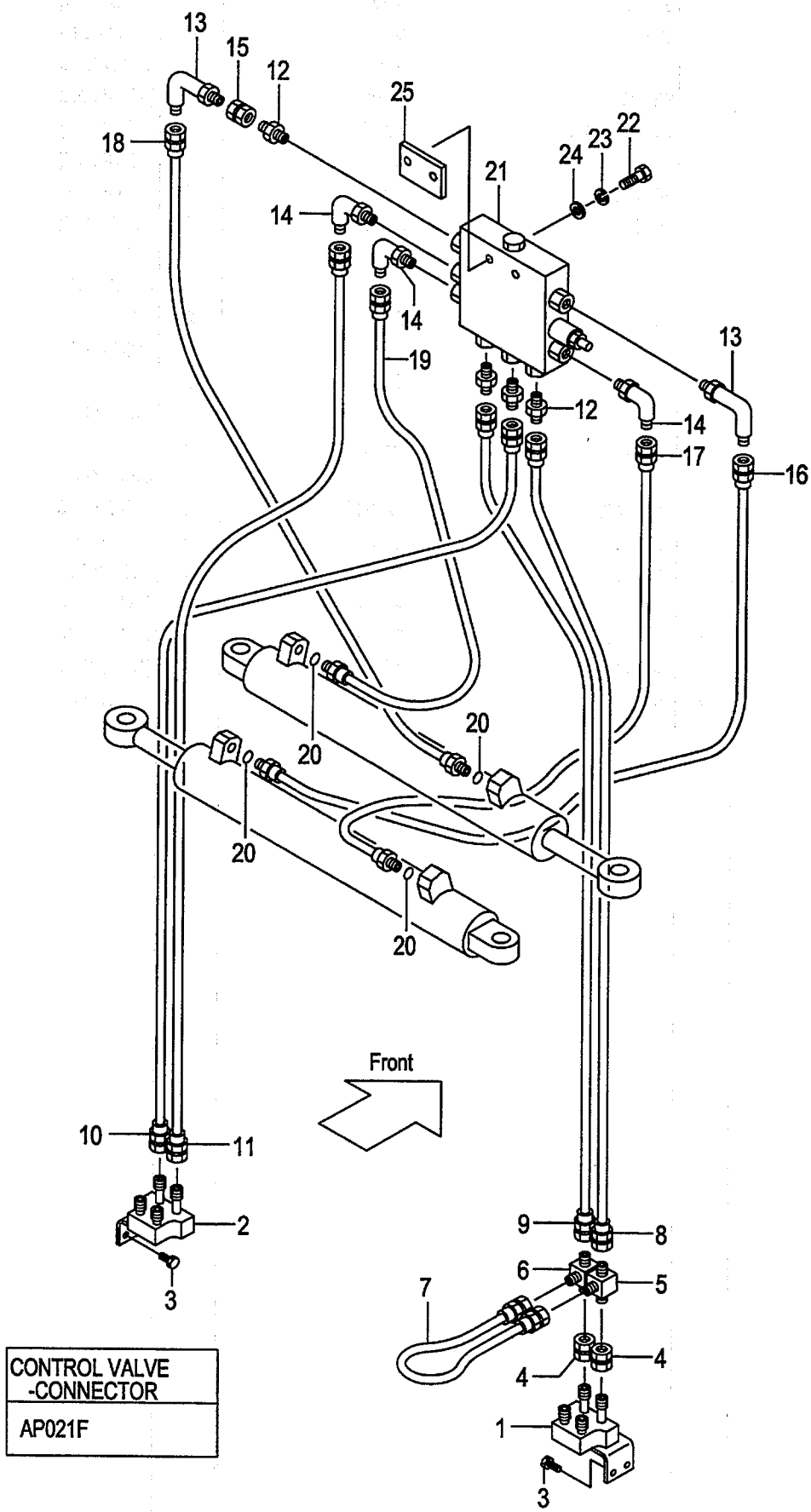

A:LG2A4(J) D:LG2D4(J) G:LG2G4(J)
B:LG2B4(J) E:LG2E4(J) H:LG2H4(J)
C:LG2C4(J) F:LG2F4(J)

FIG.50
(A502LG70)

Item No	Part No.	Mark	Description		Req'd	Remarks : Serial No.
1	621F0-12001		STUD	ｽﾀｯﾄﾞ	1	[SSV]
2	621F0-12011		STUD	ｽﾀｯﾄﾞ	1	[SSV]
3	01184-10025		BOLT	ﾎﾞﾙﾄ	4	[SSV]
4	63130-12711		UNION	ﾕﾆｵﾝ	2	[SSV]
5	63110-13121		THREE-WAY	ｽﾘｰｳｴｲ	1	[SSV]
6	63110-18601		THREE-WAY	ｽﾘｰｳｴｲ	1	[SSV]
7	63130-31033		HOSE	ﾎｰｽ	1	[SSV]
8	63130-21065		HOSE	ﾎｰｽ	1	[SSV]
9	63130-21070		HOSE	ﾎｰｽ	1	[SSV]
10	63130-21075		HOSE	ﾎｰｽ	1	[SSV]
11	63130-21070		HOSE	ﾎｰｽ	1	[SSV]
12	04137-00303		NIPPLE	ﾆｯﾌﾟﾙ	4	[SSV]
13	53110-12121		ELBOW	ｴﾙﾎﾞ	2	[SSV]
14	53110-12131		ELBOW	ｴﾙﾎﾞ	3	[SSV]
15	04139-00303		UNION	ﾕﾆｵﾝ	1	[SSV]
16	63130-22075		HOSE	ﾎｰｽ	1	[SSV]
17	63130-22075		HOSE	ﾎｰｽ	1	A,E [SSV]
-	63130-22080		HOSE	ﾎｰｽ	1	B,F [SSV]
-	63130-22085		HOSE	ﾎｰｽ	1	C,G [SSV]
-	63130-22090		HOSE	ﾎｰｽ	1	D,H [SSV]
18	63130-22075		HOSE	ﾎｰｽ	1	[SSV]
19	63130-22075		HOSE	ﾎｰｽ	1	A,E [SSV]
-	63130-22080		HOSE	ﾎｰｽ	1	B,F [SSV]
-	63130-22085		HOSE	ﾎｰｽ	1	C,G [SSV]
-	63130-22090		HOSE	ﾎｰｽ	1	D,H [SSV]
20	03320-00140		O-RING	Oﾘﾝｸﾞ	4	[SSV]
21	63130-12651		VALVE,SIDE-SHIFT	ﾊﾞﾙﾌﾞ	1	[SSV]
22	01100-08045		BOLT	ﾎﾞﾙﾄ	2	[SSV]
23	02000-00008		WASHER	ﾜｯｼｬ	2	[SSV]
24	02010-00008		WASHER	ﾜｯｼｬ	2	[SSV]
25	62246-24201		PLATE	ﾌﾟﾚｰﾄ	1	[SSV]

FIG.51 HYDRAULIC LINE (CONNECTOR-CYLINDER)[SSV/4DK]

(A502LG80) ﾊｲﾄﾞﾛﾘｯｸﾗｲﾝ (ｺﾈｸﾀｰｼﾘﾝﾀﾞ)

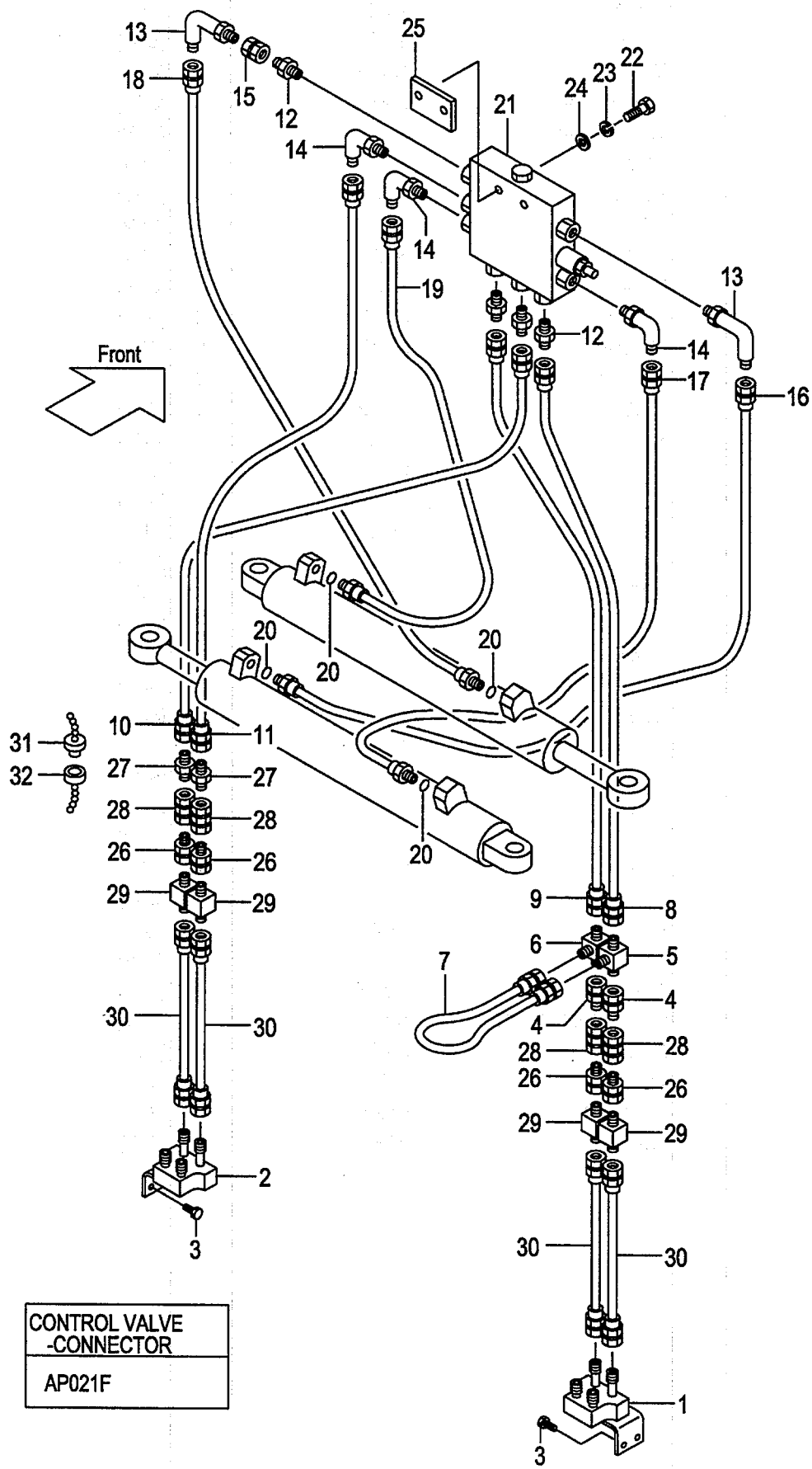

A:LG2A4(J) D:LG2D4(J) G:LG2G4(J)
B:LG2B4(J) E:LG2E4(J) H:LG2H4(J)
C:LG2C4(J) F:LG2F4(J)

FIG.51
(A502LG80)

Item No	Part No.	Mark	Description		Req'd	Remarks : Serial No.
1	621F0-12001		STUD	ｽﾀｯﾄﾞ	1	[SSV/4DK]
2	621F0-12011		STUD	ｽﾀｯﾄﾞ	1	[SSV/4DK]
3	01184-10025		BOLT	ﾎﾞﾙﾄ	4	[SSV/4DK]
4	63130-12711		UNION	ﾕﾆｵﾝ	2	[SSV/4DK]
5	63110-13121		THREE-WAY	ｽﾘｰｳｴｲ	1	[SSV/4DK]
6	63110-18601		THREE-WAY	ｽﾘｰｳｴｲ	1	[SSV/4DK]
7	63130-31033		HOSE	ﾎｰｽ	1	[SSV/4DK]
8	63130-21050		HOSE	ﾎｰｽ	1	[SSV/4DK]
9	63130-21055		HOSE	ﾎｰｽ	1	[SSV/4DK]
10	63130-21050		HOSE	ﾎｰｽ	1	[SSV/4DK]
11	63130-21065		HOSE	ﾎｰｽ	1	[SSV/4DK]
12	04137-00303		NIPPLE	ﾆｯﾌﾟﾙ	4	[SSV/4DK]
13	53110-12121		ELBOW	ｴﾙﾎﾞ	2	[SSV/4DK]
14	53110-12131		ELBOW	ｴﾙﾎﾞ	3	[SSV/4DK]
15	04139-00303		UNION	ﾕﾆｵﾝ	1	[SSV/4DK]
16	63130-22075		HOSE	ﾎｰｽ	1	[SSV/4DK]
17	63130-22075		HOSE	ﾎｰｽ	1	A,E [SSV/4DK]
-	63130-22080		HOSE	ﾎｰｽ	1	B,F [SSV/4DK]
-	63130-22085		HOSE	ﾎｰｽ	1	C,G [SSV/4DK]
-	63130-22090		HOSE	ﾎｰｽ	1	D,H [SSV/4DK]
18	63130-22075		HOSE	ﾎｰｽ	1	[SSV/4DK]
19	63130-22075		HOSE	ﾎｰｽ	1	A,E [SSV/4DK]
-	63130-22080		HOSE	ﾎｰｽ	1	B,F [SSV/4DK]
-	63130-22085		HOSE	ﾎｰｽ	1	C,G [SSV/4DK]
-	63130-22090		HOSE	ﾎｰｽ	1	D,H [SSV/4DK]
20	03320-00140		O-RING	Oﾘﾝｸﾞ	4	[SSV/4DK]
21	63130-12651		VALVE,SIDE-SHIFT	ﾊﾞﾙﾌﾞ	1	[SSV/4DK]
22	01100-08045		BOLT	ﾎﾞﾙﾄ	2	[SSV/4DK]
23	02000-00008		WASHER	ﾜｯｼｬ	2	[SSV/4DK]
24	02010-00008		WASHER	ﾜｯｼｬ	2	[SSV/4DK]
25	62246-24201		PLATE	ﾌﾟﾚｰﾄ	1	[SSV/4DK]
26	04138-00303		UNION	ﾕﾆｵﾝ	4	[SSV/4DK]
27	04137-00303		NIPPLE	ﾆｯﾌﾟﾙ	2	[SSV/4DK]
28	50226-29111		COUPLING	ｶｯﾌﾟﾘﾝｸﾞ	4	[SSV/4DK]
29	63110-18661		STUD	ｽﾀｯﾄﾞ	4	[SSV/4DK]
30	63130-21030		HOSE	ﾎｰｽ	4	[SSV/4DK]
31	63130-14061		PLUG	ﾌﾟﾗｸﾞ	4	[SSV/4DK]
32	63130-14071		CAP	ｷｬｯﾌﾟ	4	[SSV/4DK]
33	621B0-12591	+	PLATE	ﾌﾟﾚｰﾄ	2	[SSV/4DK]
34	27132-40181	+	BAND	ﾊﾞﾝﾄﾞ	4	[SSV/4DK]
35	62036-82251	+	PLATE	ﾌﾟﾚｰﾄ	2	[SSV/4DK]
36	62036-23501	+	BAR	ﾊﾞｰ	1	[SSV/4DK]

FIG.52 HYDRAULIC LINE (CONNECTOR-CYLINDER)[VFM,VFHM]

(A502LG90) ﾊｲﾄﾞﾛﾘｯｸﾗｲﾝ (ｺﾈｸﾀｰｼﾘﾝﾀﾞｰ)

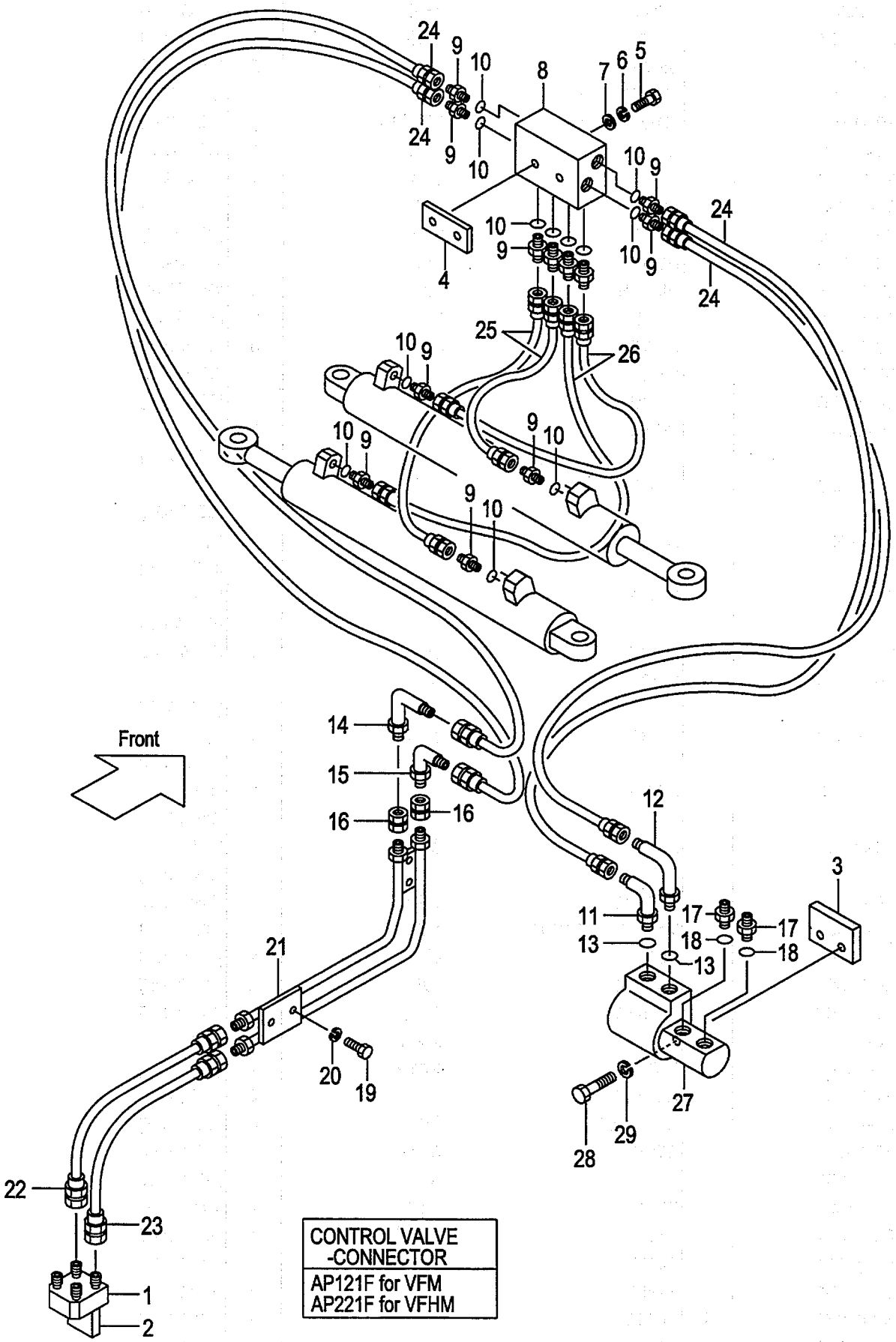

CONTROL VALVE -CONNECTOR
AP121F for VFM AP221F for VFHM

A:LG2A4(J) D:LG2D4(J) G:LG2G4(J)
B:LG2B4(J) E:LG2E4(J) H:LG2H4(J)
C:LG2C4(J) F:LG2F4(J)

FIG.52
(A502LG90)

Item No	Part No.	Mark	Description		Req'd	Remarks : Serial No.
1	62170-12571		STUD	ｽﾀｯﾄﾞ	1	
2	61150-12511		PLATE	ﾌﾟﾚｰﾄ	1	
3	62150-12791		BRACKET	ﾌﾞﾗｹｯﾄ	1	
4	62036-24502		PLATE	ﾌﾟﾚｰﾄ	1	
5	01100-08050		BOLT	ﾎﾞﾙﾄ	2	
6	02010-00008		WASHER	ﾜｯｼｬ	2	
7	02000-00008		WASHER	ﾜｯｼｬ	2	
8	63130-16432		VALVE,CHECK	ﾊﾞﾙﾌﾞ	1	
9	04134-00303		NIPPLE	ﾆｯﾌﾟﾙ	12	
10	03320-00140		O-RING	Oﾘﾝｸﾞ	12	
11	04150-00303		ELBOW	ｴﾙﾎﾞ	1	
12	04150-10303		ELBOW	ｴﾙﾎﾞ	1	
13	03320-00140		O-RING	Oﾘﾝｸﾞ	2	
14	53110-12121		ELBOW	ｴﾙﾎﾞ	1	
15	53110-12131		ELBOW	ｴﾙﾎﾞ	1	
16	04139-00303		UNION	ﾕﾆｵﾝ	2	
17	63110-12281		NIPPLE	ﾆｯﾌﾟﾙ	2	
18	03320-00140		O-RING	Oﾘﾝｸﾞ	2	
19	01100-08012		BOLT	ﾎﾞﾙﾄ	4	
20	02010-00008		WASHER	ﾜｯｼｬ	4	
21	62150-12701		PIPE	ﾊﾟｲﾌﾟ	1	
22	63130-21040		HOSE	ﾎｰｽ	1	[VFM]
-	63130-21034		HOSE	ﾎｰｽ	1	[VFHM]
23	63130-21050		HOSE	ﾎｰｽ	1	[VFM]
-	63130-21044		HOSE	ﾎｰｽ	1	[VFHM]
24	63130-21055		HOSE	ﾎｰｽ	4	
25	63130-21070		HOSE	ﾎｰｽ	2	
26	63130-21070		HOSE	ﾎｰｽ	2	A,E
-	63130-21075		HOSE	ﾎｰｽ	2	B,F
-	63130-21080		HOSE	ﾎｰｽ	2	C,G
-	63130-21085		HOSE	ﾎｰｽ	2	D,H
27	63130-15083		BLOCK,JUNCTION,RH	ﾌﾞﾛｯｸ	1	
28	01100-12035		BOLT	ﾎﾞﾙﾄ	2	
29	02010-00012		WASHER	ﾜｯｼｬ	2	
30	62150-12781	+	BRACKET	ﾌﾞﾗｹｯﾄ	1	
31	62150-12771	+	BRACKET	ﾌﾞﾗｹｯﾄ	1	

FIG.53 HYDRAULIC LINE (CONNECTOR-CYLINDER)[VFM/4DK][VFHM/4DK]

(A502LGA0) ハイドロリックライン (コネクター-シリンダ)

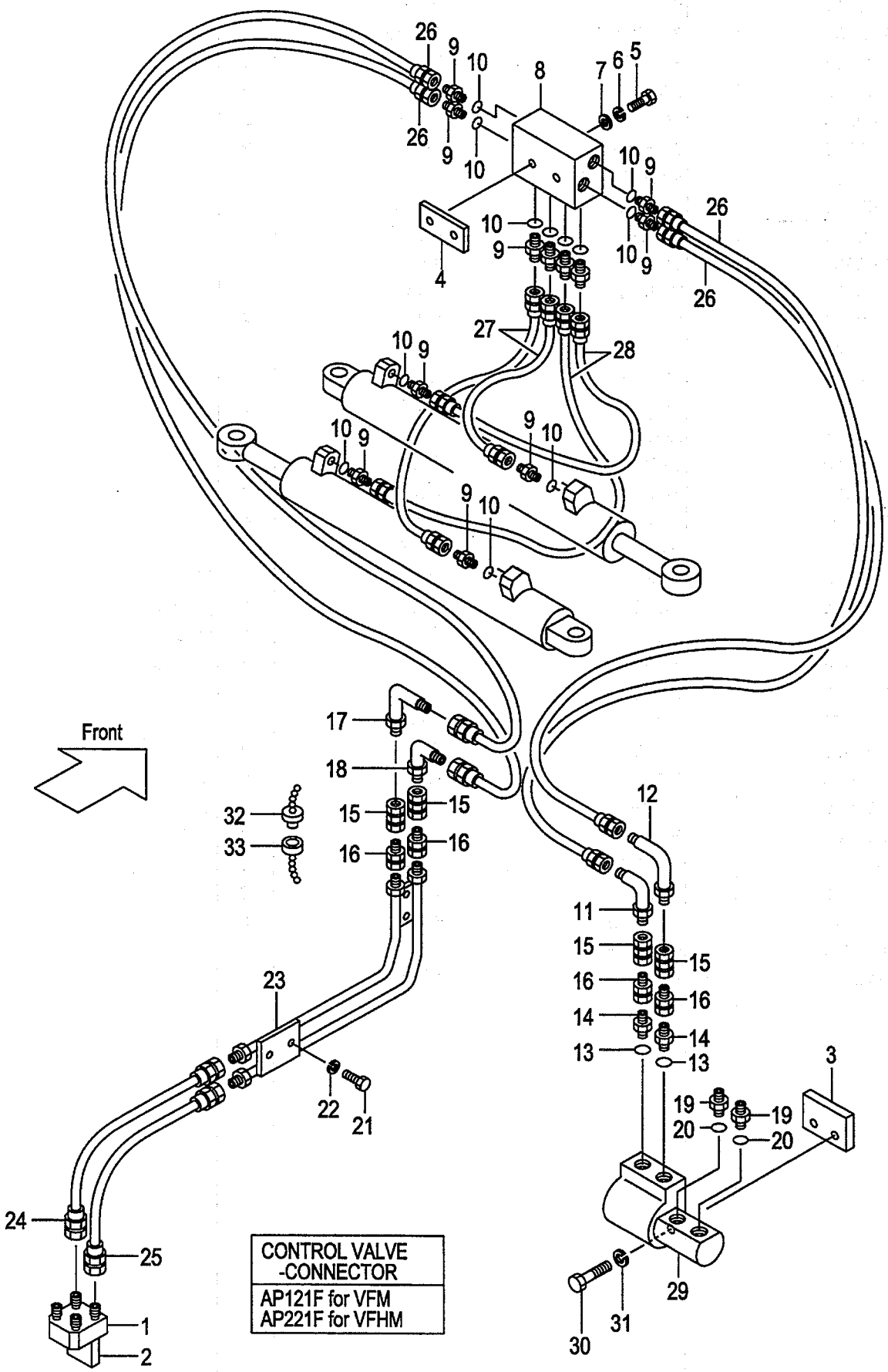

A:LG2A4(J) D:LG2D4(J) G:LG2G4(J)
B:LG2B4(J) E:LG2E4(J) H:LG2H4(J)
C:LG2C4(J) F:LG2F4(J)

FIG.53
(A502LGA0)

Item No	Part No.	Mark	Description		Req'd	Remarks : Serial No.
1	62170-12571		STUD	ｽﾀｯﾄﾞ	1	[4DK]
2	61150-12511		PLATE	ﾌﾟﾚｰﾄ	1	[4DK]
3	62150-12791		BRACKET	ﾌﾞﾗｹｯﾄ	1	[4DK]
4	62036-24502		PLATE	ﾌﾟﾚｰﾄ	1	[4DK]
5	01100-08050		BOLT	ﾎﾞﾙﾄ	2	[4DK]
6	02010-00008		WASHER	ﾜｯｼｬ	2	[4DK]
7	02000-00008		WASHER	ﾜｯｼｬ	2	[4DK]
8	63130-16432		VALVE,CHECK	ﾊﾞﾙﾌﾞ	1	[4DK]
9	04134-00303		NIPPLE	ﾆｯﾌﾟﾙ	12	[4DK]
10	03320-00140		O-RING	Oﾘﾝｸﾞ	12	[4DK]
11	53110-12131		ELBOW	ｴﾙﾎﾞ	1	[4DK]
12	53110-12121		ELBOW	ｴﾙﾎﾞ	1	[4DK]
13	03320-00140		O-RING	Oﾘﾝｸﾞ	2	[4DK]
14	04134-00303		NIPPLE	ﾆｯﾌﾟﾙ	2	[4DK]
15	50226-29111		COUPLING	ｶｯﾌﾟﾘﾝｸﾞ	4	[4DK]
16	04138-00303		UNION	ﾕﾆｵﾝ	4	[4DK]
17	53110-12121		ELBOW	ｴﾙﾎﾞ	1	[4DK]
18	53110-12131		ELBOW	ｴﾙﾎﾞ	1	[4DK]
19	63110-12281		NIPPLE	ﾆｯﾌﾟﾙ	2	[4DK]
20	03320-00140		O-RING	Oﾘﾝｸﾞ	2	[4DK]
21	01100-08012		BOLT	ﾎﾞﾙﾄ	4	[4DK]
22	02010-00008		WASHER	ﾜｯｼｬ	4	[4DK]
23	62150-12701		PIPE	ﾊﾟｲﾌﾟ	1	[4DK]
24	63130-21040		HOSE	ﾎｰｽ	1	[VFM/4DK]
-	63130-21034		HOSE	ﾎｰｽ	1	[VFHM/4DK]
25	63130-21050		HOSE	ﾎｰｽ	1	[VFM/4DK]
-	63130-21044		HOSE	ﾎｰｽ	1	[VFHM/4DK]
26	63130-21055		HOSE	ﾎｰｽ	4	[4DK]
27	63130-21070		HOSE	ﾎｰｽ	2	[4DK]
28	63130-21070		HOSE	ﾎｰｽ	2	A,E [4DK]
-	63130-21075		HOSE	ﾎｰｽ	2	B,F [4DK]
-	63130-21080		HOSE	ﾎｰｽ	2	C,G [4DK]
-	63130-21085		HOSE	ﾎｰｽ	2	D,H [4DK]
29	63130-15083		BLOCK,JUNCTION,RH	ﾌﾞﾛｯｸ	1	[4DK]
30	01100-12035		BOLT	ﾎﾞﾙﾄ	2	[4DK]
31	02010-00012		WASHER	ﾜｯｼｬ	2	[4DK]
32	63130-14061		PLUG	ﾌﾟﾗｸﾞ	4	[4DK]
33	63130-14071		CAP	ｷｬｯﾌﾟ	4	[4DK]
34	27132-40181	+	BAND	ﾊﾞﾝﾄﾞ	8	[4DK]
35	62036-23501	+	BAR	ﾊﾞｰ	1	[4DK]
36	62150-12781	+	BRACKET	ﾌﾞﾗｹｯﾄ	1	[4DK]
37	62150-12771	+	BRACKET	ﾌﾞﾗｹｯﾄ	1	[4DK]

FIG.54 HYDRAULIC LINE (CONNECTOR-CYLINDER)[VFM/SSV][VFHM/SSV]

(A502LGB0) ﾊｲﾄﾞﾛﾘｯｸﾗｲﾝ (ｺﾈｸﾀｰｼﾘﾝﾀﾞ)

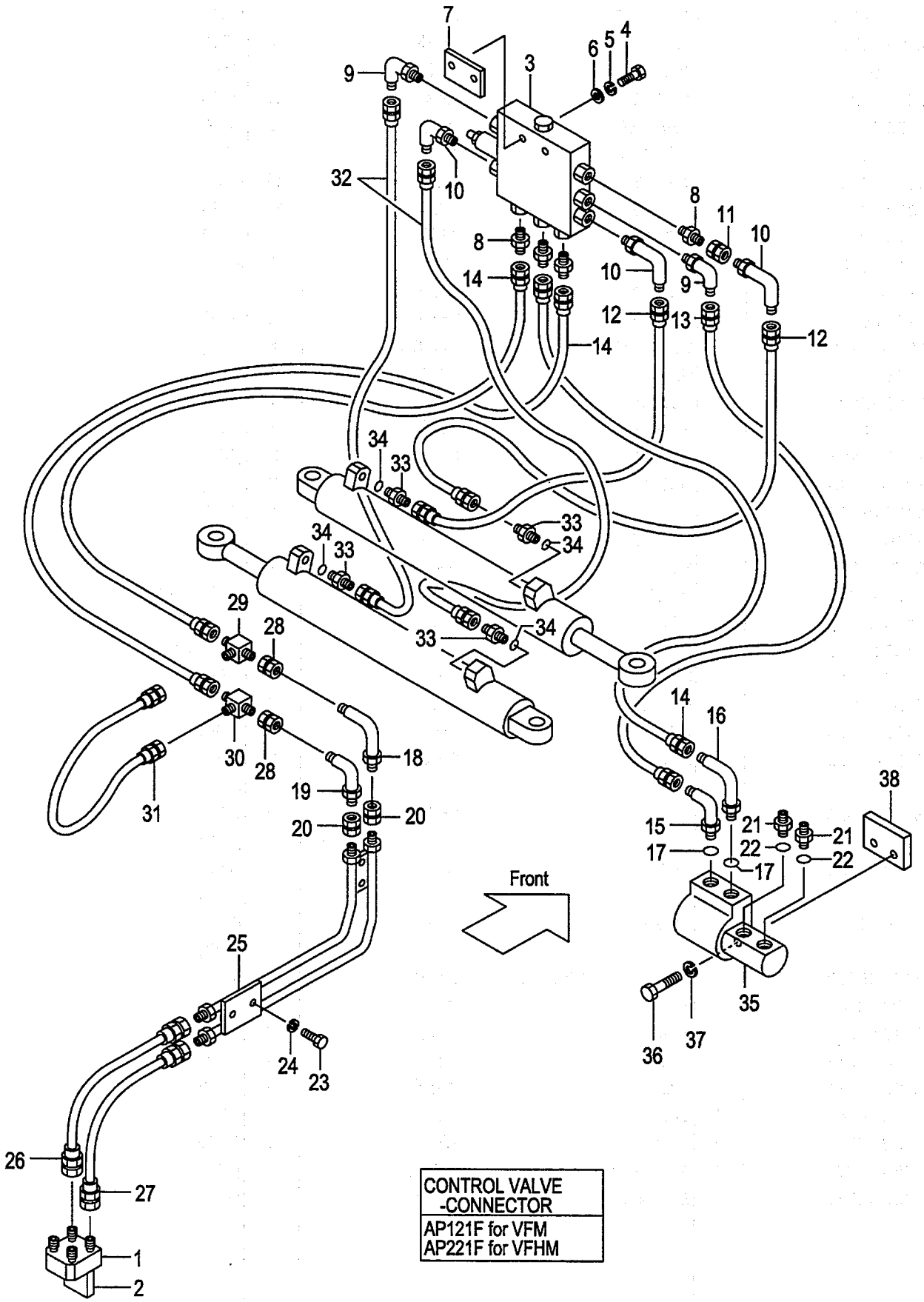

A:LG2A4(J) D:LG2D4(J) G:LG2G4(J)
B:LG2B4(J) E:LG2E4(J) H:LG2H4(J)
C:LG2C4(J) F:LG2F4(J)

FIG.54
(A502LGB0)

Item No	Part No.	Mark	Description		Req'd	Remarks : Serial No.
1	62170-12571		STUD	ｽﾀｯﾄﾞ	1	[SSV]
2	61150-12511		PLATE	ﾌﾟﾚｰﾄ	1	[SSV]
3	63130-12651		VALVE,SIDE-SHIFT	ﾊﾞﾙﾌﾞ	1	[SSV]
4	01100-08045		BOLT	ﾎﾞﾙﾄ	2	[SSV]
5	02000-00008		WASHER	ﾜｯｼｬ	2	[SSV]
6	02010-00008		WASHER	ﾜｯｼｬ	2	[SSV]
7	62246-24201		PLATE	ﾌﾟﾚｰﾄ	1	[SSV]
8	04137-00303		NIPPLE	ﾆｯﾌﾟﾙ	4	[SSV]
9	53110-12121		ELBOW	ｴﾙﾎﾞ	2	[SSV]
10	53110-12131		ELBOW	ｴﾙﾎﾞ	3	[SSV]
11	04139-00303		UNION	ﾕﾆｵﾝ	1	[SSV]
12	63130-21070		HOSE	ﾎｰｽ	2	A,E [SSV]
-	63130-21075		HOSE	ﾎｰｽ	2	B,F [SSV]
-	63130-21080		HOSE	ﾎｰｽ	2	C,G [SSV]
-	63130-21085		HOSE	ﾎｰｽ	2	D,H [SSV]
13	63130-21050		HOSE	ﾎｰｽ	1	[SSV]
14	63130-21055		HOSE	ﾎｰｽ	3	[SSV]
15	04150-00303		ELBOW	ｴﾙﾎﾞ	1	[SSV]
16	04150-10303		ELBOW	ｴﾙﾎﾞ	1	[SSV]
17	03320-00140		O-RING	Oﾘﾝｸﾞ	2	[SSV]
18	53110-12121		ELBOW	ｴﾙﾎﾞ	1	[SSV]
19	53110-12131		ELBOW	ｴﾙﾎﾞ	1	[SSV]
20	04139-00303		UNION	ﾕﾆｵﾝ	2	[SSV]
21	63110-12281		NIPPLE	ﾆｯﾌﾟﾙ	2	[SSV]
22	03320-00140		O-RING	Oﾘﾝｸﾞ	2	[SSV]
23	01100-08012		BOLT	ﾎﾞﾙﾄ	4	[SSV]
24	02010-00008		WASHER	ﾜｯｼｬ	4	[SSV]
25	62150-12701		PIPE	ﾊﾟｲﾌﾟ	1	[SSV]
26	63130-21040		HOSE	ﾎｰｽ	1	[VFM/SSV]
-	63130-21034		HOSE	ﾎｰｽ	1	[VFHM/SSV]
27	63130-21050		HOSE	ﾎｰｽ	1	[VFM/SSV]
-	63130-21044		HOSE	ﾎｰｽ	1	[VFHM/SSV]
28	63130-12711		UNION	ﾕﾆｵﾝ	2	[SSV]
29	63110-13121		THREE-WAY	ｽﾘｰｳｴｲ	1	[SSV]
30	63110-18601		THREE-WAY	ｽﾘｰｳｴｲ	1	[SSV]
31	63130-31033		HOSE	ﾎｰｽ	1	[SSV]
32	63130-21070		HOSE	ﾎｰｽ	2	[SSV]
33	04134-00303		NIPPLE	ﾆｯﾌﾟﾙ	4	[SSV]
34	03320-00140		O-RING	Oﾘﾝｸﾞ	4	[SSV]
35	63130-15083		BLOCK,JUNCTION,RH	ﾌﾞﾛｯｸ	1	[SSV]
36	01100-12035		BOLT	ﾎﾞﾙﾄ	2	[SSV]
37	02010-00012		WASHER	ﾜｯｼｬ	2	[SSV]
38	62150-12791		BRACKET	ﾌﾞﾗｹｯﾄ	1	[SSV]
39	62150-12781	+	BRACKET	ﾌﾞﾗｹｯﾄ	1	[SSV]
40	62150-12771	+	BRACKET	ﾌﾞﾗｹｯﾄ	1	[SSV]

HYDRAULIC LINE
FIG.55 (CONNECTOR-CYLINDER)[(VFM,VFHM)/SSV/4DK]
(A502LGC0) ﾊｲﾄﾞﾛﾘｯｸﾗｲﾝ (ｺﾈｸﾀｰｼﾘﾝﾀﾞｰ)

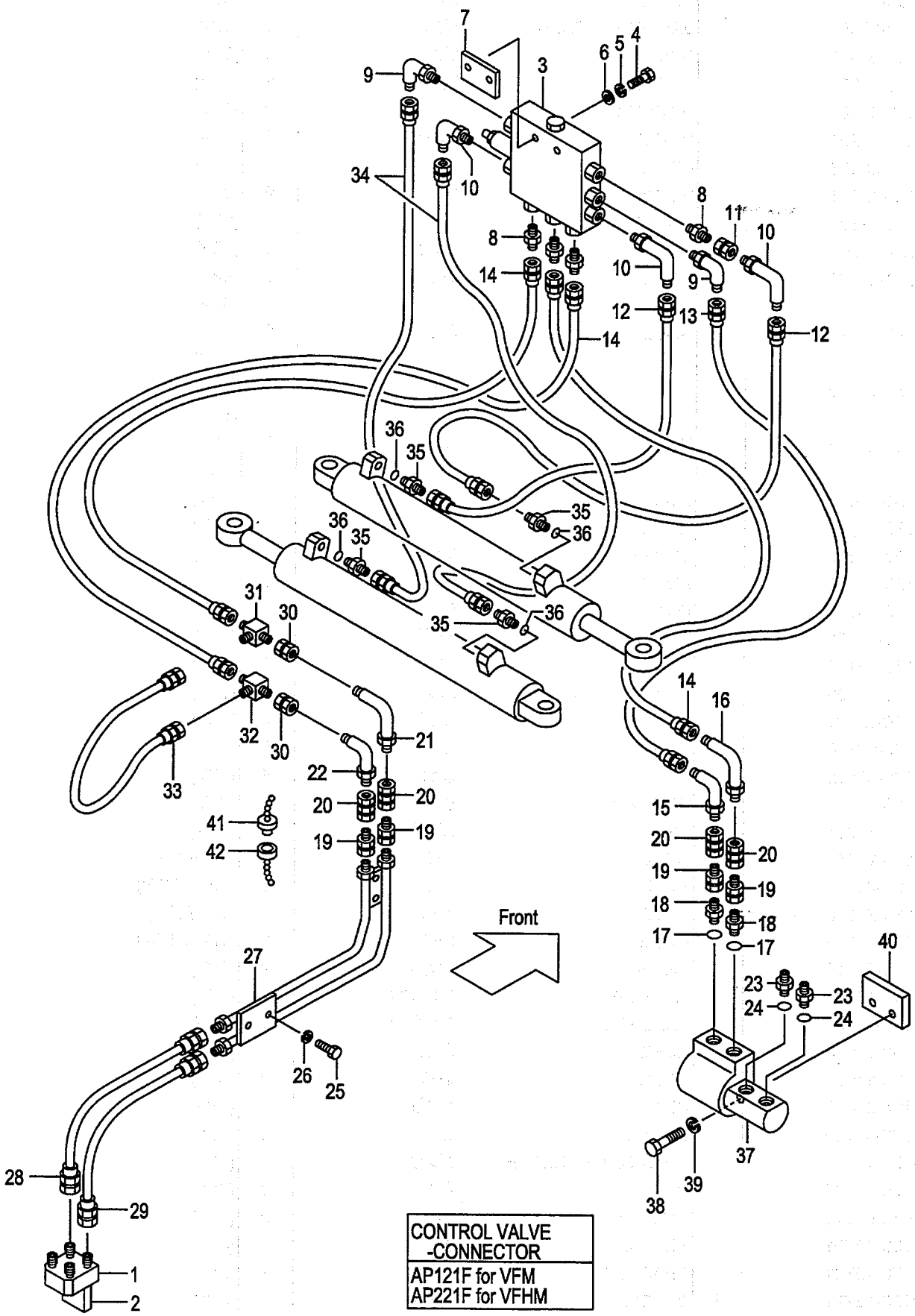

A:LG2A4(J) D:LG2D4(J) G:LG2G4(J)
B:LG2B4(J) E:LG2E4(J) H:LG2H4(J)
C:LG2C4(J) F:LG2F4(J)

FIG.55
(A502LGC0)

Item No	Part No.	Mark	Description		Req'd	Remarks : Serial No.
1	62170-12571		STUD	ｽﾀｯﾄﾞ	1	[SSV/4DK]
2	61150-12511		PLATE	ﾌﾟﾚｰﾄ	1	[SSV/4DK]
3	63130-12651		VALVE,SIDE-SHIFT	ﾊﾞﾙﾌﾞ	1	[SSV/4DK]
4	01100-08045		BOLT	ﾎﾞﾙﾄ	2	[SSV/4DK]
5	02000-00008		WASHER	ﾜｯｼｬ	2	[SSV/4DK]
6	02010-00008		WASHER	ﾜｯｼｬ	2	[SSV/4DK]
7	62246-24201		PLATE	ﾌﾟﾚｰﾄ	1	[SSV/4DK]
8	04137-00303		NIPPLE	ﾆｯﾌﾟﾙ	4	[SSV/4DK]
9	53110-12121		ELBOW	ｴﾙﾎﾞ	2	[SSV/4DK]
10	53110-12131		ELBOW	ｴﾙﾎﾞ	3	[SSV/4DK]
11	04139-00303		UNION	ﾕﾆｵﾝ	1	[SSV/4DK]
12	63130-21070		HOSE	ﾎｰｽ	2	A,E [SSV/4DK]
-	63130-21075		HOSE	ﾎｰｽ	2	B,F [SSV/4DK]
-	63130-21080		HOSE	ﾎｰｽ	2	C,G [SSV/4DK]
-	63130-21085		HOSE	ﾎｰｽ	2	D,H [SSV/4DK]
13	63130-21050		HOSE	ﾎｰｽ	1	[SSV/4DK]
14	63130-21055		HOSE	ﾎｰｽ	3	[SSV/4DK]
15	53110-12131		ELBOW	ｴﾙﾎﾞ	1	[SSV/4DK]
16	53110-12121		ELBOW	ｴﾙﾎﾞ	1	[SSV/4DK]
17	03320-00140		O-RING	Oﾘﾝｸﾞ	2	[SSV/4DK]
18	04134-00303		NIPPLE	ﾆｯﾌﾟﾙ	2	[SSV/4DK]
19	04138-00303		UNION	ﾕﾆｵﾝ	4	[SSV/4DK]
20	50226-29111		COUPLING	ｶｯﾌﾟﾘﾝｸﾞ	4	[SSV/4DK]
21	53110-12121		ELBOW	ｴﾙﾎﾞ	1	[SSV/4DK]
22	53110-12131		ELBOW	ｴﾙﾎﾞ	1	[SSV/4DK]
23	63110-12281		NIPPLE	ﾆｯﾌﾟﾙ	2	[SSV/4DK]
24	03320-00140		O-RING	Oﾘﾝｸﾞ	2	[SSV/4DK]
25	01100-08012		BOLT	ﾎﾞﾙﾄ	4	[SSV/4DK]
26	02010-00008		WASHER	ﾜｯｼｬ	4	[SSV/4DK]
27	62150-12701		PIPE	ﾊﾟｲﾌﾟ	1	[SSV/4DK]
28	63130-21040		HOSE	ﾎｰｽ	1	[VFM/SSV/4DK]
-	63130-21034		HOSE	ﾎｰｽ	1	[VFHM/SSV/4DK]
29	63130-21050		HOSE	ﾎｰｽ	1	[VFM/SSV/4DK]
-	63130-21044		HOSE	ﾎｰｽ	1	[VFHM/SSV/4DK]
30	63130-12711		UNION	ﾕﾆｵﾝ	2	[SSV/4DK]
31	63110-13121		THREE-WAY	ｽﾘｰｳｴｲ	1	[SSV/4DK]
32	63110-18601		THREE-WAY	ｽﾘｰｳｴｲ	1	[SSV/4DK]
33	63130-31033		HOSE	ﾎｰｽ	1	[SSV/4DK]
34	63130-21070		HOSE	ﾎｰｽ	2	[SSV/4DK]
35	04134-00303		NIPPLE	ﾆｯﾌﾟﾙ	4	[SSV/4DK]
36	03320-00140		O-RING	Oﾘﾝｸﾞ	4	[SSV/4DK]
37	63130-15083		BLOCK,JUNCTION,RH	ﾌﾞﾛｯｸ	1	[SSV/4DK]
38	01100-12035		BOLT	ﾎﾞﾙﾄ	2	[SSV/4DK]
39	02010-00012		WASHER	ﾜｯｼｬ	2	[SSV/4DK]
40	62150-12791		BRACKET	ﾌﾞﾗｹｯﾄ	1	[SSV/4DK]
41	63130-14061		PLUG	ﾌﾟﾗｸﾞ	4	[SSV/4DK]

HYDRAULIC LINE
FIG.55 (CONNECTOR-CYLINDER)[(VFM,VFHM)/SSV/4DK]
(A502LGC0) ﾊｲﾄﾞﾛﾘｯｸﾗｲﾝ (ｺﾈｸﾀｰｼﾘﾝﾀﾞｰ)

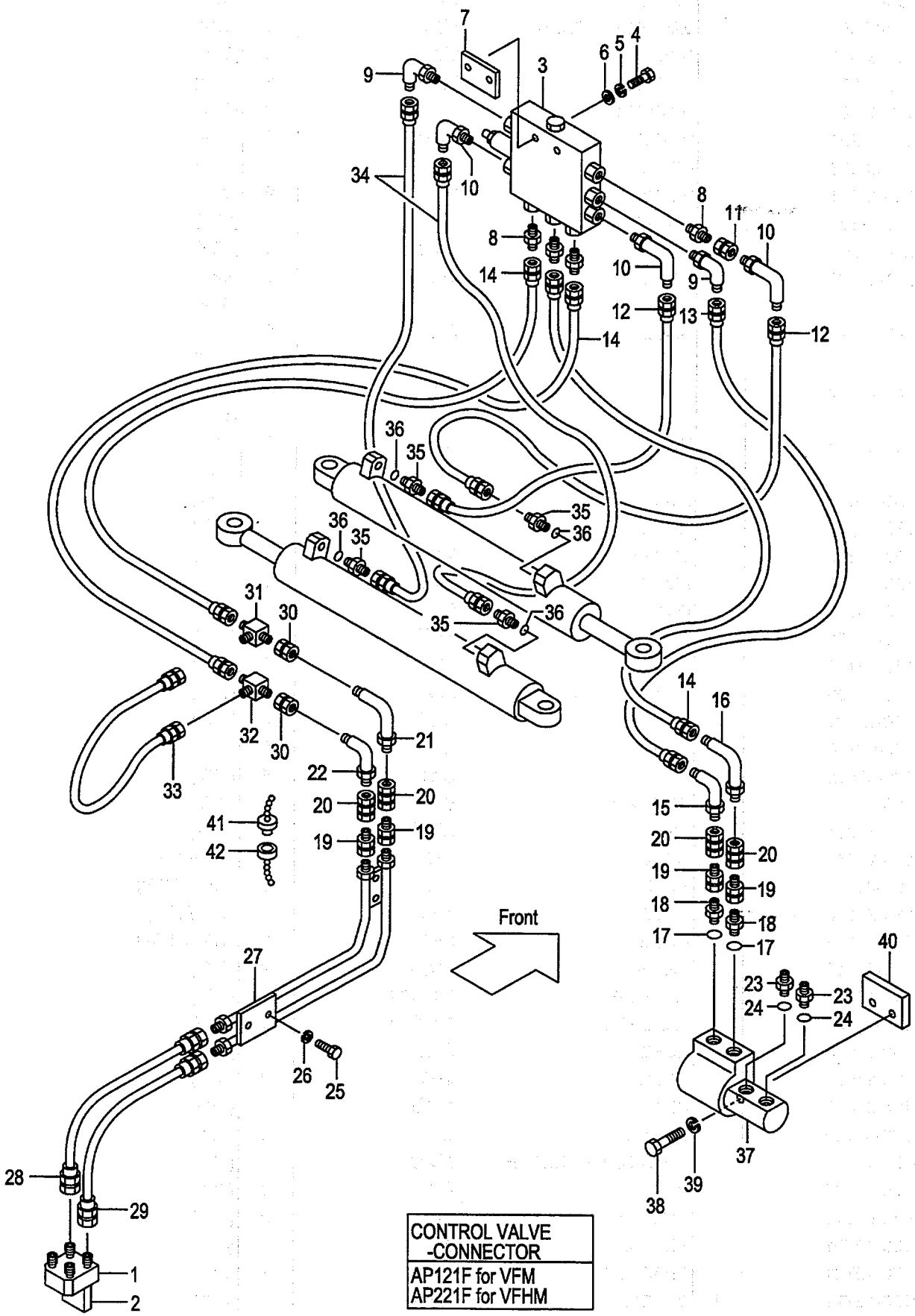

A:LG2A4(J) D:LG2D4(J) G:LG2G4(J)
B:LG2B4(J) E:LG2E4(J) H:LG2H4(J)
C:LG2C4(J) F:LG2F4(J)

FIG.55
(A502LGC0)

Item No	Part No.	Mark	Description		Req'd	Remarks : Serial No.
42	63130-14071		CAP	ｷｬｯﾌﾟ	4	[SSV/4DK]
43	27132-40181	+	BAND	ﾊﾞﾝﾄﾞ	4	[SSV/4DK]
44	62150-12781	+	BRACKET	ﾌﾞﾗｹｯﾄ	1	[SSV/4DK]
45	62150-12771	+	BRACKET	ﾌﾞﾗｹｯﾄ	1	[SSV/4DK]
46	62036-23501	+	BAR	ﾊﾞｰ	1	[SSV/4DK]

LOAD GRAB

FIG.56 [LG3A4,LG3B4,LG3C4,LG3D4,LG3E4,LG3F4]

(A503LG10) ﾛｰﾄﾞｸﾞﾗﾌﾞ

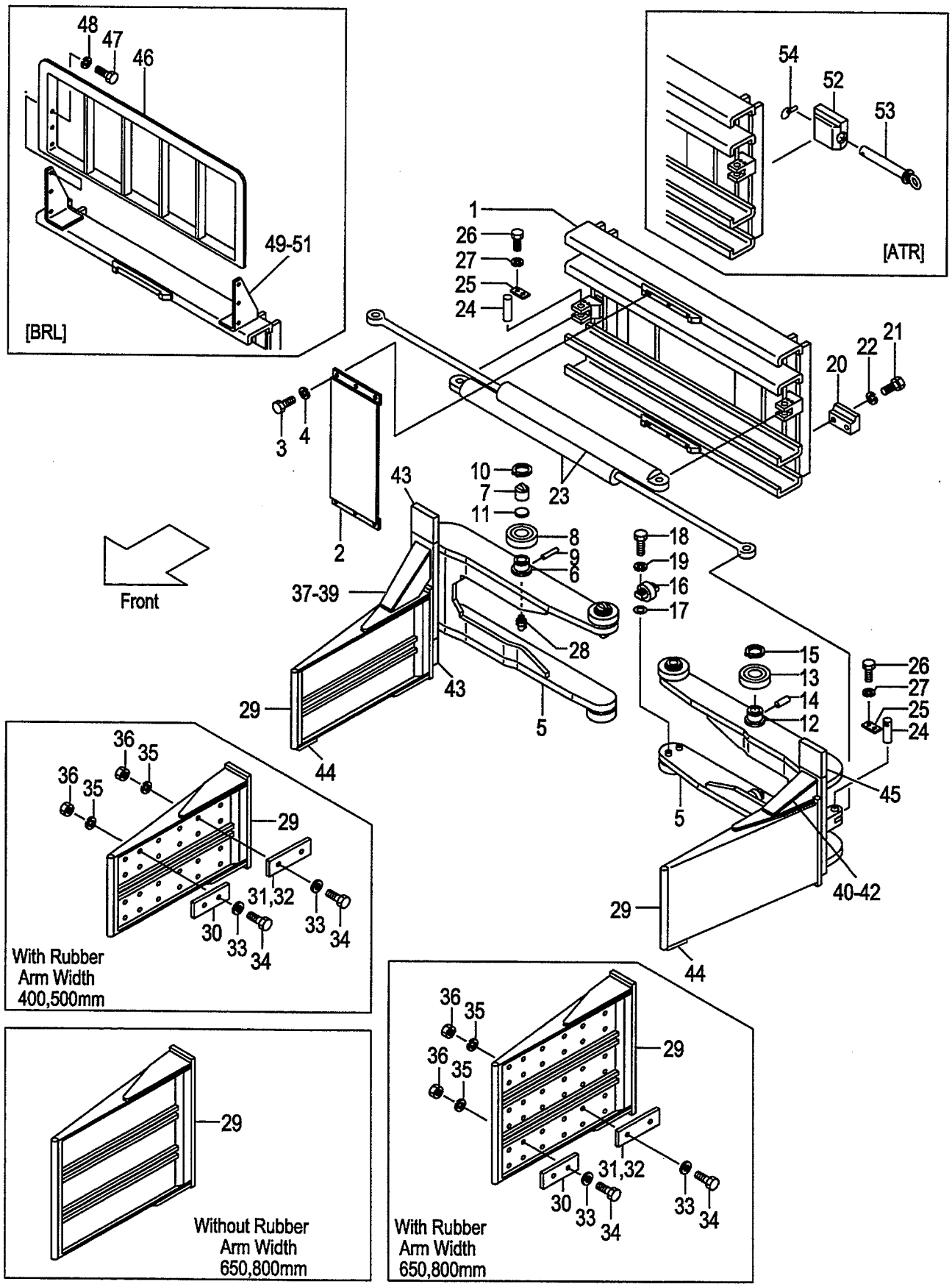

A:LG3A4(J) D:LG3D4(J)
B:LG3B4(J) E:LG3E4(J)
C:LG3C4(J) F:LG3F4(J)

FIG.56
(A503LG10)

Item No	Part No.	Mark	Description		Req'd	Remarks : Serial No.
A1	63146-20001		GRAB-ASSY,LOAD	ﾛｰﾄﾞｸﾞﾗﾌﾞｱｯｾﾝ	1	INC.1-36
-	63146-20011		GRAB-ASSY,LOAD	ﾛｰﾄﾞｸﾞﾗﾌﾞｱｯｾﾝ	1	INC.1-36
-	63146-20021		GRAB-ASSY,LOAD	ﾛｰﾄﾞｸﾞﾗﾌﾞｱｯｾﾝ	1	INC.1-36
-	63146-20031		GRAB-ASSY,LOAD	ﾛｰﾄﾞｸﾞﾗﾌﾞｱｯｾﾝ	1	INC.1-36
-	63146-20041		GRAB-ASSY,LOAD	ﾛｰﾄﾞｸﾞﾗﾌﾞｱｯｾﾝ	1	INC.1-36
-	63146-20051		GRAB-ASSY,LOAD	ﾛｰﾄﾞｸﾞﾗﾌﾞｱｯｾﾝ	1	INC.1-36
-	63146-20061		GRAB-ASSY,LOAD	ﾛｰﾄﾞｸﾞﾗﾌﾞｱｯｾﾝ	1	INC.1-36
-	63146-20071		GRAB-ASSY,LOAD	ﾛｰﾄﾞｸﾞﾗﾌﾞｱｯｾﾝ	1	INC.1-36
-	63246-20001		GRAB-ASSY,LOAD	ﾛｰﾄﾞｸﾞﾗﾌﾞｱｯｾﾝ	1	INC.1-36
-	63246-20011		GRAB-ASSY,LOAD	ﾛｰﾄﾞｸﾞﾗﾌﾞｱｯｾﾝ	1	INC.1-36
-	63246-20021		GRAB-ASSY,LOAD	ﾛｰﾄﾞｸﾞﾗﾌﾞｱｯｾﾝ	1	INC.1-36
-	63246-20031		GRAB-ASSY,LOAD	ﾛｰﾄﾞｸﾞﾗﾌﾞｱｯｾﾝ	1	INC.1-36
-	63246-20041		GRAB-ASSY,LOAD	ﾛｰﾄﾞｸﾞﾗﾌﾞｱｯｾﾝ	1	INC.1-36
-	63246-20051		GRAB-ASSY,LOAD	ﾛｰﾄﾞｸﾞﾗﾌﾞｱｯｾﾝ	1	INC.1-36
-	63246-20061		GRAB-ASSY,LOAD	ﾛｰﾄﾞｸﾞﾗﾌﾞｱｯｾﾝ	1	INC.1-36
-	63246-20071		GRAB-ASSY,LOAD	ﾛｰﾄﾞｸﾞﾗﾌﾞｱｯｾﾝ	1	INC.1-36
A2	63146-20101		COMBI.-ASSY,BODY		1	A
				ﾎﾞﾃﾞｨｺﾝﾋﾞﾈｰｼｮﾝｱｯｾﾝ		INC.1-19
-	63146-20111		COMBI.-ASSY,BODY		1	B
				ﾎﾞﾃﾞｨｺﾝﾋﾞﾈｰｼｮﾝｱｯｾﾝ		INC.1-19
-	63146-20121		COMBI.-ASSY,BODY		1	C
				ﾎﾞﾃﾞｨｺﾝﾋﾞﾈｰｼｮﾝｱｯｾﾝ		INC.1-19
-	63246-20101		COMBI.-ASSY,BODY		1	D
				ﾎﾞﾃﾞｨｺﾝﾋﾞﾈｰｼｮﾝｱｯｾﾝ		INC.1-19
-	63246-20111		COMBI.-ASSY,BODY		1	E
				ﾎﾞﾃﾞｨｺﾝﾋﾞﾈｰｼｮﾝｱｯｾﾝ		INC.1-19
-	63246-20121		COMBI.-ASSY,BODY		1	F
				ﾎﾞﾃﾞｨｺﾝﾋﾞﾈｰｼｮﾝｱｯｾﾝ		INC.1-19
1	63146-20151		RAIL	ﾚｰﾙ	1	A,D
-	63146-20161		RAIL	ﾚｰﾙ	1	B,E
-	63146-20171		RAIL	ﾚｰﾙ	1	C,F
2	62246-22121		PLATE	ﾌﾟﾚｰﾄ	1	
3	01103-10025		BOLT	ﾎﾞﾙﾄ	6	
4	02011-00010		WASHER	ﾜｯｼｬ	6	
5	63146-20302		PLATE,SLIDE	ﾌﾟﾚｰﾄ	2	A,B,C
-	63246-20302		PLATE,SLIDE	ﾌﾟﾚｰﾄ	2	D,E,F
A3	62036-20302		ROLLER-ASSY,CROSS	ｸﾛｽﾛｰﾗｱｯｾﾝ	4	INC.6-10
6	NO PART NO.	#	STUD	ｽﾀｯﾄﾞ	4	
7	62036-22512		UNIT,ROLLER,SIDE	ﾕﾆｯﾄ	4	
8	62036-22521		ROLLER,GUIDE	ﾛｰﾗ	4	
9	02270-03010		PIN	ﾋﾟﾝ	4	
10	02100-00060		RING,SNAP	ｽﾅｯﾌﾟﾘﾝｸﾞ	4	
11	61026-22562		SHIM	ｼﾑ	12	
A4	62036-20401		ROLLER-ASSY,GUIDE	ｶﾞｲﾄﾞﾛｰﾗｱｯｾﾝ	4	INC.12-15
12	NO PART NO.	#	STUD	ｽﾀｯﾄﾞ	4	
13	62036-22521		ROLLER,GUIDE	ﾛｰﾗ	4	
14	02270-03010		PIN	ﾋﾟﾝ	4	
15	02100-00060		RING,SNAP	ｽﾅｯﾌﾟﾘﾝｸﾞ	4	
16	62036-21402		ROLLER,SIDE	ﾛｰﾗ	4	
17	23308-22061		SHIM	ｼﾑ	8	

LOAD GRAB

FIG.56 [LG3A4,LG3B4,LG3C4,LG3D4,LG3E4,LG3F4]

(A503LG10) ﾛｰﾄﾞｸﾞﾗﾌﾞ

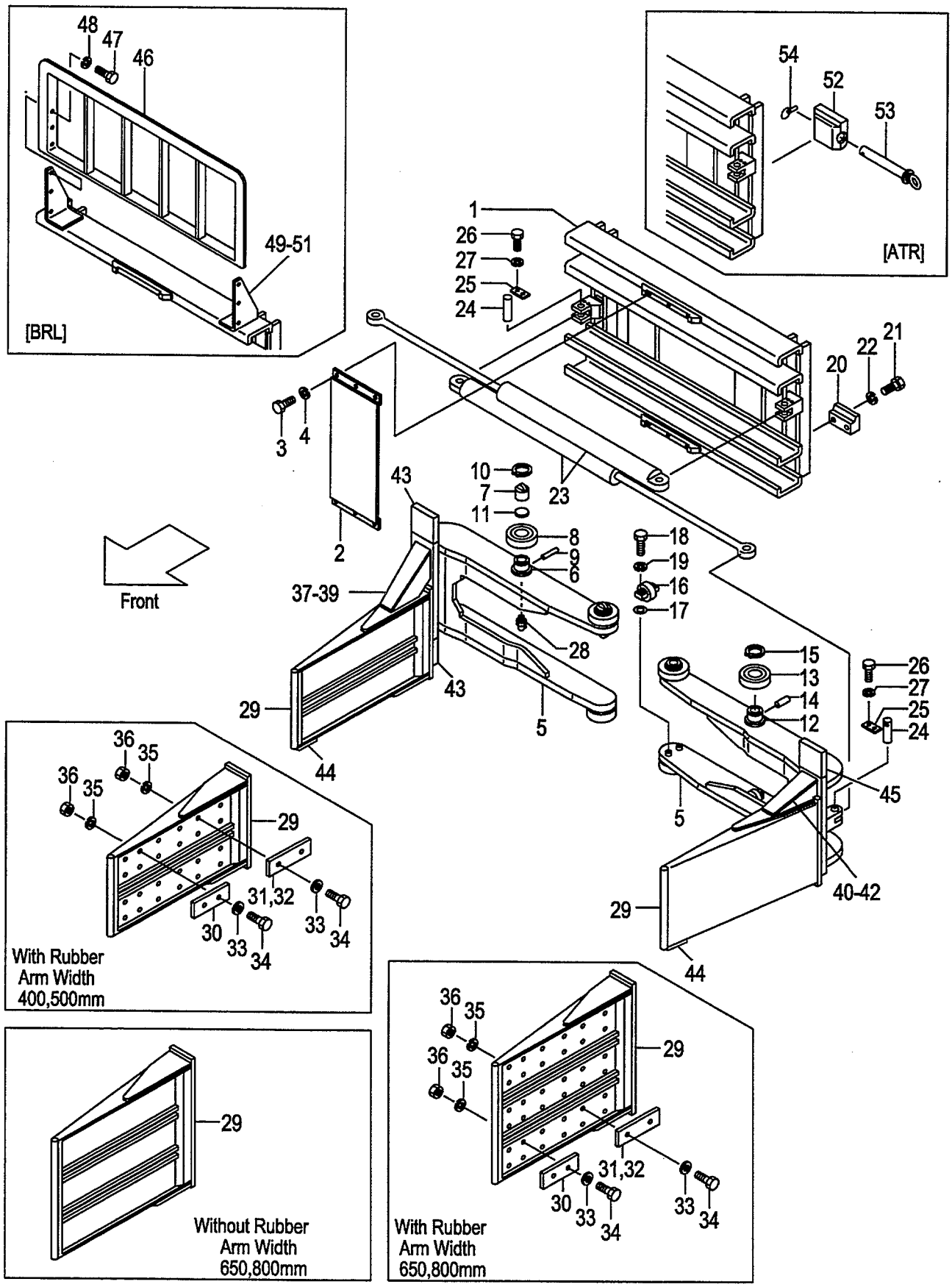

A:LG3A4(J) D:LG3D4(J)
B:LG3B4(J) E:LG3E4(J)
C:LG3C4(J) F:LG3F4(J)

FIG.56
(A503LG10)

Item No	Part No.	Mark	Description		Req'd	Remarks : Serial No.
18	01100-10045		BOLT	ﾎﾞﾙﾄ	8	
19	80223-00071		WASHER	ﾜｯｼｬ	8	
20	52356-20082		PAWL	ﾎﾟｰﾙ	2	
21	01100-16050		BOLT	ﾎﾞﾙﾄ	4	
22	02010-00016		WASHER	ﾜｯｼｬ	4	
23	63136-20901		CYL	ｼﾘﾝﾀﾞ	2	A,D
						SEE FIG.57
-	63136-21001		CYL	ｼﾘﾝﾀﾞ	2	B,E
						SEE FIG.57
-	63136-21011		CYL	ｼﾘﾝﾀﾞ	2	C,F
						SEE FIG.57
24	62036-22301		PIN	ﾋﾟﾝ	4	
25	52519-80461		PLATE	ﾌﾟﾚｰﾄ	4	
26	01100-08016		BOLT	ﾎﾞﾙﾄ	8	
27	02010-00008		WASHER	ﾜｯｼｬ	8	
28	04901-00160		FITTING	ﾌｨｯﾃｨﾝｸﾞ	4	
29	62246-20403		ARM	ｱｰﾑ	2	[ARL037][ARLE37]
-	62246-20413		ARM	ｱｰﾑ	2	[ARL038][ARLE38]
-	62246-20423		ARM	ｱｰﾑ	2	[ARL039][ARLE39]
-	62246-20433		ARM	ｱｰﾑ	2	[ARL040][ARLE40]
-	62246-20443		ARM	ｱｰﾑ	2	[ARL041][ARLE41]
-	62246-20453		ARM	ｱｰﾑ	2	[ARL042][ARLE42]
-	62246-20463		ARM	ｱｰﾑ	2	[ARL043][ARLE43]
-	62246-20473		ARM	ｱｰﾑ	2	[ARL044][ARLE44]
-	62246-20483		ARM	ｱｰﾑ	2	[ARL045][ARLE45]
-	62246-20493		ARM	ｱｰﾑ	2	[ARL046][ARLE46]
-	62246-20503		ARM	ｱｰﾑ	2	[ARL047][ARLE47]
-	62246-20513		ARM	ｱｰﾑ	2	[ARL048][ARLE48]
-	62246-20523		ARM	ｱｰﾑ	2	[ARL049][ARLE49]
-	62246-20533		ARM	ｱｰﾑ	2	[ARL050][ARLE50]
-	62246-20543		ARM	ｱｰﾑ	2	[ARL051][ARLE51]
-	62246-20553		ARM	ｱｰﾑ	2	[ARL052][ARLE52]
-	62246-20563		ARM	ｱｰﾑ	2	[ARL053][ARLE53]
-	62246-20573		ARM	ｱｰﾑ	2	[ARL054][ARLE54]
-	62246-20583		ARM	ｱｰﾑ	2	[ARL055][ARLE55]
-	62246-20593		ARM	ｱｰﾑ	2	[ARL056][ARLE56]
-	62246-20603		ARM	ｱｰﾑ	2	[ARL057][ARLE57]
-	62246-20613		ARM	ｱｰﾑ	2	[ARL058][ARLE58]
-	62246-20623		ARM	ｱｰﾑ	2	[ARL059][ARLE59]
-	62246-20633		ARM	ｱｰﾑ	2	[ARL060][ARLE60]
-	62246-20643		ARM	ｱｰﾑ	2	[ARL061][ARLE61]
-	62246-20653		ARM	ｱｰﾑ	2	[ARL062][ARLE62]
-	62246-20663		ARM	ｱｰﾑ	2	[ARL063][ARLE63]
-	62246-20673		ARM	ｱｰﾑ	2	[ARL064][ARLE64]
-	62246-20683		ARM	ｱｰﾑ	2	[ARL065][ARLE65]
-	62246-20693		ARM	ｱｰﾑ	2	[ARL066][ARLE66]
-	62246-20703		ARM	ｱｰﾑ	2	[ARL067][ARLE67]
-	62246-20713		ARM	ｱｰﾑ	2	[ARL068][ARLE68]
-	62246-20723		ARM	ｱｰﾑ	2	[ARL069][ARLE69]
-	62246-20733		ARM	ｱｰﾑ	2	[ARL070][ARLE70]

LOAD GRAB

FIG.56 [LG3A4,LG3B4,LG3C4,LG3D4,LG3E4,LG3F4]

(A503LG10) ﾛｰﾄﾞｸﾞﾗﾌﾞ

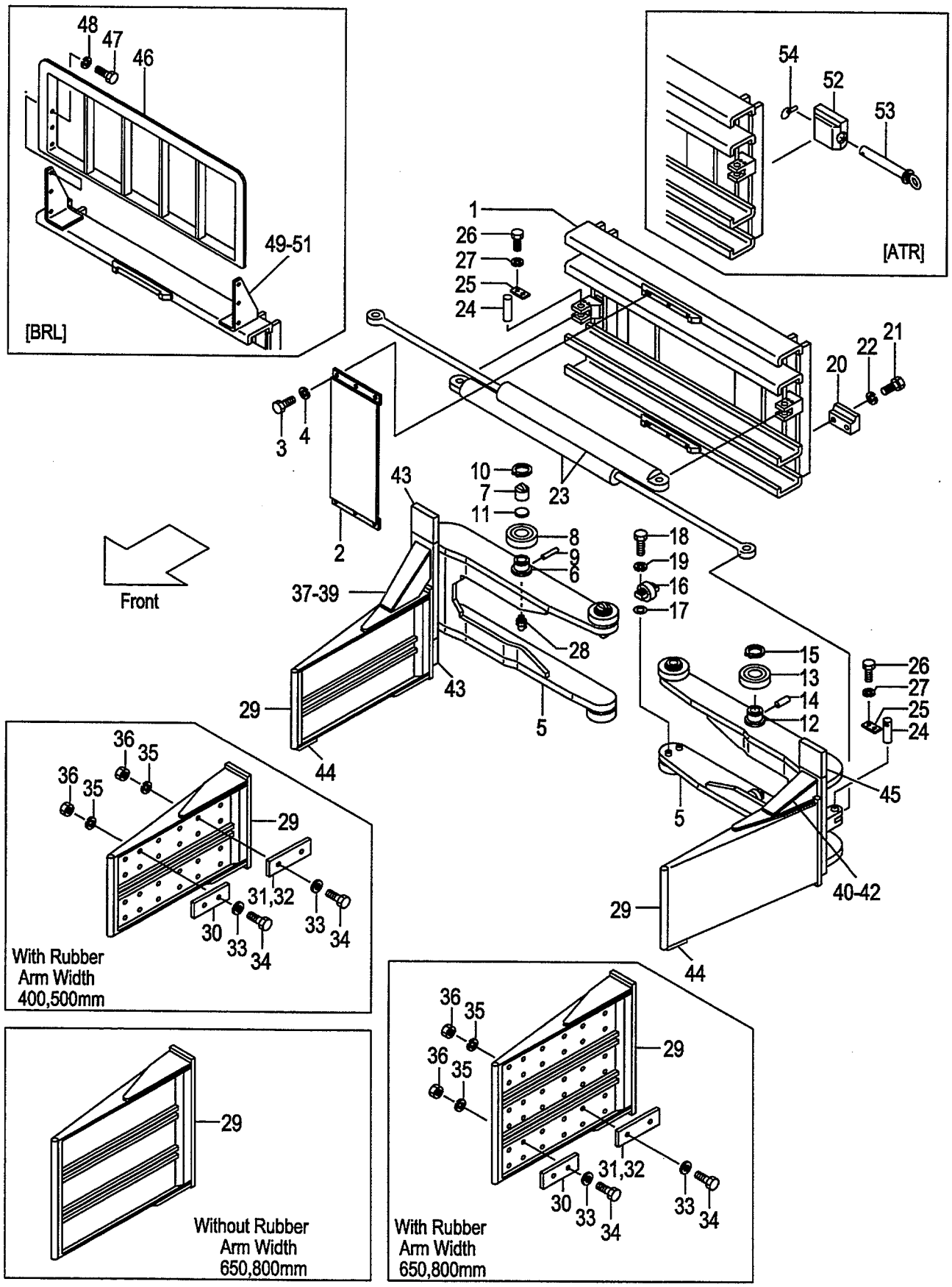

A:LG3A4(J) D:LG3D4(J)
B:LG3B4(J) E:LG3E4(J)
C:LG3C4(J) F:LG3F4(J)

FIG.56
(A503LG10)

Item No	Part No.	Mark	Description		Req'd	Remarks : Serial No.
-	62246-20743		ARM	ｱｰﾑ	2	[ARL071][ARLE71]
-	62246-20753		ARM	ｱｰﾑ	2	[ARL072][ARLE72]
-	62346-20403		ARM	ｱｰﾑ	2	[ARL001][ARLE01]
-	62346-20413		ARM	ｱｰﾑ	2	[ARL002][ARLE02]
-	62346-20423		ARM	ｱｰﾑ	2	[ARL003][ARLE03]
-	62346-20433		ARM	ｱｰﾑ	2	[ARL004][ARLE04]
-	62346-20443		ARM	ｱｰﾑ	2	[ARL005][ARLE05]
-	62346-20453		ARM	ｱｰﾑ	2	[ARL006][ARLE06]
-	62346-20463		ARM	ｱｰﾑ	2	[ARL007][ARLE07]
-	62346-20473		ARM	ｱｰﾑ	2	[ARL008][ARLE08]
-	62346-20483		ARM	ｱｰﾑ	2	[ARL009][ARLE09]
-	62346-20493		ARM	ｱｰﾑ	2	[ARL010][ARLE10]
-	62346-20503		ARM	ｱｰﾑ	2	[ARL011][ARLE11]
-	62346-20513		ARM	ｱｰﾑ	2	[ARL012][ARLE12]
-	62346-20523		ARM	ｱｰﾑ	2	[ARL013][ARLE13]
-	62346-20533		ARM	ｱｰﾑ	2	[ARL014][ARLE14]
-	62346-20543		ARM	ｱｰﾑ	2	[ARL015][ARLE15]
-	62346-20553		ARM	ｱｰﾑ	2	[ARL016][ARLE16]
-	62346-20563		ARM	ｱｰﾑ	2	[ARL017][ARLE17]
-	62346-20573		ARM	ｱｰﾑ	2	[ARL018][ARLE18]
-	62346-20583		ARM	ｱｰﾑ	2	[ARL019][ARLE19]
-	62346-20593		ARM	ｱｰﾑ	2	[ARL020][ARLE20]
-	62346-20603		ARM	ｱｰﾑ	2	[ARL021][ARLE21]
-	62346-20613		ARM	ｱｰﾑ	2	[ARL022][ARLE22]
-	62346-20623		ARM	ｱｰﾑ	2	[ARL023][ARLE23]
-	62346-20633		ARM	ｱｰﾑ	2	[ARL024][ARLE24]
-	62346-20643		ARM	ｱｰﾑ	2	[ARL025][ARLE25]
-	62346-20653		ARM	ｱｰﾑ	2	[ARL026][ARLE26]
-	62346-20663		ARM	ｱｰﾑ	2	[ARL027][ARLE27]
-	62346-20673		ARM	ｱｰﾑ	2	[ARL028][ARLE28]
-	62346-20683		ARM	ｱｰﾑ	2	[ARL029][ARLE29]
-	62346-20693		ARM	ｱｰﾑ	2	[ARL030][ARLE30]
-	62346-20703		ARM	ｱｰﾑ	2	[ARL031][ARLE31]
-	62346-20713		ARM	ｱｰﾑ	2	[ARL032][ARLE32]
-	62346-20723		ARM	ｱｰﾑ	2	[ARL033][ARLE33]
-	62346-20733		ARM	ｱｰﾑ	2	[ARL034][ARLE34]
-	62346-20743		ARM	ｱｰﾑ	2	[ARL035][ARLE35]
-	62346-20753		ARM	ｱｰﾑ	2	[ARL036][ARLE36]
30	62346-24001		RUBBER	ﾗﾊﾞｰ	8	(ARM WIDTH 400,500)
-	62346-24001		RUBBER	ﾗﾊﾞｰ	12	(ARM WIDTH 650,800)
31	62346-24021		RUBBER	ﾗﾊﾞｰ	16	[ARL001][ARLE01][ARL002] [ARLE02]
-	62346-24021		RUBBER	ﾗﾊﾞｰ	24	[ARL003][ARLE03][ARL004] [ARLE04]
-	62346-24011		RUBBER	ﾗﾊﾞｰ	24	[ARL005][ARLE05][ARL006] [ARLE06]
-	62346-24011		RUBBER	ﾗﾊﾞｰ	36	[ARL007][ARLE07][ARL008] [ARLE08]
-	62346-24011		RUBBER	ﾗﾊﾞｰ	8	[ARL009][ARLE09][ARL010] [ARLE10]

LOAD GRAB

FIG.56 [LG3A4,LG3B4,LG3C4,LG3D4,LG3E4,LG3F4]

(A503LG10) ﾛｰﾄﾞｸﾞﾗﾌﾞ

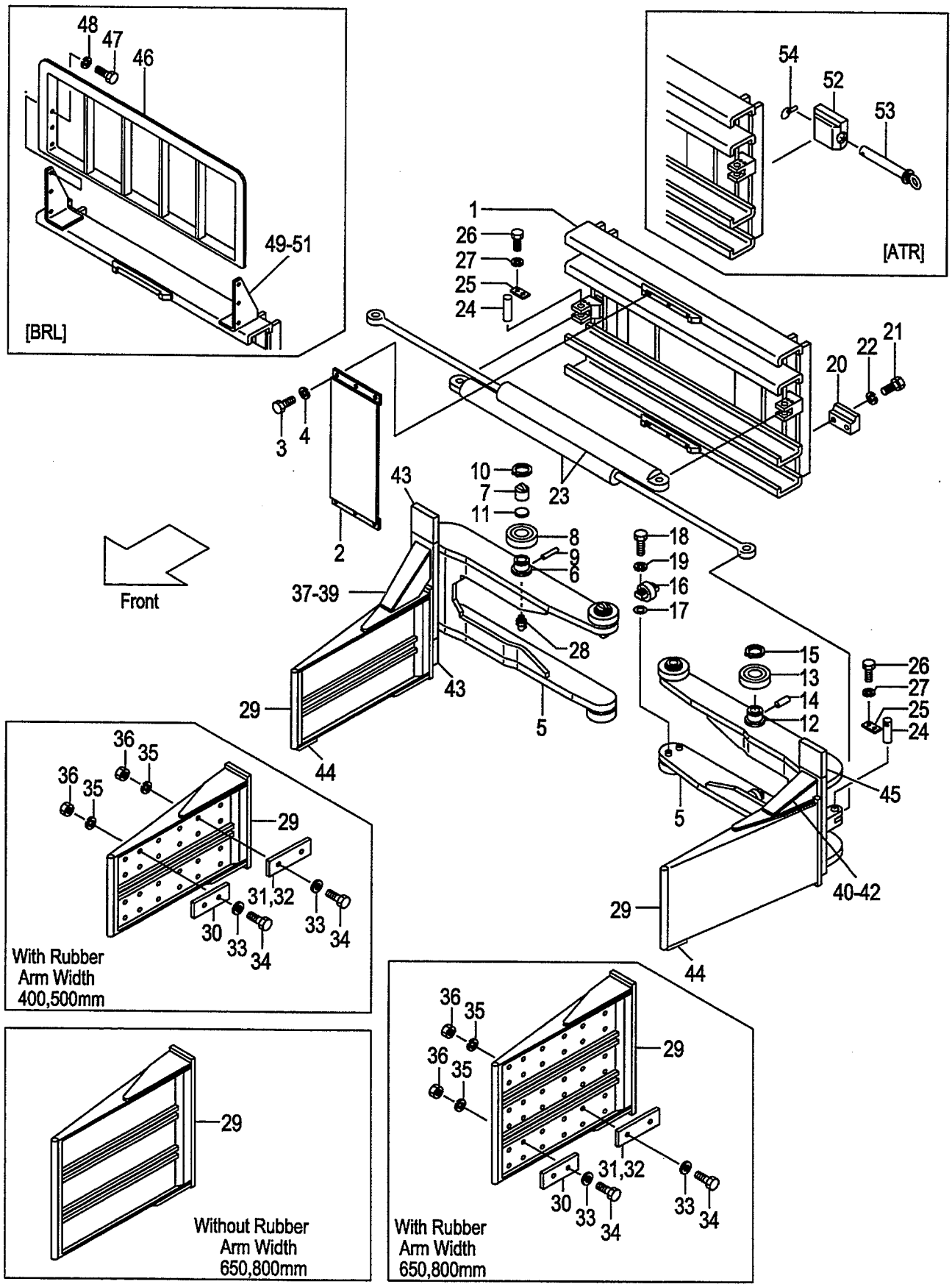

A:LG3A4(J) D:LG3D4(J)
B:LG3B4(J) E:LG3E4(J)
C:LG3C4(J) F:LG3F4(J)

FIG.56
(A503LG10)

Item No	Part No.	Mark	Description		Req'd	Remarks : Serial No.
-	62346-24011		RUBBER	ﾗﾊﾞｰ	12	[ARL011][ARLE11][ARL012] [ARLE12]
-	62346-24011		RUBBER	ﾗﾊﾞｰ	32	[ARL013][ARLE13][ARL014] [ARLE14]
-	62346-24011		RUBBER	ﾗﾊﾞｰ	48	[ARL015][ARLE15][ARL016] [ARLE16]
-	62346-24011		RUBBER	ﾗﾊﾞｰ	16	[ARL017][ARLE17][ARL018] [ARLE18]
-	62346-24011		RUBBER	ﾗﾊﾞｰ	24	[ARL019][ARLE19][ARL020] [ARLE20]
-	62346-24021		RUBBER	ﾗﾊﾞｰ	32	[ARL021][ARLE21][ARL022] [ARLE22]
-	62346-24021		RUBBER	ﾗﾊﾞｰ	48	[ARL023][ARLE23][ARL024] [ARLE24]
-	62346-24011		RUBBER	ﾗﾊﾞｰ	32	[ARL025][ARLE25][ARL026] [ARLE26]
-	62346-24011		RUBBER	ﾗﾊﾞｰ	48	[ARL027][ARLE27][ARL028] [ARLE28]
-	62346-24011		RUBBER	ﾗﾊﾞｰ	16	[ARL029][ARLE29][ARL030] [ARLE30]
-	62346-24011		RUBBER	ﾗﾊﾞｰ	24	[ARL031][ARLE31][ARL032] [ARLE32]
-	62346-24021		RUBBER	ﾗﾊﾞｰ	40	[ARL033][ARLE33][ARL034] [ARLE34]
-	62346-24021		RUBBER	ﾗﾊﾞｰ	60	[ARL035][ARLE35][ARL036] [ARLE36]
32	62346-24021		PLATE,RUBBER	ﾌﾟﾚｰﾄ	16	[ARL009][ARLE09][ARL010] [ARLE10]
-	62346-24021		PLATE,RUBBER	ﾌﾟﾚｰﾄ	24	[ARL011][ARLE11][ARL012] [ARLE12]
-	62346-24021		PLATE,RUBBER	ﾌﾟﾚｰﾄ	16	[ARL017][ARLE17][ARL018] [ARLE18]
-	62346-24021		PLATE,RUBBER	ﾌﾟﾚｰﾄ	24	[ARL019][ARLE19][ARL020] [ARLE20]
-	62346-24021		PLATE,RUBBER	ﾌﾟﾚｰﾄ	8	[ARL025][ARLE25][ARL026] [ARLE26]
-	62346-24021		PLATE,RUBBER	ﾌﾟﾚｰﾄ	12	[ARL027][ARLE27][ARL028] [ARLE28]
-	62346-24021		PLATE,RUBBER	ﾌﾟﾚｰﾄ	24	[ARL029][ARLE29][ARL030] [ARLE30]
-	62346-24021		PLATE,RUBBER	ﾌﾟﾚｰﾄ	36	[ARL031][ARLE31][ARL032] [ARLE32]
33	62346-24101		WASHER	ﾜｯｼｬ	48	[ARL001][ARLE01][ARL002] [ARLE02]
-	62346-24101		WASHER	ﾜｯｼｬ	72	[ARL003][ARLE03][ARL004] [ARLE04]
-	62346-24101		WASHER	ﾜｯｼｬ	64	[ARL005][ARLE05][ARL006] [ARLE06]
-	62346-24101		WASHER	ﾜｯｼｬ	96	[ARL007][ARLE07][ARL008] [ARLE08]

LOAD GRAB

FIG.56 [LG3A4,LG3B4,LG3C4,LG3D4,LG3E4,LG3F4]

(A503LG10) ﾛｰﾄﾞｸﾞﾗﾌﾞ

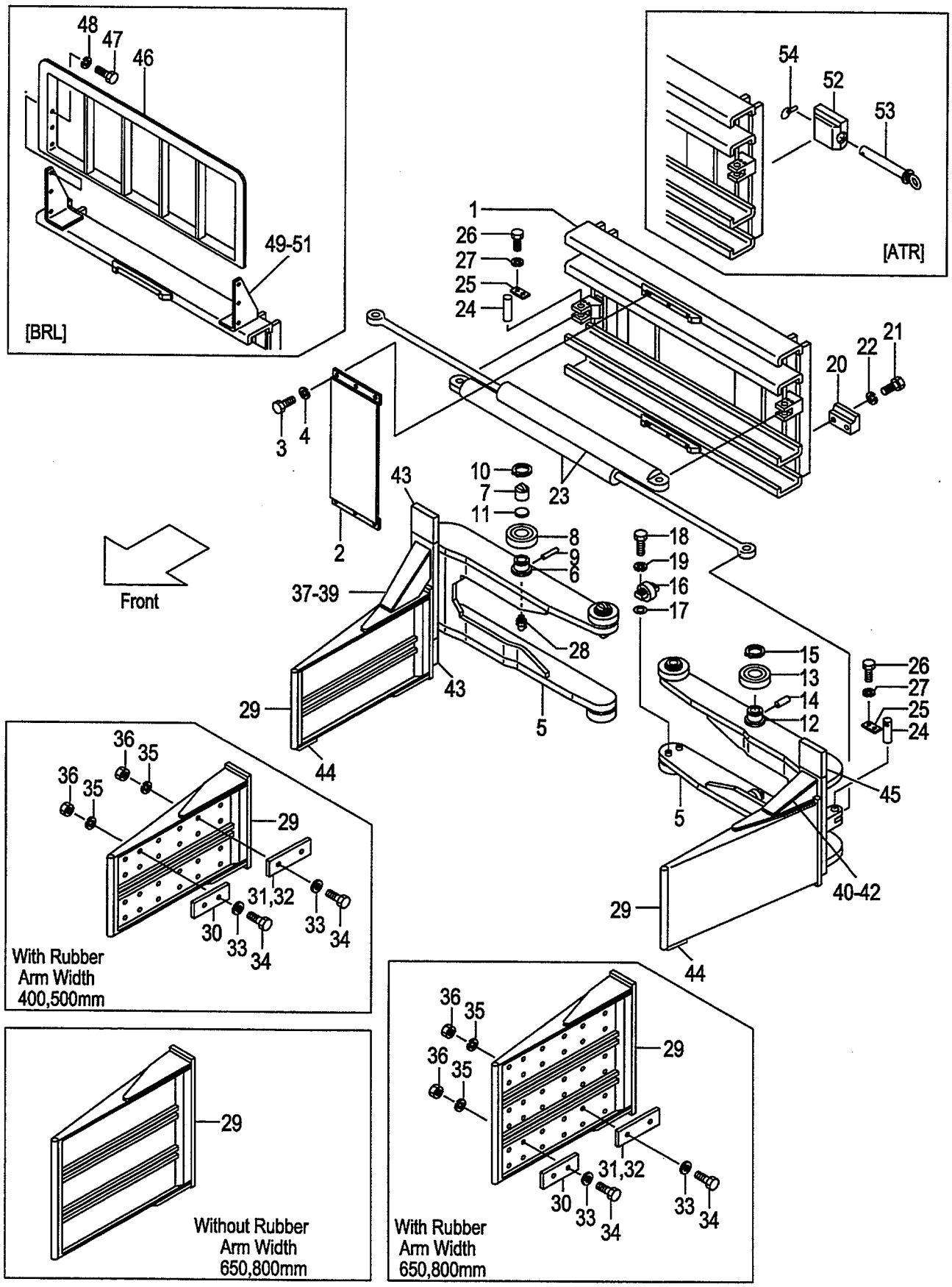

Item No	Part No.	Mark	Description		Req'd	Remarks : Serial No.
-	62346-24101		WASHER	ﾜｯｼｬ	64	[ARL009][ARLE09][ARL010] [ARLE10]
-	62346-24101		WASHER	ﾜｯｼｬ	96	[ARL011][ARLE11][ARL012] [ARLE12]
-	62346-24101		WASHER	ﾜｯｼｬ	80	[ARL013][ARLE13][ARL014] [ARLE14]
-	62346-24101		WASHER	ﾜｯｼｬ	120	[ARL015][ARLE15][ARL016] [ARLE16]
-	62346-24101		WASHER	ﾜｯｼｬ	80	[ARL017][ARLE17][ARL018] [ARLE18]
-	62346-24101		WASHER	ﾜｯｼｬ	120	[ARL019][ARLE19][ARL020] [ARLE20]
-	62346-24101		WASHER	ﾜｯｼｬ	80	[ARL021][ARLE21][ARL022] [ARLE22]
-	62346-24101		WASHER	ﾜｯｼｬ	120	[ARL023][ARLE23][ARL024] [ARLE24]
-	62346-24101		WASHER	ﾜｯｼｬ	96	[ARL025][ARLE25][ARL026] [ARLE26]
-	62346-24101		WASHER	ﾜｯｼｬ	144	[ARL027][ARLE27][ARL028] [ARLE28]
-	62346-24101		WASHER	ﾜｯｼｬ	96	[ARL029][ARLE29][ARL030] [ARLE30]
-	62346-24101		WASHER	ﾜｯｼｬ	144	[ARL031][ARLE31][ARL032] [ARLE32]
-	62346-24101		WASHER	ﾜｯｼｬ	96	[ARL033][ARLE33][ARL034] [ARLE34]
-	62346-24101		WASHER	ﾜｯｼｬ	144	[ARL035][ARLE35][ARL036] [ARLE36]
34	01300-08032		BOLT	ﾎﾞﾙﾄ	48	[ARL001][ARLE01][ARL002] [ARLE02]
-	01300-08032		BOLT	ﾎﾞﾙﾄ	72	[ARL003][ARLE03][ARL004] [ARLE04]
-	01300-08032		BOLT	ﾎﾞﾙﾄ	64	[ARL005][ARLE05][ARL006] [ARLE06]
-	01300-08032		BOLT	ﾎﾞﾙﾄ	96	[ARL007][ARLE07][ARL008] [ARLE08]
-	01300-08032		BOLT	ﾎﾞﾙﾄ	64	[ARL009][ARLE09][ARL010] [ARLE10]
-	01300-08032		BOLT	ﾎﾞﾙﾄ	96	[ARL011][ARLE11][ARL012] [ARLE12]
-	01300-08032		BOLT	ﾎﾞﾙﾄ	80	[ARL013][ARLE13][ARL014] [ARLE14]
-	01300-08032		BOLT	ﾎﾞﾙﾄ	120	[ARL015][ARLE15][ARL016] [ARLE16]
-	01300-08032		BOLT	ﾎﾞﾙﾄ	80	[ARL017][ARLE17][ARL018] [ARLE18]
-	01300-08032		BOLT	ﾎﾞﾙﾄ	120	[ARL019][ARLE19][ARL020] [ARLE20]
-	01300-08032		BOLT	ﾎﾞﾙﾄ	80	[ARL021][ARLE21][ARL022] [ARLE22]

LOAD GRAB

FIG.56 [LG3A4,LG3B4,LG3C4,LG3D4,LG3E4,LG3F4]

(A503LG10) ﾛｰﾄﾞｸﾞﾗﾌﾞ

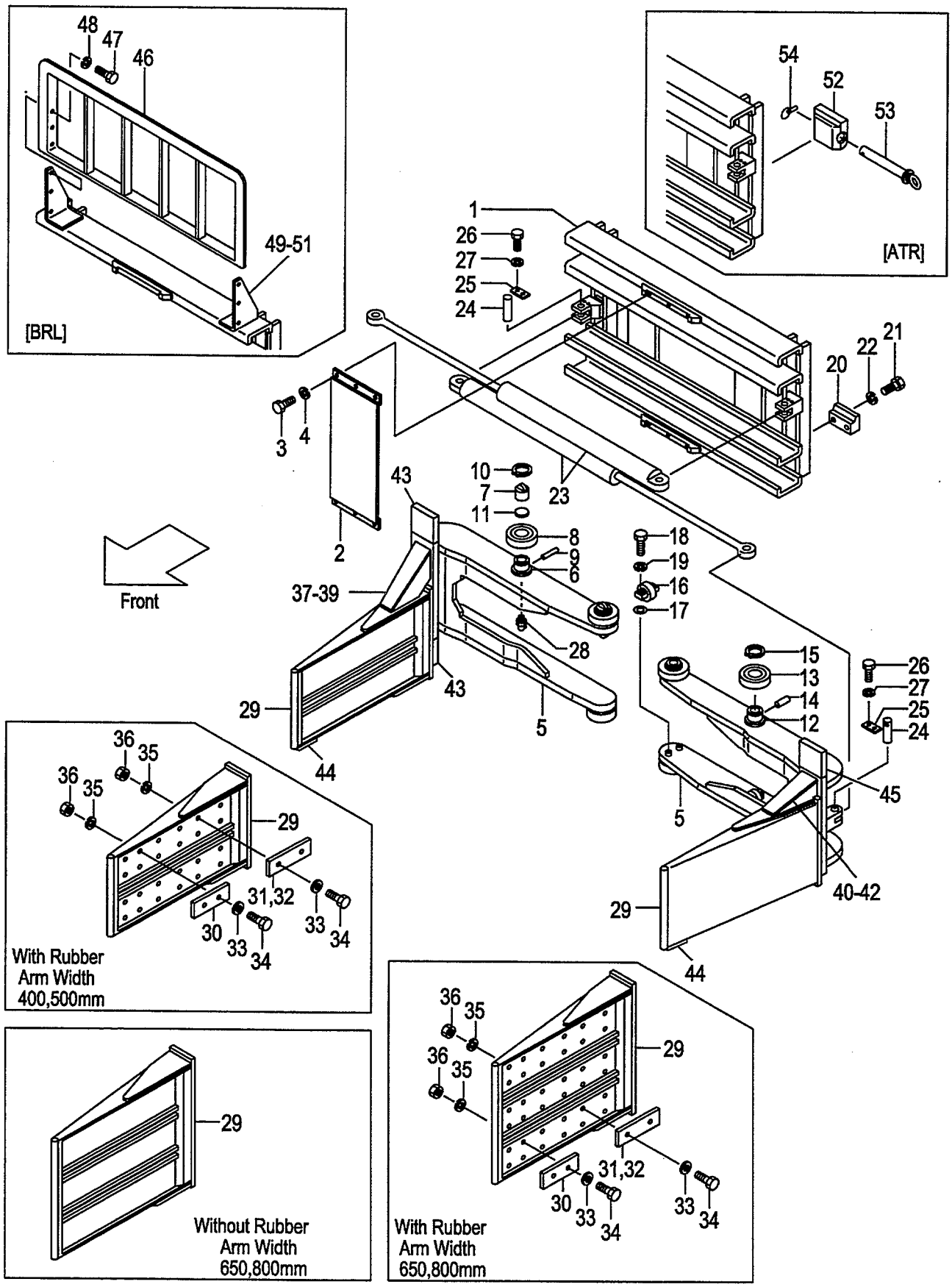

A:LG3A4(J) D:LG3D4(J)
B:LG3B4(J) E:LG3E4(J)
C:LG3C4(J) F:LG3F4(J)

FIG.56
(A503LG10)

Item No	Part No.	Mark	Description		Req'd	Remarks : Serial No.
-	01300-08032		BOLT	ﾎﾞﾙﾄ	120	[ARL023][ARLE23][ARL024] [ARLE24]
-	01300-08032		BOLT	ﾎﾞﾙﾄ	96	[ARL025][ARLE25][ARL026] [ARLE26]
-	01300-08032		BOLT	ﾎﾞﾙﾄ	144	[ARL027][ARLE27][ARL028] [ARLE28]
-	01300-08032		BOLT	ﾎﾞﾙﾄ	96	[ARL029][ARLE29][ARL030] [ARLE30]
-	01300-08032		BOLT	ﾎﾞﾙﾄ	144	[ARL031][ARLE31][ARL032] [ARLE32]
-	01300-08032		BOLT	ﾎﾞﾙﾄ	96	[ARL033][ARLE33][ARL034] [ARLE34]
-	01300-08032		BOLT	ﾎﾞﾙﾄ	144	[ARL035][ARLE35][ARL036] [ARLE36]
35	02010-00008		WASHER	ﾜｯｼｬ	48	[ARL001][ARLE01][ARL002] [ARLE02]
-	02010-00008		WASHER	ﾜｯｼｬ	72	[ARL003][ARLE03][ARL004] [ARLE04]
-	02010-00008		WASHER	ﾜｯｼｬ	64	[ARL005][ARLE05][ARL006] [ARLE06]
-	02010-00008		WASHER	ﾜｯｼｬ	96	[ARL007][ARLE07][ARL008] [ARLE08]
-	02010-00008		WASHER	ﾜｯｼｬ	64	[ARL009][ARLE09][ARL010] [ARLE10]
-	02010-00008		WASHER	ﾜｯｼｬ	96	[ARL011][ARLE11][ARL012] [ARLE12]
-	02010-00008		WASHER	ﾜｯｼｬ	80	[ARL013][ARLE13][ARL014] [ARLE14]
-	02010-00008		WASHER	ﾜｯｼｬ	120	[ARL015][ARLE15][ARL016] [ARLE16]
-	02010-00008		WASHER	ﾜｯｼｬ	80	[ARL017][ARLE17][ARL018] [ARLE18]
-	02010-00008		WASHER	ﾜｯｼｬ	120	[ARL019][ARLE19][ARL020] [ARLE20]
-	02010-00008		WASHER	ﾜｯｼｬ	80	[ARL021][ARLE21][ARL022] [ARLE22]
-	02010-00008		WASHER	ﾜｯｼｬ	120	[ARL023][ARLE23][ARL024] [ARLE24]
-	02010-00008		WASHER	ﾜｯｼｬ	96	[ARL025][ARLE25][ARL026] [ARLE26]
-	02010-00008		WASHER	ﾜｯｼｬ	144	[ARL027][ARLE27][ARL028] [ARLE28]
-	02010-00008		WASHER	ﾜｯｼｬ	96	[ARL029][ARLE29][ARL030] [ARLE30]
-	02010-00008		WASHER	ﾜｯｼｬ	144	[ARL031][ARLE31][ARL032] [ARLE32]
-	02010-00008		WASHER	ﾜｯｼｬ	96	[ARL033][ARLE33][ARL034] [ARLE34]
-	02010-00008		WASHER	ﾜｯｼｬ	144	[ARL035][ARLE35][ARL036] [ARLE36]

LOAD GRAB

FIG.56 [LG3A4,LG3B4,LG3C4,LG3D4,LG3E4,LG3F4]

(A503LG10) ﾛｰﾄﾞｸﾞﾗﾌﾞ

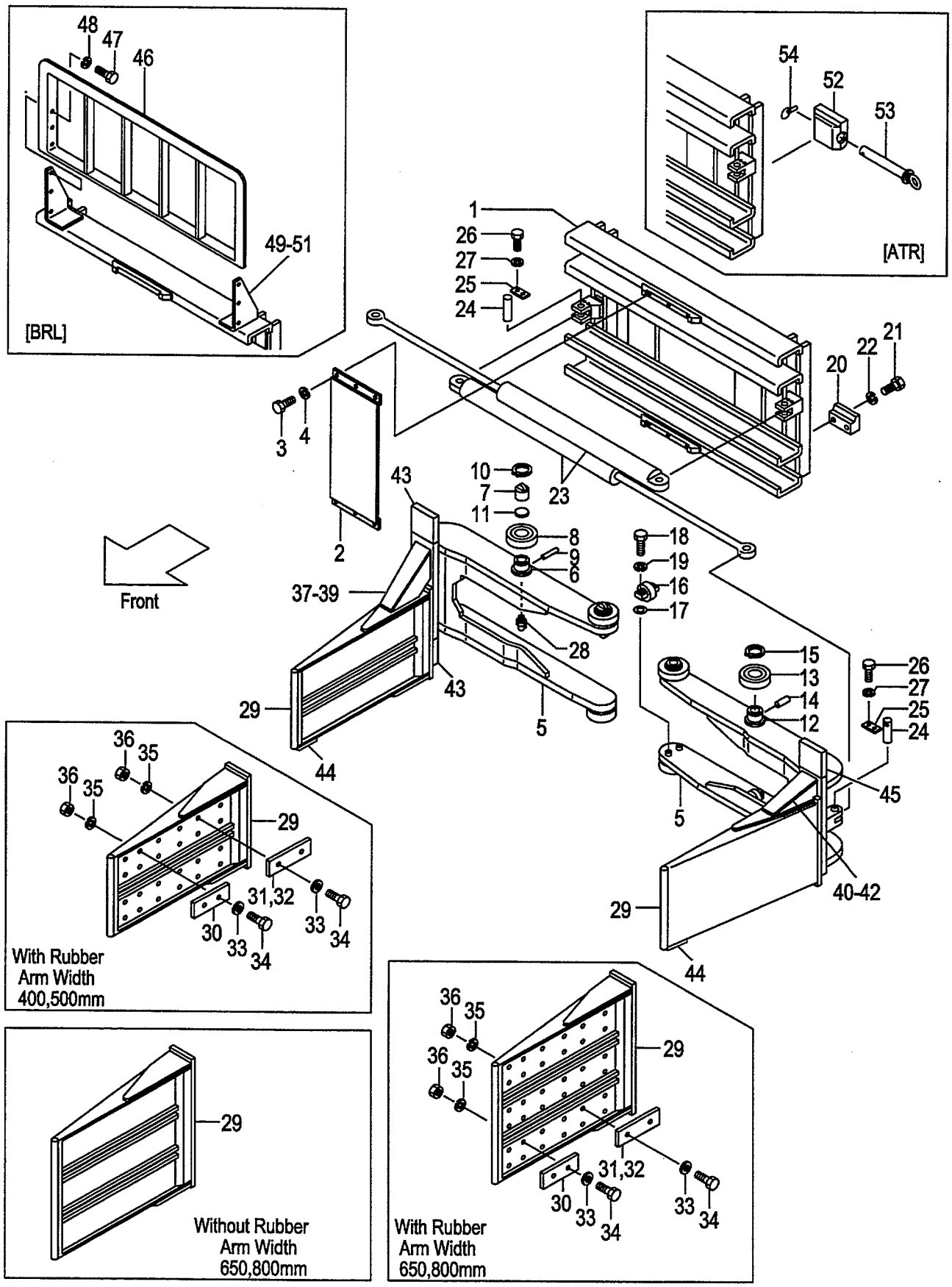

Item No	Part No.	Mark	Description		Req'd	Remarks : Serial No.
36	01400-00008		NUT	ﾅｯﾄ	48	[ARL001][ARLE01][ARL002] [ARLE02]
-	01400-00008		NUT	ﾅｯﾄ	72	[ARL003][ARLE03][ARL004] [ARLE04]
-	01400-00008		NUT	ﾅｯﾄ	64	[ARL005][ARLE05][ARL006] [ARLE06]
-	01400-00008		NUT	ﾅｯﾄ	96	[ARL007][ARLE07][ARL008] [ARLE08]
-	01400-00008		NUT	ﾅｯﾄ	64	[ARL009][ARLE09][ARL010] [ARLE10]
-	01400-00008		NUT	ﾅｯﾄ	96	[ARL011][ARLE11][ARL012] [ARLE12]
-	01400-00008		NUT	ﾅｯﾄ	80	[ARL013][ARLE13][ARL014] [ARLE14]
-	01400-00008		NUT	ﾅｯﾄ	120	[ARL015][ARLE15][ARL016] [ARLE16]
-	01400-00008		NUT	ﾅｯﾄ	80	[ARL017][ARLE17][ARL018] [ARLE18]
-	01400-00008		NUT	ﾅｯﾄ	120	[ARL019][ARLE19][ARL020] [ARLE20]
-	01400-00008		NUT	ﾅｯﾄ	80	[ARL021][ARLE21][ARL022] [ARLE22]
-	01400-00008		NUT	ﾅｯﾄ	120	[ARL023][ARLE23][ARL024] [ARLE24]
-	01400-00008		NUT	ﾅｯﾄ	96	[ARL025][ARLE25][ARL026] [ARLE26]
-	01400-00008		NUT	ﾅｯﾄ	144	[ARL027][ARLE27][ARL028] [ARLE28]
-	01400-00008		NUT	ﾅｯﾄ	96	[ARL029][ARLE29][ARL030] [ARLE30]
-	01400-00008		NUT	ﾅｯﾄ	144	[ARL031][ARLE31][ARL032] [ARLE32]
-	01400-00008		NUT	ﾅｯﾄ	96	[ARL033][ARLE33][ARL034] [ARLE34]
-	01400-00008		NUT	ﾅｯﾄ	144	[ARL035][ARLE35][ARL036] [ARLE36]
37	62246-24541		PLATE	ﾌﾟﾚｰﾄ	1	[ARL001][ARL005][ARL009] [ARL013][ARL017][ARL021] [ARL025][ARL029][ARL033] [ARL037][ARL041][ARL045] [ARL049][ARL053][ARL057] [ARL061][ARL065][ARL069]
-	62246-24101		PLATE	ﾌﾟﾚｰﾄ	1	[ARL002][ARL006][ARL010] [ARL014][ARL018][ARL022] [ARL026][ARL030][ARL034] [ARL038][ARL042][ARL046] [ARL050][ARL054][ARL058] [ARL062][ARL066][ARL070]
-	62246-24131		PLATE	ﾌﾟﾚｰﾄ	1	[ARLE01][ARLE05][ARLE09] [ARLE13][ARLE17][ARLE21]

LOAD GRAB

FIG.56 [LG3A4,LG3B4,LG3C4,LG3D4,LG3E4,LG3F4]

(A503LG10) ﾛｰﾄﾞｸﾞﾗﾌﾞ

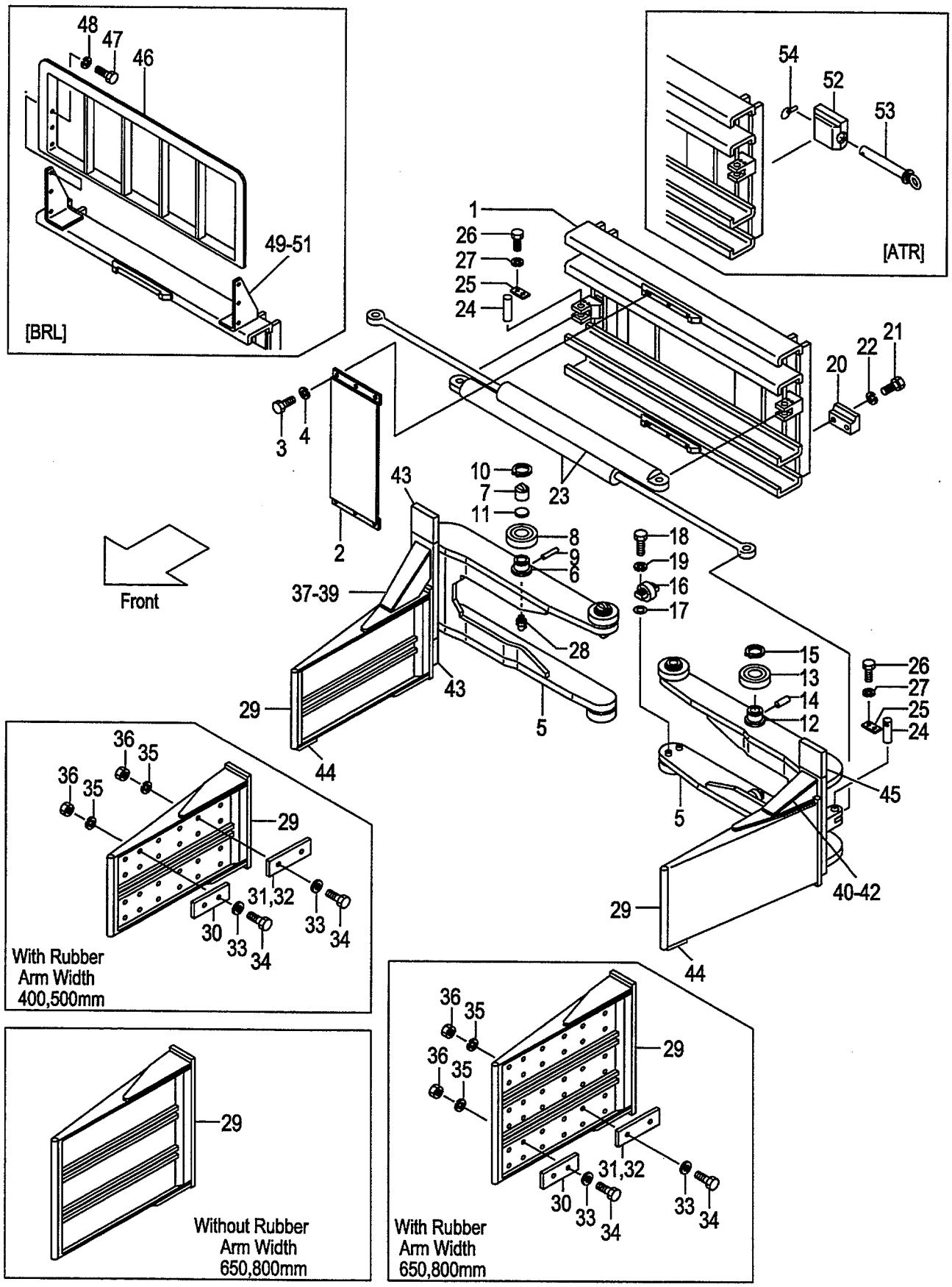

A:LG3A4(J) D:LG3D4(J)
B:LG3B4(J) E:LG3E4(J)
C:LG3C4(J) F:LG3F4(J)

FIG.56
(A503LG10)

Item No	Part No.	Mark	Description	Req'd	Remarks : Serial No.
-	62246-24561		PLATE プレート	1	[ARLE25][ARLE29][ARLE33] [ARLE37][ARLE41][ARLE45] [ARLE49][ARLE53][ARLE57] [ARLE61][ARLE65][ARLE69] [ARLE02][ARLE06][ARLE10] [ARLE14][ARLE18][ARLE22] [ARLE26][ARLE30][ARLE34] [ARLE38][ARLE42][ARLE46] [ARLE50][ARLE54][ARLE58] [ARLE62][ARLE66][ARLE70]
38	62246-24551		PLATE プレート	1	[ARL001][ARL005][ARL009] [ARL013][ARL017][ARL021] [ARL025][ARL029][ARL033] [ARL037][ARL041][ARL045] [ARL049][ARL053][ARL057] [ARL061][ARL065][ARL069]
-	62246-24111		PLATE プレート	1	[ARL002][ARL006][ARL010] [ARL014][ARL018][ARL022] [ARL026][ARL030][ARL034] [ARL038][ARL042][ARL046] [ARL050][ARL054][ARL058] [ARL062][ARL066][ARL070]
-	62246-24141		PLATE プレート	1	[ARLE01][ARLE05][ARLE09] [ARLE13][ARLE17][ARLE21] [ARLE25][ARLE29][ARLE33] [ARLE37][ARLE41][ARLE45] [ARLE49][ARLE53][ARLE57] [ARLE61][ARLE65][ARLE69]
-	62246-24551		PLATE プレート	1	[ARLE02][ARLE06][ARLE10] [ARLE14][ARLE18][ARLE22] [ARLE26][ARLE30][ARLE34] [ARLE38][ARLE42][ARLE46] [ARLE50][ARLE54][ARLE58] [ARLE62][ARLE66][ARLE70]
39	62246-24561		PLATE プレート	1	[ARL001][ARL005][ARL009] [ARL013][ARL017][ARL021] [ARL025][ARL029][ARL033] [ARL037][ARL041][ARL045] [ARL049][ARL053][ARL057] [ARL061][ARL065][ARL069]
-	62246-24121		PLATE プレート	1	[ARL002][ARL006][ARL010] [ARL014][ARL018][ARL022] [ARL026][ARL030][ARL034] [ARL038][ARL042][ARL046] [ARL050][ARL054][ARL058] [ARL062][ARL066][ARL070]
-	62246-24151		PLATE プレート	1	[ARLE01][ARLE05][ARLE09] [ARLE13][ARLE17][ARLE21] [ARLE25][ARLE29][ARLE33] [ARLE37][ARLE41][ARLE45]

LOAD GRAB

FIG.56 [LG3A4,LG3B4,LG3C4,LG3D4,LG3E4,LG3F4]

(A503LG10) ﾛｰﾄﾞｸﾞﾗﾌﾞ

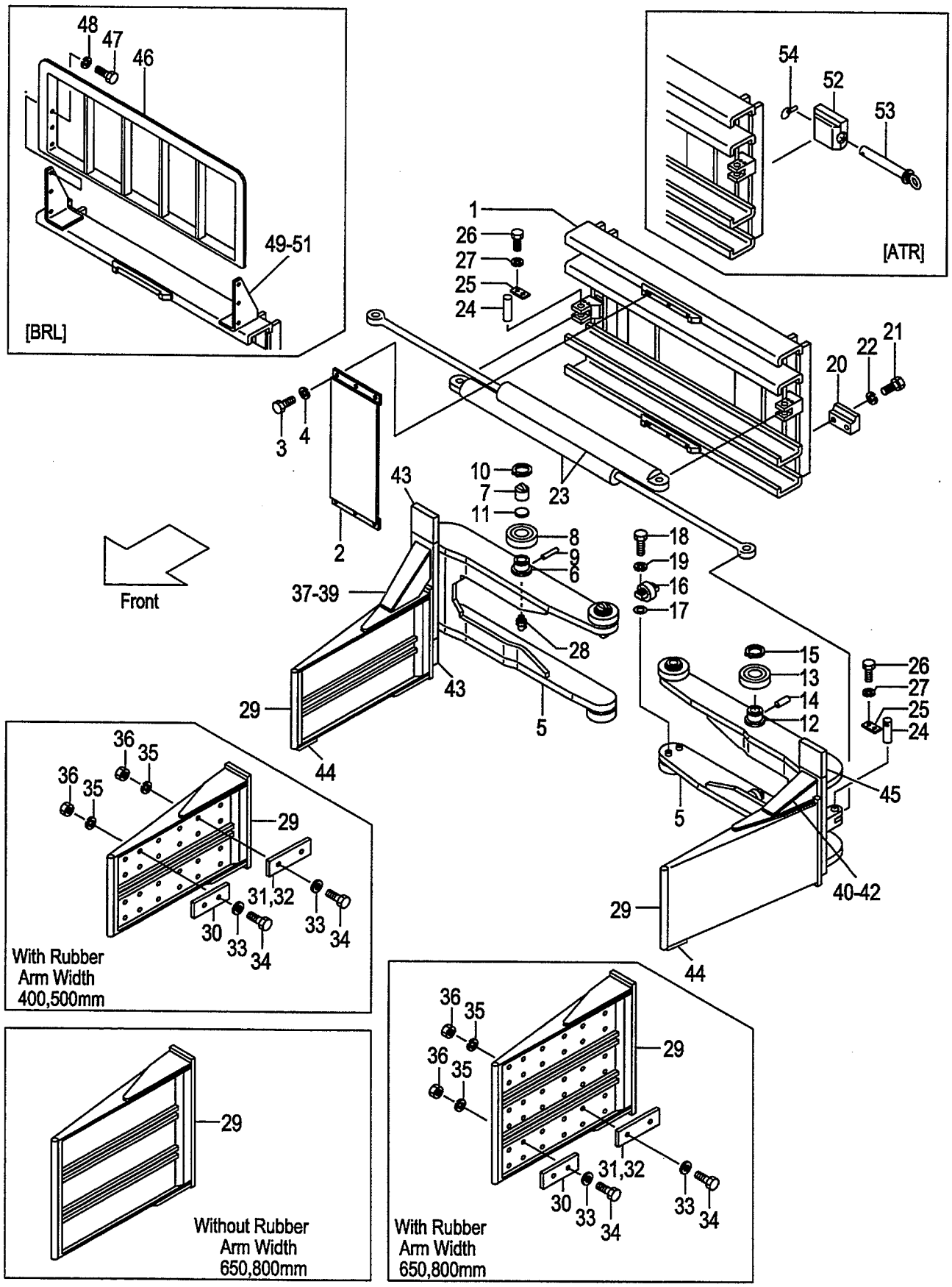

Item No	Part No.	Mark	Description		Req'd	Remarks : Serial No.
						[ARLE49][ARLE53][ARLE57]
						[ARLE61][ARLE65][ARLE69]
-	62246-24541		PLATE	ﾌﾟﾚｰﾄ	1	[ARLE02][ARLE06][ARLE10]
						[ARLE14][ARLE18][ARLE22]
						[ARLE26][ARLE30][ARLE34]
						[ARLE38][ARLE42][ARLE46]
						[ARLE50][ARLE54][ARLE58]
						[ARLE62][ARLE66][ARLE70]
40	62246-24101		PLATE	ﾌﾟﾚｰﾄ	1	[ARL001][ARL005][ARL009]
						[ARL013][ARL017][ARL021]
						[ARL025][ARL029][ARL033]
						[ARL037][ARL041][ARL045]
						[ARL049][ARL053][ARL057]
						[ARL061][ARL065][ARL069]
						[ARLE01][ARLE05][ARLE09]
						[ARLE13][ARLE17][ARLE21]
						[ARLE25][ARLE29][ARLE33]
						[ARLE37][ARLE41][ARLE45]
						[ARLE49][ARLE53][ARLE57]
						[ARLE61][ARLE65][ARLE69]
41	62246-24111		PLATE	ﾌﾟﾚｰﾄ	1	[ARL001][ARL005][ARL009]
						[ARL013][ARL017][ARL021]
						[ARL025][ARL029][ARL033]
						[ARL037][ARL041][ARL045]
						[ARL049][ARL053][ARL057]
						[ARL061][ARL065][ARL069]
						[ARLE01][ARLE05][ARLE09]
						[ARLE13][ARLE17][ARLE21]
						[ARLE25][ARLE29][ARLE33]
						[ARLE37][ARLE41][ARLE45]
						[ARLE49][ARLE53][ARLE57]
						[ARLE61][ARLE65][ARLE69]
42	62246-24121		PLATE	ﾌﾟﾚｰﾄ	1	[ARL001][ARL005][ARL009]
						[ARL013][ARL017][ARL021]
						[ARL025][ARL029][ARL033]
						[ARL037][ARL041][ARL045]
						[ARL049][ARL053][ARL057]
						[ARL061][ARL065][ARL069]
						[ARLE01][ARLE05][ARLE09]
						[ARLE13][ARLE17][ARLE21]
						[ARLE25][ARLE29][ARLE33]
						[ARLE37][ARLE41][ARLE45]
						[ARLE49][ARLE53][ARLE57]
						[ARLE61][ARLE65][ARLE69]
43	62246-24521		PLATE,LOWER,RH	ﾌﾟﾚｰﾄ	1	[ARLE01-ARLE72]
-	62246-24521		PLATE,UPPER,RH	ﾌﾟﾚｰﾄ	1	[ARL004][ARL008][ARL012]
						[ARL016][ARL020][ARL024]
						[ARL028][ARL032][ARL036]
						[ARL040][ARL044][ARL048]

LOAD GRAB

FIG.56 [LG3A4,LG3B4,LG3C4,LG3D4,LG3E4,LG3F4]

(A503LG10) ﾛｰﾄﾞｸﾞﾗﾌﾞ

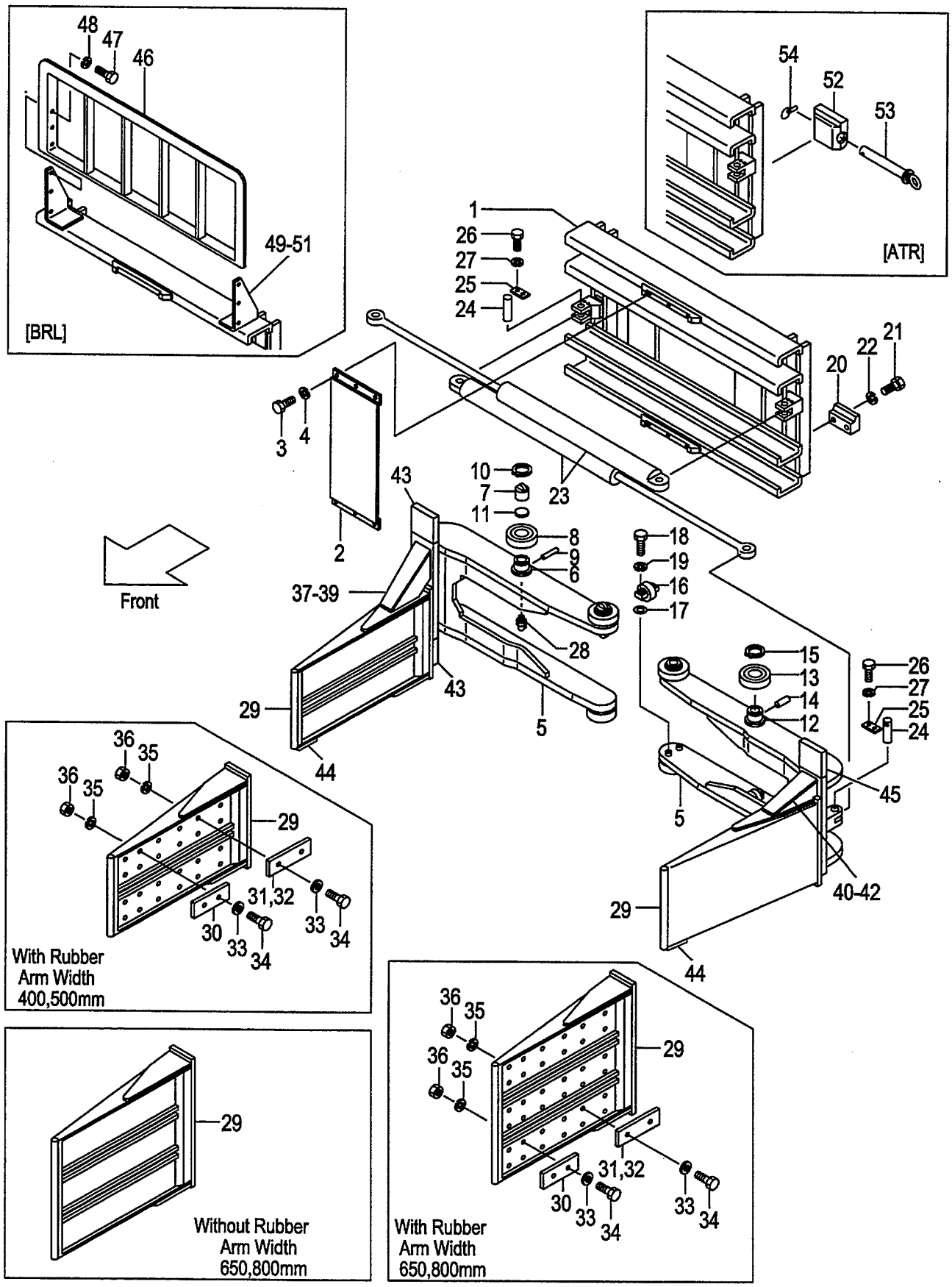

A:LG3A4(J) D:LG3D4(J)
B:LG3B4(J) E:LG3E4(J)
C:LG3C4(J) F:LG3F4(J)

FIG.56
(A503LG10)

Item No	Part No.	Mark	Description		Req'd	Remarks : Serial No.
						[ARL052][ARL056][ARL060]
						[ARL064][ARL068][ARL072]
-	62246-24521		PLATE,UPPER,RH	ﾌﾟﾚｰﾄ	2	[ARLE04][ARLE08][ARLE12]
						[ARLE16][ARLE20][ARLE24]
						[ARLE28][ARLE32][ARLE36]
						[ARLE40][ARLE44][ARLE48]
						[ARLE52][ARLE56][ARLE60]
						[ARLE64][ARLE68][ARLE72]
44	62246-24531		PLATE	ﾌﾟﾚｰﾄ	2	[ARLE01-ARLE72]
45	62246-24521		PLATE,LOWER,LH	ﾌﾟﾚｰﾄ	1	[ARL003][ARL007][ARL011]
						[ARL015][ARL019][ARL023]
						[ARL027][ARL031][ARL035]
						[ARL039][ARL043][ARL047]
						[ARL051][ARL055][ARL059]
						[ARL063][ARL067][ARL071]
						[ARL004][ARL008][ARL012]
						[ARL016][ARL020][ARL024]
						[ARL028][ARL032][ARL036]
						[ARL040][ARL044][ARL048]
						[ARL052][ARL056][ARL060]
						[ARL064][ARL068][ARL072]
						[ARLE04][ARLE08][ARLE12]
						[ARLE16][ARLE20][ARLE24]
						[ARLE28][ARLE32][ARLE36]
						[ARLE40][ARLE44][ARLE48]
						[ARLE52][ARLE56][ARLE60]
						[ARLE64][ARLE68][ARLE72]
46	62246-20801		REST,BACK	ﾊﾞｯｸﾚｽﾄ	1	[BRL120]
-	62246-20811		REST,BACK	ﾊﾞｯｸﾚｽﾄ	1	[BRL130]
-	62246-20821		REST,BACK	ﾊﾞｯｸﾚｽﾄ	1	B,C,E,F
						[BRL140]
-	62246-20831		REST,BACK	ﾊﾞｯｸﾚｽﾄ	1	C,F
						[BRL150]
47	01103-12025		BOLT	ﾎﾞﾙﾄ	6	[BRL]
48	02011-00012		WASHER	ﾜｯｼｬ	6	[BRL]
49	63146-22801		PLATE,TAPPED	ﾌﾟﾚｰﾄ	2	[BRL]
50	62246-23881		BRACKET	ﾌﾞﾗｹｯﾄ	1	[BRL]
51	62246-23891		BRACKET	ﾌﾞﾗｹｯﾄ	1	[BRL]
52	63039-12631		GUIDE	ｶﾞｲﾄﾞ	2	[ATR]
53	62039-12691		PIN	ﾋﾟﾝ	2	[ATR]
54	62039-12751		PIN	ﾋﾟﾝ	2	[ATR]
55	62039-12641	+	BRACKET	ﾌﾞﾗｹｯﾄ	4	[ATR]
56	63130-26160	+	VALVE,RELIEF	ﾊﾞﾙﾌﾞ	1	[ARL021-ARL024]
						[ARL026-ARL028][ARL057-ARL060]
						[ARL062-ARL064]
						[ARLE21-ARLE24]
						[ARLE26-ARLE28]
						[ARLE57-ARLE60]
						[ARLE62-ARLE64]

LOAD GRAB

FIG.56 [LG3A4,LG3B4,LG3C4,LG3D4,LG3E4,LG3F4]

(A503LG10) ﾛｰﾄﾞｸﾞﾗﾌﾞ

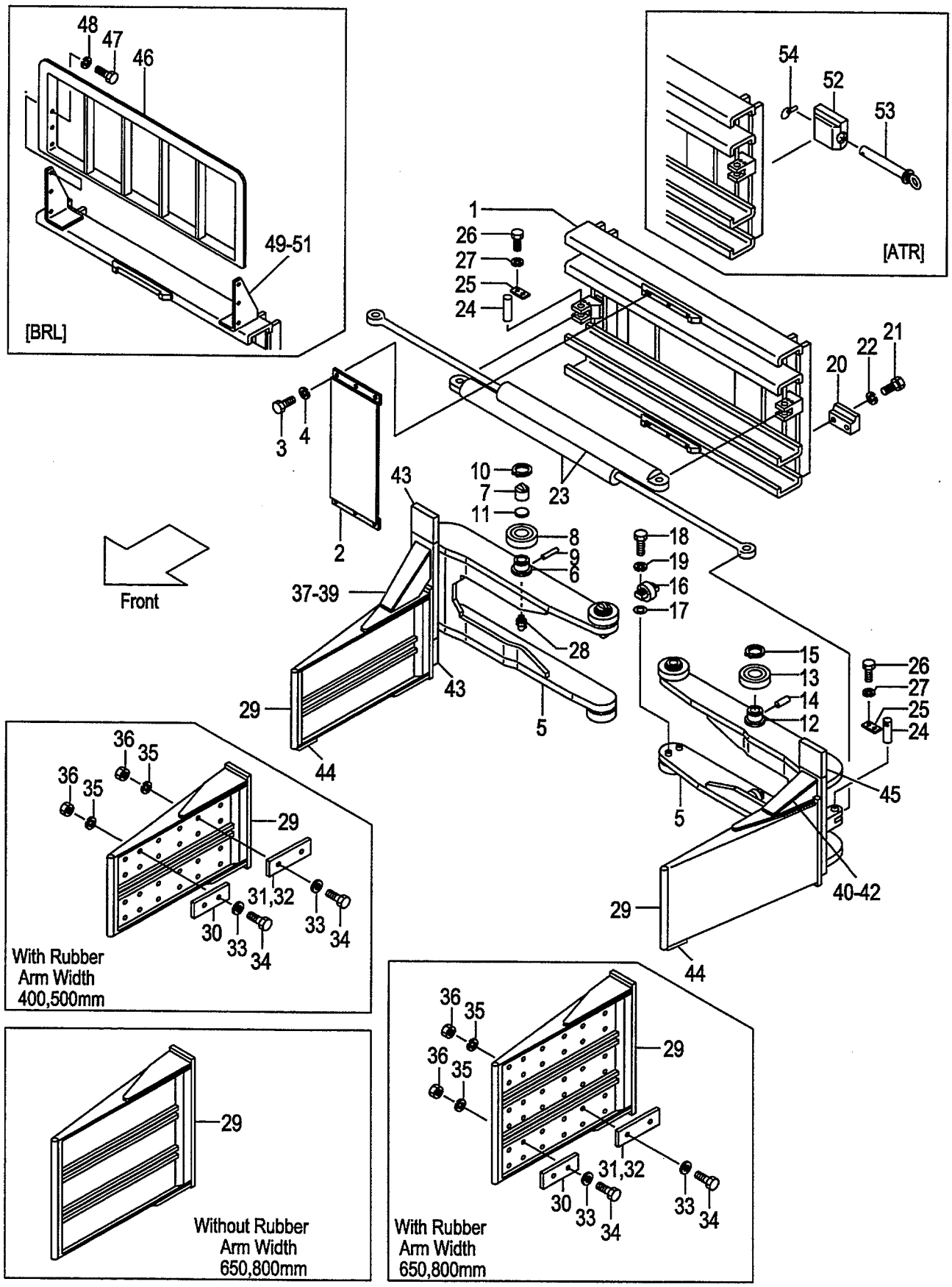

A:LG3A4(J) D:LG3D4(J)
B:LG3B4(J) E:LG3E4(J)
C:LG3C4(J) F:LG3F4(J)

FIG.56
(A503LG10)

Item No	Part No.	Mark	Description		Req'd	Remarks : Serial No.
-	63130-26145	+	VALVE,RELIEF	ﾊﾞﾙﾌﾞ	1	[ARL025][ARL029-ARL032]
						[ARL061][ARL065-ARL068]
						[ARLE25][ARLE29-ARLE32]
						[ARLE61][ARLE65-ARLE68]
-	63130-26130	+	VALVE,RELIEF	ﾊﾞﾙﾌﾞ	1	[ARL033-ARL036]
						[ARL069-ARL072]
						[ARLE33-ARLE36]
						[ARLE69-ARLE72]
57	63110-18901	+	CHART,LOAD	ﾁｬｰﾄ	1	
-	514A3-82301	+	CHART,LOAD	ﾁｬｰﾄ	1	[EXB/ENGLISH][EXC/ENGLISH]
-	514A3-82301	+	CHART,LOAD	ﾁｬｰﾄ	1	[EXE/ENGLISH][EXN/ENGLISH]
-	63110-18911	+	CHART,LOAD	ﾁｬｰﾄ	1	[EXA/ENGLISH]
-	524T3-84031	+	CHART,LOAD	ﾁｬｰﾄ	1	(RUSSIAN)
-	63110-18921	+	CHART,LOAD	ﾁｬｰﾄ	1	(CHINESE)
-	514A3-82321	+	CHART,LOAD	ﾁｬｰﾄ	1	(GERMAN)
-	514A3-82341	+	CHART,LOAD	ﾁｬｰﾄ	1	(FRENCH)
-	514A3-82331	+	CHART,LOAD	ﾁｬｰﾄ	1	(SPANISH)
-	514A3-82361	+	CHART,LOAD	ﾁｬｰﾄ	1	(DANISH)
-	514A3-82381	+	CHART,LOAD	ﾁｬｰﾄ	1	(GREEK)
-	514A3-82371	+	CHART,LOAD	ﾁｬｰﾄ	1	(ITALIAN)
-	514A3-82351	+	CHART,LOAD	ﾁｬｰﾄ	1	(DUTCH)
-	514A3-82391	+	CHART,LOAD	ﾁｬｰﾄ	1	(PORTUGUESE)
58	02432-01008	+	RIVET	ﾘﾍﾞｯﾄ	4	
59	09210-10300	+	PLATE,NAME	ﾌﾟﾚｰﾄ	1	
-	63110-19201	+	PLATE,NAME	ﾌﾟﾚｰﾄ	1	[EXA/ENGLISH][EXB/ENGLISH]
-	63110-19201	+	PLATE,NAME	ﾌﾟﾚｰﾄ	1	[EXC/ENGLISH][EXE/ENGLISH]
-	63110-19201	+	PLATE,NAME	ﾌﾟﾚｰﾄ	1	A,E,F
						[EXN/ENGLISH]
-	63110-32111	+	PLATE,NAME	ﾌﾟﾚｰﾄ	1	(RUSSIAN)
-	09201-06201	+	PLATE,NAME	ﾌﾟﾚｰﾄ	1	(CHINESE)
-	63110-19221	+	PLATE,NAME	ﾌﾟﾚｰﾄ	1	(GERMAN)
-	63110-19261	+	PLATE,NAME	ﾌﾟﾚｰﾄ	1	(FRENCH)
-	63110-19241	+	PLATE,NAME	ﾌﾟﾚｰﾄ	1	(SPANISH)
-	63110-19301	+	PLATE,NAME	ﾌﾟﾚｰﾄ	1	(DANISH)
-	63110-19341	+	PLATE,NAME	ﾌﾟﾚｰﾄ	1	(GREEK)
-	63110-19321	+	PLATE,NAME	ﾌﾟﾚｰﾄ	1	(ITALIAN)
-	63110-19281	+	PLATE,NAME	ﾌﾟﾚｰﾄ	1	(DUTCH)
-	63110-19361	+	PLATE,NAME	ﾌﾟﾚｰﾄ	1	(PORTUGUESE)
60	62246-27001	+	PLATE,CAUTION	ﾌﾟﾚｰﾄ	1	
-	63110-18521	+	PLATE,CAUTION	ﾌﾟﾚｰﾄ	1	(ENGLISH)
-	63110-32121	+	PLATE,CAUTION	ﾌﾟﾚｰﾄ	1	(RUSSIAN)
-	63110-18511	+	PLATE,CAUTION	ﾌﾟﾚｰﾄ	1	(CHINESE)
-	63110-19371	+	PLATE,CAUTION	ﾌﾟﾚｰﾄ	1	(GERMAN)
-	63110-19391	+	PLATE,CAUTION	ﾌﾟﾚｰﾄ	1	(FRENCH)
-	63110-19411	+	PLATE,CAUTION	ﾌﾟﾚｰﾄ	1	(SPANISH)
-	63110-19381	+	PLATE,CAUTION	ﾌﾟﾚｰﾄ	1	(DANISH)
-	63110-19441	+	PLATE,CAUTION	ﾌﾟﾚｰﾄ	1	(GREEK)
-	63110-19431	+	PLATE,CAUTION	ﾌﾟﾚｰﾄ	1	(ITALIAN)
-	63110-19401	+	PLATE,CAUTION	ﾌﾟﾚｰﾄ	1	(DUTCH)
-	63110-19421	+	PLATE,CAUTION	ﾌﾟﾚｰﾄ	1	(PORTUGUESE)

LOAD GRAB

FIG.56 [LG3A4,LG3B4,LG3C4,LG3D4,LG3E4,LG3F4]

(A503LG10) ﾛｰﾄﾞｸﾞﾗﾌﾞ

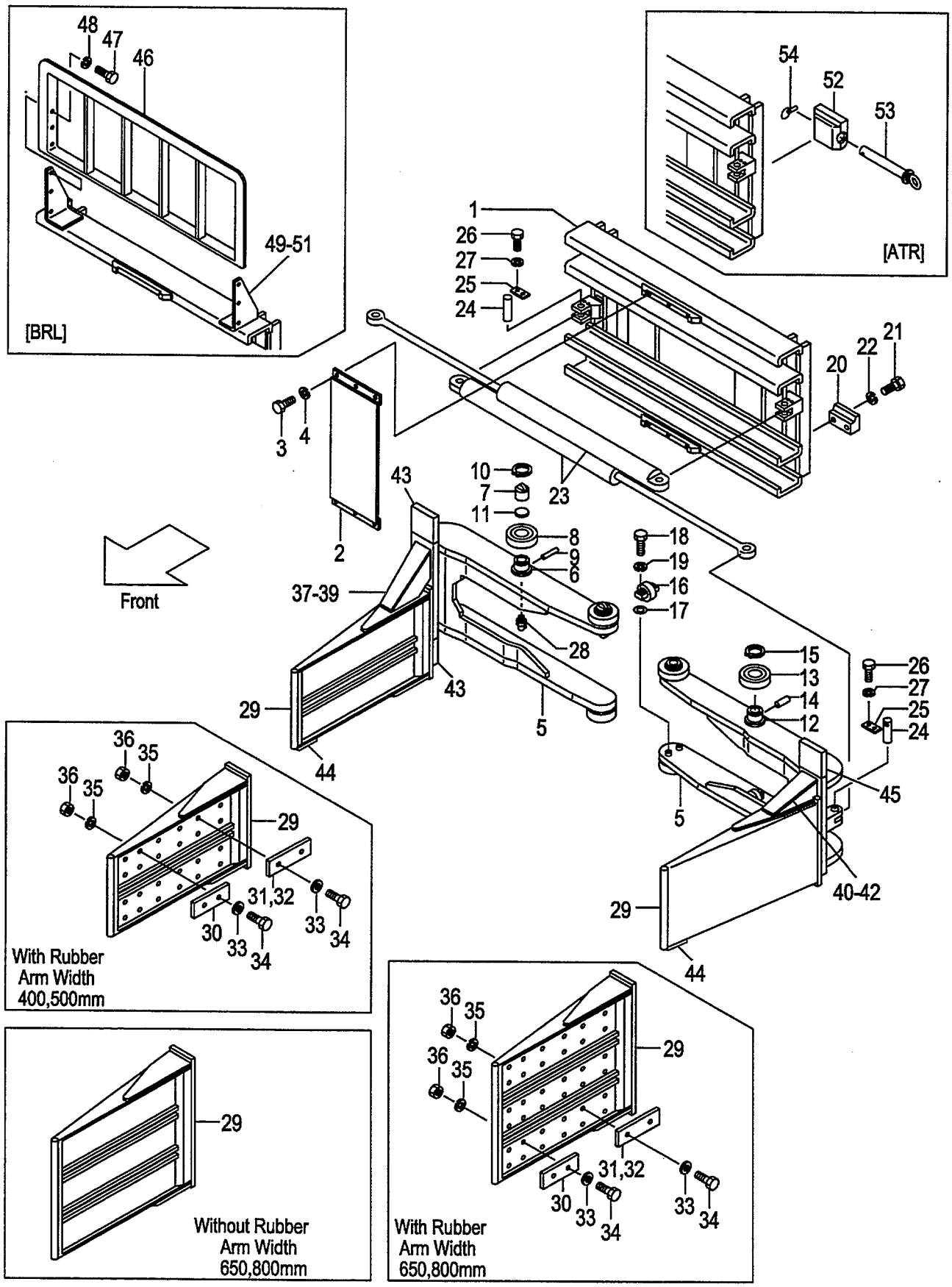

A:LG3A4(J) D:LG3D4(J)
B:LG3B4(J) E:LG3E4(J)
C:LG3C4(J) F:LG3F4(J)

FIG.56
(A503LG10)

Item No	Part No.	Mark	Description		Req'd	Remarks : Serial No.
61	63110-19151	+	PLATE,CAUTION	ﾌﾟﾚｰﾄ	1	[4DK]
62	63110-19921	+	DECAL	ﾃﾞｶﾙ	1	
63	63110-19131	+	KNOB	ﾉﾌﾞ	2	
64	63110-19931	+	DECAL	ﾃﾞｶﾙ	1	
65	63130-26011	+	SECTION,PLUNGER	ｾｸｼｮﾝ	1	
66	27419-12072	+	DECAL,CAUTION	ﾃﾞｶﾙ	1	

FIG.57 CYLINDER [LG3A4,LG3B4,LG3C4,LG3D4,LG3E4,LG3F4]

(A503LG20) シリンダ

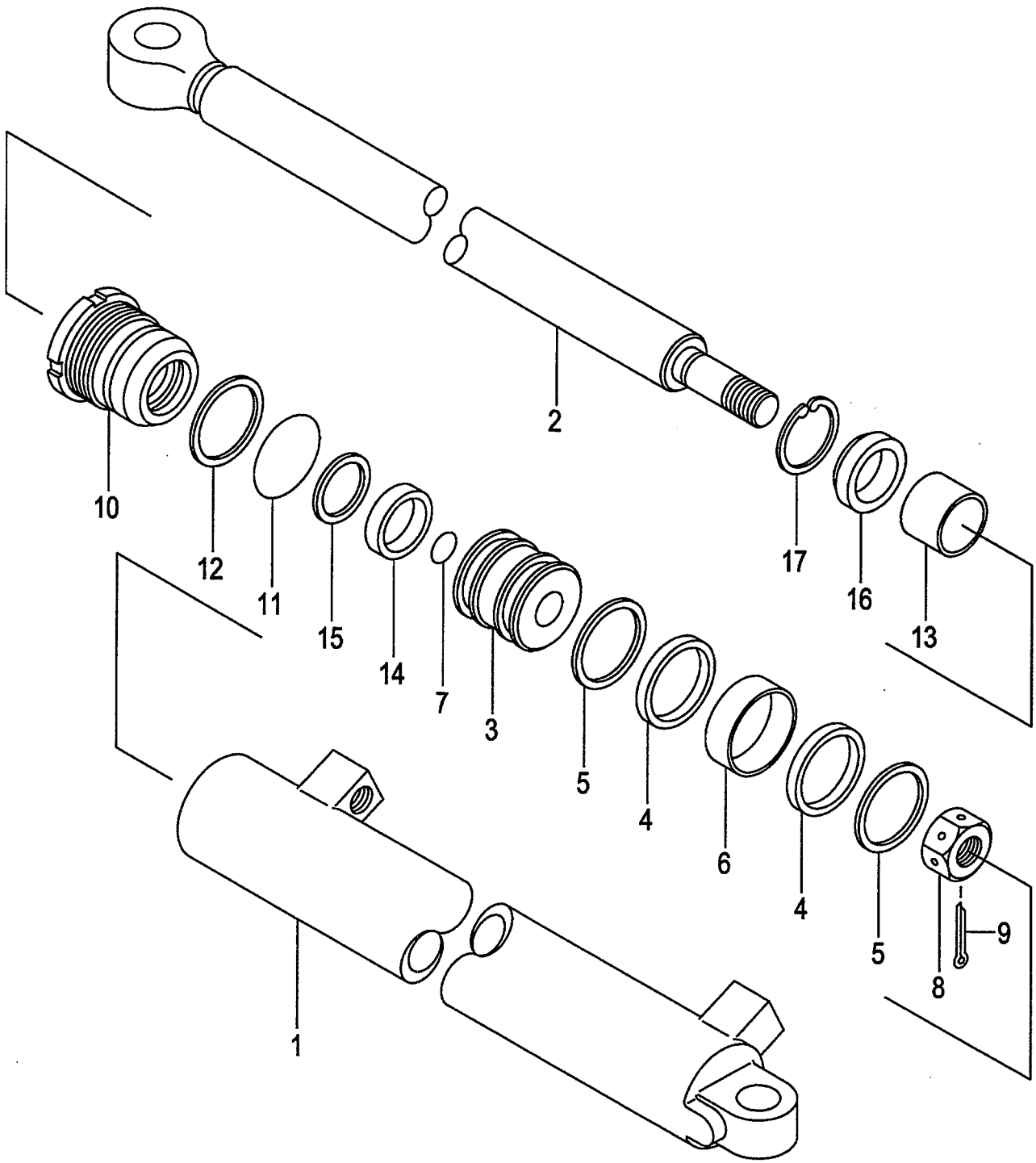

A:LG3A4(J) D:LG3D4(J)
B:LG3B4(J) E:LG3E4(J)
C:LG3C4(J) F:LG3F4(J)

FIG.57
(A503LG20)

Item No	Part No.	Mark	Description		Req'd	Remarks : Serial No.
A1	63136-20901		CYL-ASSY	ｼﾘﾝﾀﾞｱｯｾﾝ	2	A,D (STROKE:800) INC.1-17
-	63136-21001		CYL-ASSY	ｼﾘﾝﾀﾞｱｯｾﾝ	2	B,E (STROKE:850) INC.1-17
-	63136-21011		CYL-ASSY	ｼﾘﾝﾀﾞｱｯｾﾝ	2	C,F (STROKE:900) INC.1-17
1	63136-20911		TUBE	ﾁｭｰﾌﾞ	2	A,D (STROKE:800)
-	63136-21101		TUBE	ﾁｭｰﾌﾞ	2	B,E (STROKE:850)
-	63136-21111		TUBE	ﾁｭｰﾌﾞ	2	C,F (STROKE:900)
2	63136-20921		ROD,PISTON	ﾛｯﾄﾞ	2	A,D (STROKE:800)
-	63136-21201		ROD,PISTON	ﾛｯﾄﾞ	2	B,E (STROKE:850)
-	63136-21211		ROD,PISTON	ﾛｯﾄﾞ	2	C,F (STROKE:900)
3	64536-12241		PISTON	ﾋﾟｽﾄﾝ	2	
4	22439-43711		PACKING	ﾊﾟｯｷﾝｸﾞ	4	
5	24238-42031		RING,BACK-UP	ﾘﾝｸﾞ	4	
6	23238-40141		WEARING	ｳｴｱﾘﾝｸﾞ	2	
7	03320-00200		O-RING	Oﾘﾝｸﾞ	2	
8	62036-22261		NUT	ﾅｯﾄ	2	
9	02200-05050		PIN,COTTER	ﾋﾟﾝ	2	
10	63136-23201		CAP	ｷｬｯﾌﾟ	2	
11	62036-23211		O-RING	Oﾘﾝｸﾞ	2	
12	62036-23221		RING,BACK-UP	ﾘﾝｸﾞ	2	
13	23650-52841		BUSH	ﾌﾞｯｼﾝｸﾞ	2	
14	23650-52851		PACKING	ﾊﾟｯｷﾝｸﾞ	2	
15	23650-52861		RING,BACK-UP	ﾘﾝｸﾞ	2	
16	23650-52871		SEAL,DUST	ｼｰﾙ	2	
17	27838-52101		RING,SNAP	ｽﾅｯﾌﾟﾘﾝｸﾞ	2	

FIG.58 HYDRAULIC LINE (CONNECTOR-CYLINDER)

(A503LG30) ﾊｲﾄﾞﾛﾘｯｸﾗｲﾝ (ｺﾈｸﾀｰｼﾘﾝﾀﾞｰ)

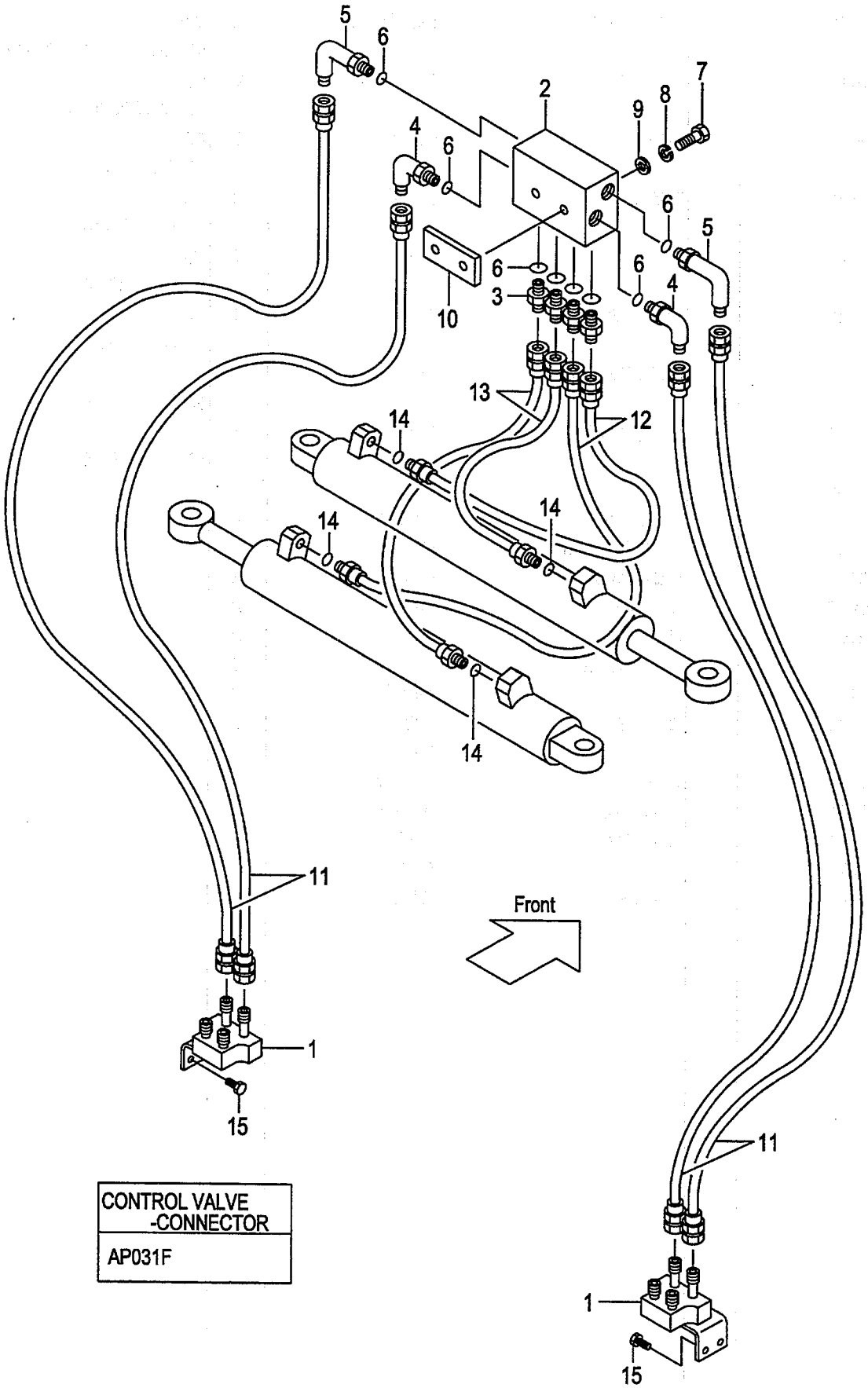

CONTROL VALVE -CONNECTOR
AP031F

A:LG3A4(J) D:LG3D4(J)
B:LG3B4(J) E:LG3E4(J)
C:LG3C4(J) F:LG3F4(J)

FIG.58
(A503LG30)

Item No	Part No.	Mark	Description		Req'd	Remarks : Serial No.
1	63110-14661		STUD	ｽﾀｯﾄﾞ	2	
2	63130-16432		VALVE,CHECK	ﾊﾞﾙﾌﾞ	1	
3	04134-00303		NIPPLE	ﾆｯﾌﾟﾙ	4	
4	04150-00303		ELBOW	ｴﾙﾎﾞ	2	
5	04150-10303		ELBOW	ｴﾙﾎﾞ	2	
6	03320-00140		O-RING	Oﾘﾝｸﾞ	8	
7	01100-08050		BOLT	ﾎﾞﾙﾄ	2	
8	02010-00008		WASHER	ﾜｯｼｬ	2	
9	02000-00008		WASHER	ﾜｯｼｬ	2	
10	63146-22801		PLATE	ﾌﾟﾚｰﾄ	1	
11	63130-21070		HOSE	ﾎｰｽ	4	
12	63130-22070		HOSE	ﾎｰｽ	2	
13	63130-22075		HOSE	ﾎｰｽ	2	A,D (RAIL WIDTH 1350)
-	63130-22080		HOSE	ﾎｰｽ	2	B,E (RAIL WIDTH 1450)
-	63130-22085		HOSE	ﾎｰｽ	2	C,F (RAIL WIDTH 1550)
14	03320-00140		O-RING	Oﾘﾝｸﾞ	4	
15	01184-10025		BOLT & WASHER	ﾎﾞﾙﾄ&ﾜｯｼｬ	4	

FIG.59 HYDRAULIC LINE (CONNECTOR-CYLINDER)[4DK]

(A503LG40) ﾊｲﾄﾞﾛﾘｯｸﾗｲﾝ (ｺﾈｸﾀｰｼﾘﾝﾀﾞ)

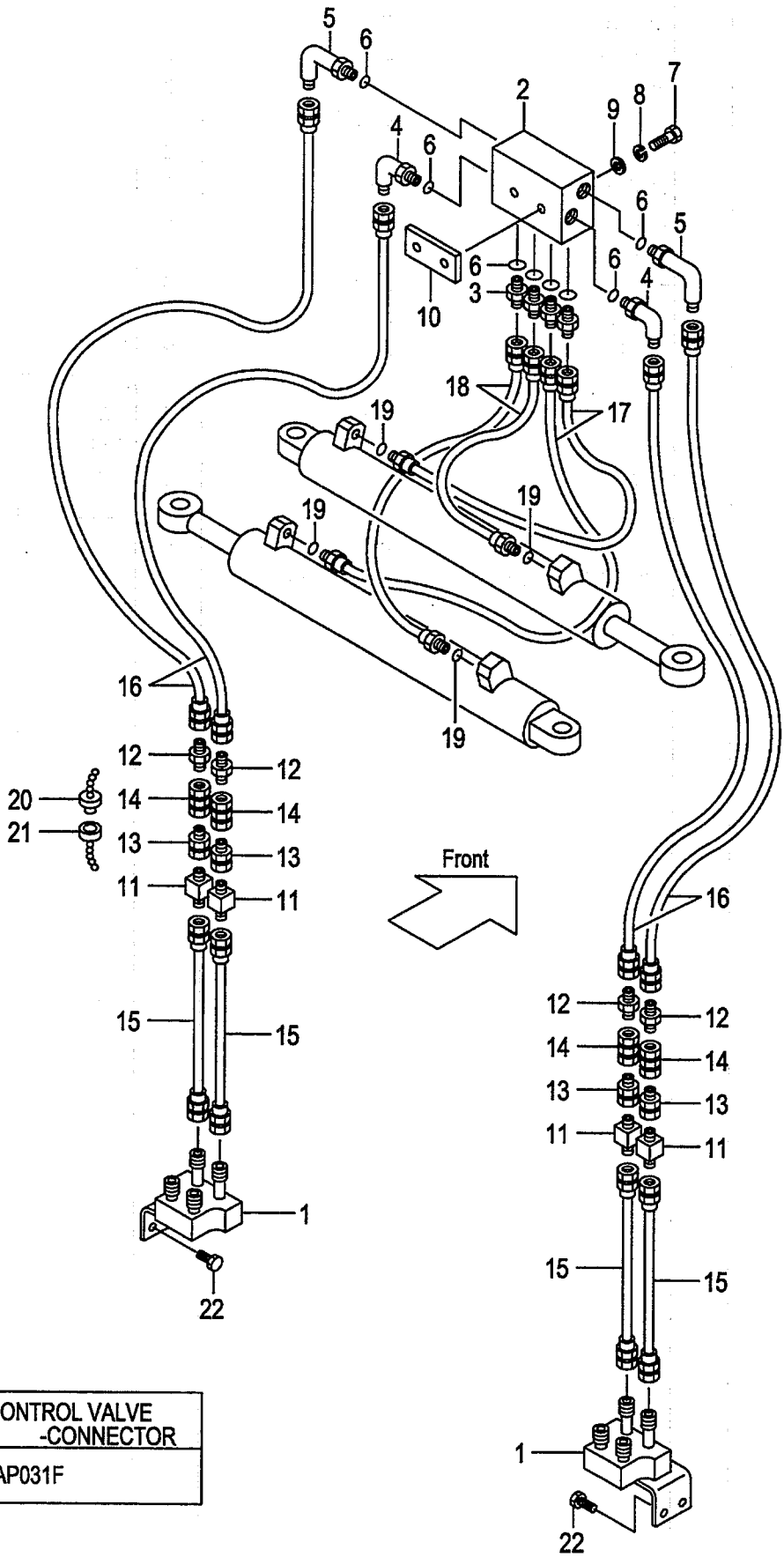

CONTROL VALVE -CONNECTOR
AP031F

A:LG3A4(J) D:LG3D4(J)
B:LG3B4(J) E:LG3E4(J)
C:LG3C4(J) F:LG3F4(J)

FIG.59
(A503LG40)

Item No	Part No.	Mark	Description		Req'd	Remarks : Serial No.
1	63110-14661		STUD	ｽﾀｯﾄﾞ	2	[4DK]
2	63130-16432		VALVE,CHECK	ﾊﾞﾙﾌﾞ	1	[4DK]
3	04134-00303		NIPPLE	ﾆｯﾌﾟﾙ	4	[4DK]
4	04150-00303		ELBOW	ｴﾙﾎﾞ	2	[4DK]
5	04150-10303		ELBOW	ｴﾙﾎﾞ	2	[4DK]
6	03320-00140		O-RING	Oﾘﾝｸﾞ	8	[4DK]
7	01100-08050		BOLT	ﾎﾞﾙﾄ	2	[4DK]
8	02010-00008		WASHER	ﾜｯｼｬ	2	[4DK]
9	02000-00008		WASHER	ﾜｯｼｬ	2	[4DK]
10	63146-22801		PLATE	ﾌﾟﾚｰﾄ	1	[4DK]
11	63110-18661		STUD	ｽﾀｯﾄﾞ	4	[4DK]
12	04137-00303		NIPPLE	ﾆｯﾌﾟﾙ	4	[4DK]
13	04138-00303		UNION	ﾕﾆｵﾝ	4	[4DK]
14	50226-29111		COUPLING,SELF-SEAL	ｶｯﾌﾟﾘﾝｸﾞ	4	[4DK]
15	63130-21035		HOSE	ﾎｰｽ	4	[4DK]
16	63130-21050		HOSE	ﾎｰｽ	4	[4DK]
17	63130-22070		HOSE	ﾎｰｽ	2	[4DK]
18	63130-22075		HOSE	ﾎｰｽ	2	A,D [4DK](RAIL WIDTH 1350)
-	63130-22080		HOSE	ﾎｰｽ	2	B,E [4DK](RAIL WIDTH 1450)
-	63130-22085		HOSE	ﾎｰｽ	2	C,F [4DK](RAIL WIDTH 1550)
19	03320-00140		O-RING	Oﾘﾝｸﾞ	4	[4DK]
20	63130-14061		PLUG	ﾌﾟﾗｸﾞ	4	[4DK]
21	63130-14071		CAP	ｷｬｯﾌﾟ	4	[4DK]
22	01184-10025		BOLT & WASHER	ﾎﾞﾙﾄ&ﾜｯｼｬ	4	[4DK]
23	27132-40181	+	BAND	ﾊﾞﾝﾄﾞ	4	[4DK]
24	62036-23501	+	BAR	ﾊﾞｰ	1	[4DK]
25	621B0-12591	+	PLATE	ﾌﾟﾚｰﾄ	2	[4DK]

FIG.60 HYDRAULIC LINE (CONNECTOR-CYLINDER)[ACC]

(A503LG50) ﾊｲﾄﾞﾛﾘｯｸﾗｲﾝ (ｺﾈｸﾀｰｼﾘﾝﾀﾞ)

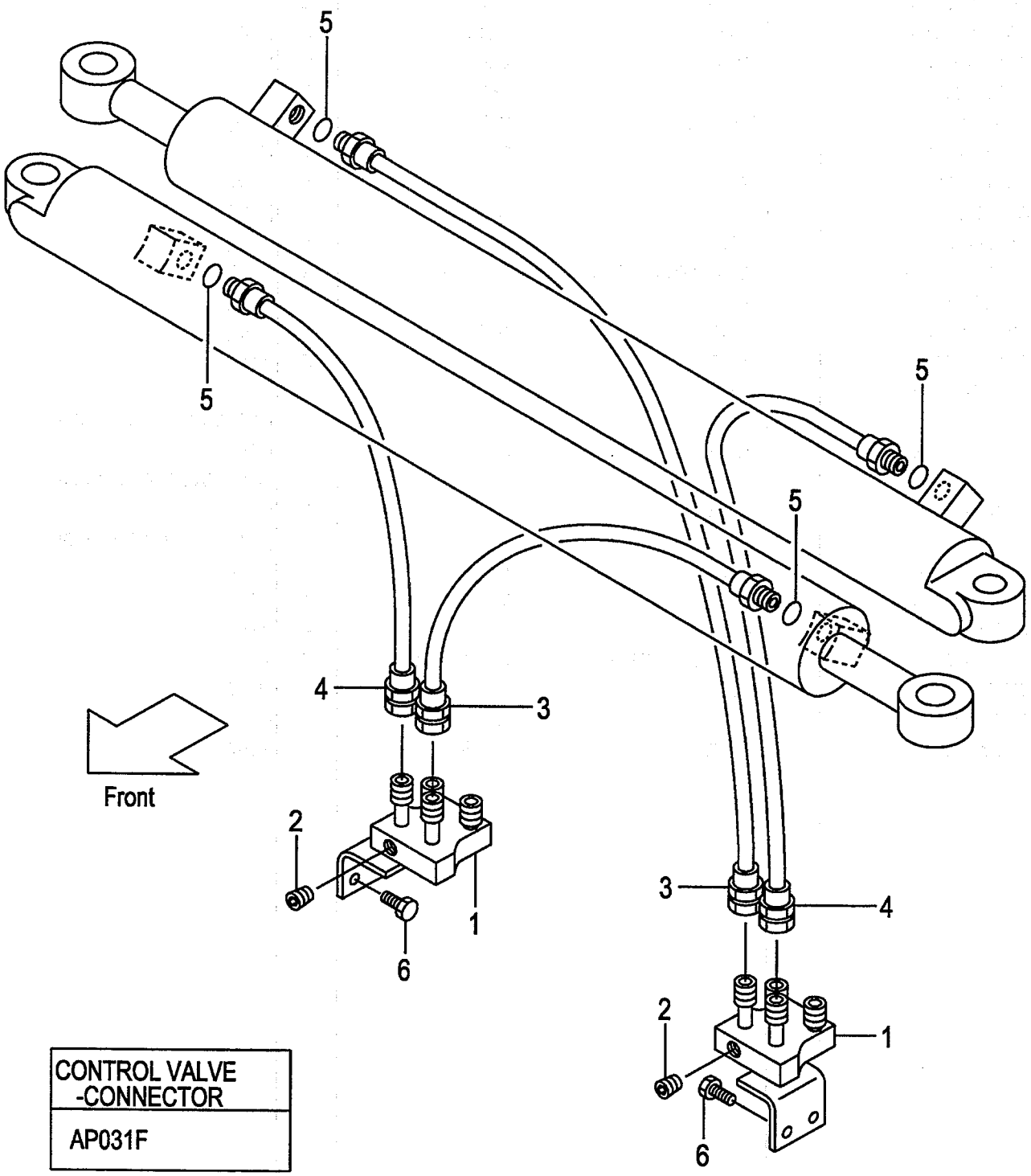

CONTROL VALVE -CONNECTOR
AP031F

A:LG3A4(J) D:LG3D4(J)
B:LG3B4(J) E:LG3E4(J)
C:LG3C4(J) F:LG3F4(J)

FIG.60
(A503LG50)

Item No	Part No.	Mark	Description		Req'd	Remarks : Serial No.
1	63110-14681		STUD	ｽﾀｯﾄﾞ	2	[ACC]
2	23870-52871		PLUG	ﾌﾟﾗｸﾞ	2	[ACC]
3	63130-22070		HOSE	ﾎｰｽ	2	[ACC]
4	63130-22075		HOSE	ﾎｰｽ	2	A,D
						[ACC](RAIL WIDTH 1350)
-	63130-22080		HOSE	ﾎｰｽ	2	B,E
						[ACC](RAIL WIDTH 1450)
-	63130-22085		HOSE	ﾎｰｽ	2	C,F
						[ACC](RAIL WIDTH 1550)
5	03320-00140		O-RING	Oﾘﾝｸﾞ	4	[ACC]
6	01184-10025		BOLT & WASHER	ﾎﾞﾙﾄ&ﾜｯｼｬ	4	[ACC]

FIG.61 HYDRAULIC LINE (CONNECTOR-CYLINDER)[ACC/4DK]

(A503LG60) ﾊｲﾄﾞﾛﾘｯｸﾗｲﾝ (ｺﾈｸﾀｰｼﾘﾝﾀﾞ)

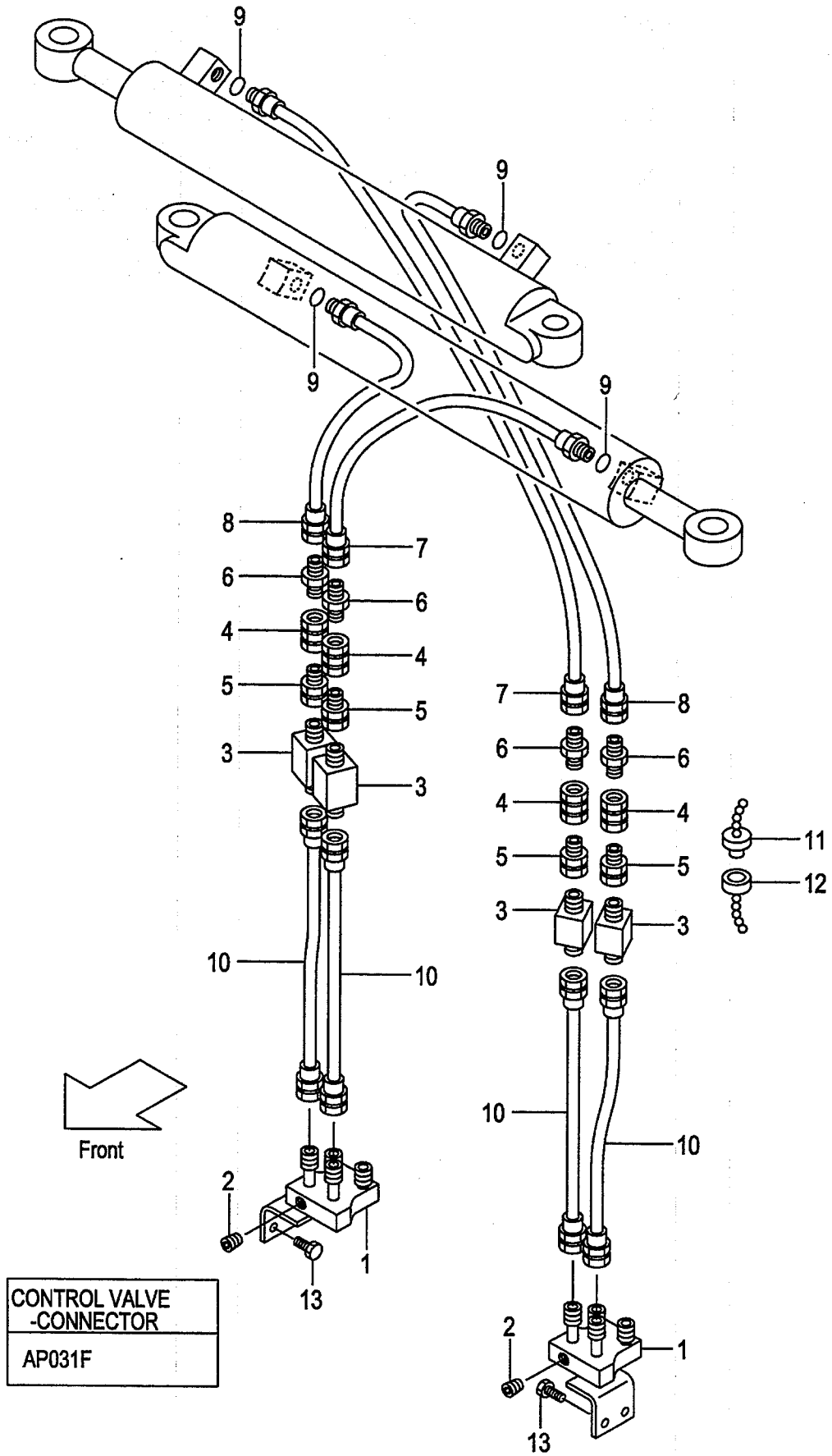

CONTROL VALVE -CONNECTOR
AP031F

A:LG3A4(J) D:LG3D4(J)
B:LG3B4(J) E:LG3E4(J)
C:LG3C4(J) F:LG3F4(J)

FIG.61
(A503LG60)

Item No	Part No.	Mark	Description		Req'd	Remarks : Serial No.
1	63110-14681		STUD	ｽﾀｯﾄﾞ	2	[ACC/4DK]
2	23870-52871		PLUG	ﾌﾟﾗｸﾞ	2	[ACC/4DK]
3	63110-18661		STUD	ｽﾀｯﾄﾞ	4	[ACC/4DK]
4	50226-29111		COUPLING	ｶｯﾌﾟﾘﾝｸﾞ	4	[ACC/4DK]
5	04138-00303		UNION	ﾕﾆｵﾝ	4	[ACC/4DK]
6	04135-00303		UNION	ﾕﾆｵﾝ	4	[ACC/4DK]
7	63130-22070		HOSE	ﾎｰｽ	2	[ACC/4DK]
8	63130-22075		HOSE	ﾎｰｽ	2	A,D [ACC/4DK](RAIL WIDTH 1350)
-	63130-22080		HOSE	ﾎｰｽ	2	B,E [ACC/4DK](RAIL WIDTH 1450)
-	63130-22085		HOSE	ﾎｰｽ	2	C,F [ACC/4DK](RAIL WIDTH 1550)
9	03320-00140		O-RING	Oﾘﾝｸﾞ	4	[ACC/4DK]
10	63130-21030		HOSE	ﾎｰｽ	4	[ACC/4DK]
11	63130-14061		PLUG	ﾌﾟﾗｸﾞ	4	[ACC/4DK]
12	63130-14071		CAP	ｷｬｯﾌﾟ	4	[ACC/4DK]
13	01184-10025		BOLT & WASHER	ﾎﾞﾙﾄ&ﾜｯｼｬ	4	[ACC/4DK]
14	27132-40181	+	BAND	ﾊﾞﾝﾄﾞ	4	[ACC/4DK]
15	62036-23501	+	BAR	ﾊﾞｰ	1	[ACC/4DK]
16	621B0-12591	+	PLATE	ﾌﾟﾚｰﾄ	2	[ACC/4DK]

FIG.62 HYDRAULIC LINE (CONNECTOR-CYLINDER)[SSV]

(A503LG70) ﾊｲﾄﾞﾛﾘｯｸﾗｲﾝ (ｺﾈｸﾀｰｼﾘﾝﾀﾞｰ)

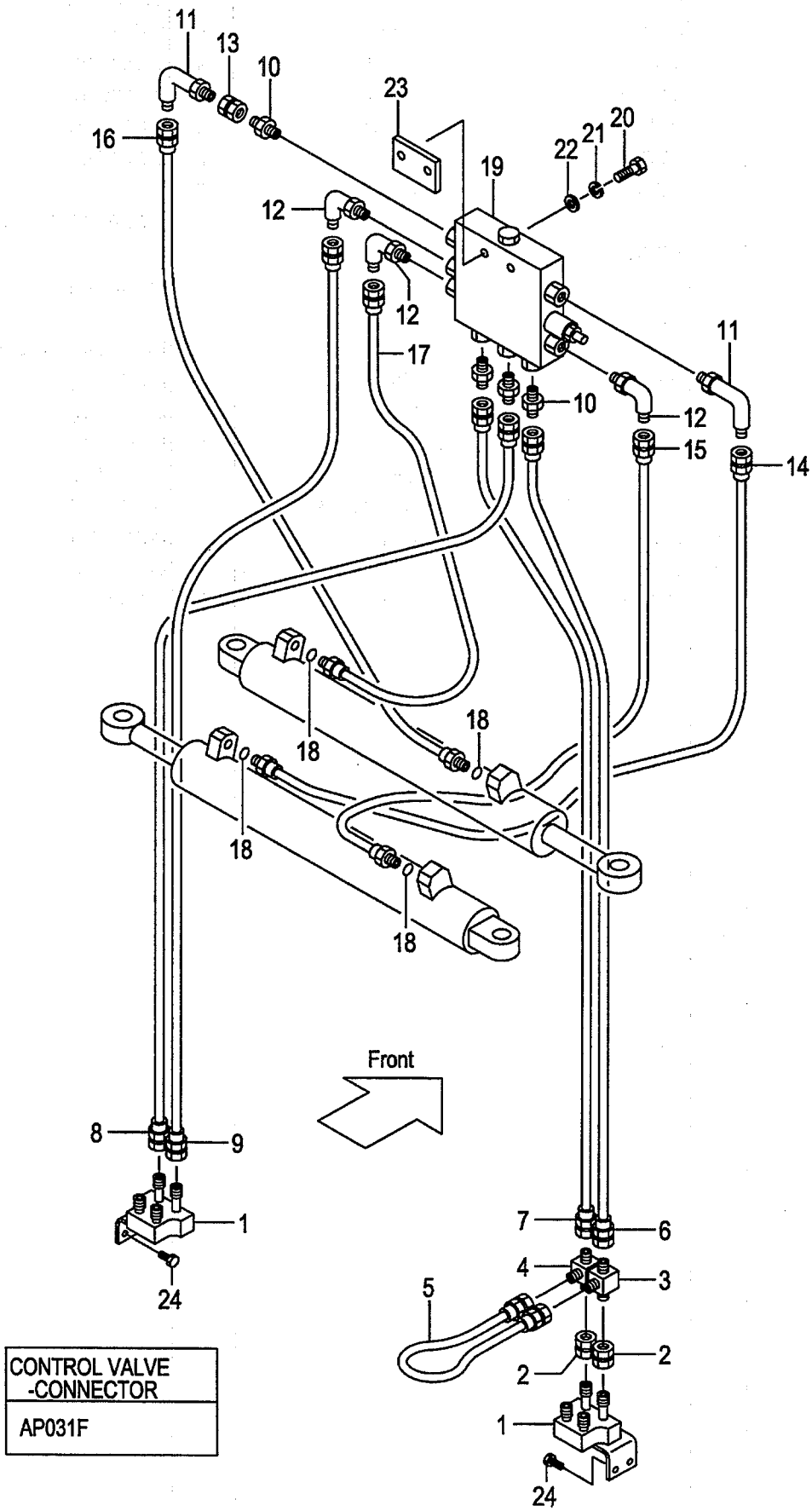

CONTROL VALVE -CONNECTOR
AP031F

A:LG3A4(J) D:LG3D4(J)
B:LG3B4(J) E:LG3E4(J)
C:LG3C4(J) F:LG3F4(J)

FIG.62
(A503LG70)

Item No	Part No.	Mark	Description		Req'd	Remarks : Serial No.
1	63110-14661		STUD	ｽﾀｯﾄﾞ	2	[SSV]
2	63130-12711		UNION	ﾕﾆｵﾝ	2	[SSV]
3	63110-13121		THREE-WAY	ｽﾘｰｳｴｲ	1	[SSV]
4	63110-18601		THREE-WAY	ｽﾘｰｳｴｲ	1	[SSV]
5	63130-31033		HOSE	ﾎｰｽ	1	[SSV]
6	63130-21070		HOSE	ﾎｰｽ	1	[SSV]
7	63130-21075		HOSE	ﾎｰｽ	1	[SSV]
8	63130-21080		HOSE	ﾎｰｽ	1	[SSV]
9	63130-21075		HOSE	ﾎｰｽ	1	[SSV]
10	04137-00303		NIPPLE	ﾆｯﾌﾟﾙ	4	[SSV]
11	53110-12121		ELBOW	ｴﾙﾎﾞ	2	[SSV]
12	53110-12131		ELBOW	ｴﾙﾎﾞ	3	[SSV]
13	04139-00303		UNION	ﾕﾆｵﾝ	1	[SSV]
14	63130-22075		HOSE	ﾎｰｽ	1	A,D [SSV]
-	63130-22075		HOSE	ﾎｰｽ	1	B,E [SSV]
-	63130-22075		HOSE	ﾎｰｽ	1	C,F [SSV]
15	63130-22080		HOSE	ﾎｰｽ	1	A,D [SSV]
-	63130-22085		HOSE	ﾎｰｽ	1	B,E [SSV]
-	63130-22090		HOSE	ﾎｰｽ	1	C,F [SSV]
16	63130-22075		HOSE	ﾎｰｽ	1	A,D [SSV]
-	63130-22075		HOSE	ﾎｰｽ	1	B,E [SSV]
-	63130-22075		HOSE	ﾎｰｽ	1	C,F [SSV]
17	63130-22080		HOSE	ﾎｰｽ	1	A,D [SSV]
-	63130-22085		HOSE	ﾎｰｽ	1	B,E [SSV]
-	63130-22090		HOSE	ﾎｰｽ	1	C,F [SSV]
18	03320-00140		O-RING	Oﾘﾝｸﾞ	4	[SSV]
19	63130-12651		VALVE,SIDE-SHIFT	ﾊﾞﾙﾌﾞ	1	[SSV]
20	01100-08045		BOLT	ﾎﾞﾙﾄ	2	[SSV]
21	02000-00008		WASHER	ﾜｯｼｬ	2	[SSV]
22	02010-00008		WASHER	ﾜｯｼｬ	2	[SSV]
23	62246-24201		PLATE	ﾌﾟﾚｰﾄ	1	[SSV]
24	01184-10025		BOLT & WASHER	ﾎﾞﾙﾄ&ﾜｯｼｬ	4	[SSV]

FIG.63 HYDRAULIC LINE (CONNECTOR-CYLINDER)[SSV/4DK]

(A503LG80) ﾊｲﾄﾞﾛﾘｯｸﾗｲﾝ (ｺﾈｸﾀｰｼﾘﾝﾀﾞ)

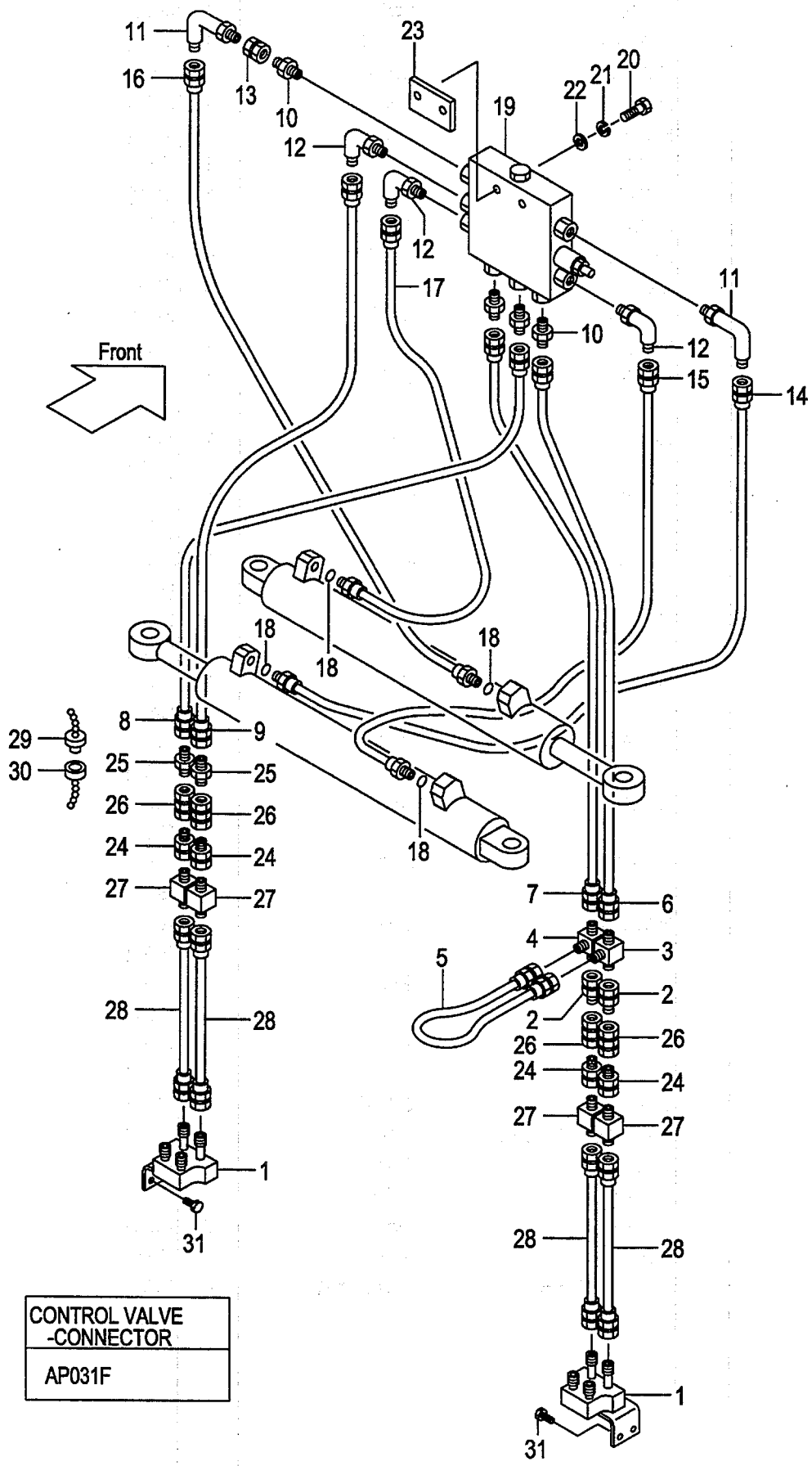

CONTROL VALVE -CONNECTOR
AP031F

A:LG3A4(J) D:LG3D4(J)
B:LG3B4(J) E:LG3E4(J)
C:LG3C4(J) F:LG3F4(J)

FIG.63
(A503LG80)

Item No	Part No.	Mark	Description		Req'd	Remarks : Serial No.
1	63110-14661		STUD	ｽﾀｯﾄﾞ	2	[SSV/4DK]
2	04138-00303		UNION	ﾕﾆｵﾝ	2	[SSV/4DK]
3	63110-13121		THREE-WAY	ｽﾘｰｳｴｲ	1	[SSV/4DK]
4	63110-18601		THREE-WAY	ｽﾘｰｳｴｲ	1	[SSV/4DK]
5	63130-31033		HOSE	ﾎｰｽ	1	[SSV/4DK]
6	63130-21050		HOSE	ﾎｰｽ	1	[SSV/4DK]
7	63130-21055		HOSE	ﾎｰｽ	1	[SSV/4DK]
8	63130-21050		HOSE	ﾎｰｽ	1	[SSV/4DK]
9	63130-21065		HOSE	ﾎｰｽ	1	[SSV/4DK]
10	04137-00303		NIPPLE	ﾆｯﾌﾟﾙ	4	[SSV/4DK]
11	53110-12121		ELBOW	ｴﾙﾎﾞ	2	[SSV/4DK]
12	53110-12131		ELBOW	ｴﾙﾎﾞ	3	[SSV/4DK]
13	04139-00303		UNION	ﾕﾆｵﾝ	1	[SSV/4DK]
14	63130-22075		HOSE	ﾎｰｽ	1	A,D [SSV/4DK]
-	63130-22075		HOSE	ﾎｰｽ	1	B,E [SSV/4DK]
-	63130-22075		HOSE	ﾎｰｽ	1	C,F [SSV/4DK]
15	63130-22080		HOSE	ﾎｰｽ	1	A,D [SSV/4DK]
-	63130-22085		HOSE	ﾎｰｽ	1	B,E [SSV/4DK]
-	63130-22090		HOSE	ﾎｰｽ	1	C,F [SSV/4DK]
16	63130-22075		HOSE	ﾎｰｽ	1	A,D [SSV/4DK]
-	63130-22075		HOSE	ﾎｰｽ	1	B,E [SSV/4DK]
-	63130-22075		HOSE	ﾎｰｽ	1	C,F [SSV/4DK]
17	63130-22080		HOSE	ﾎｰｽ	1	A,D [SSV/4DK]
-	63130-22085		HOSE	ﾎｰｽ	1	B,E [SSV/4DK]
-	63130-22090		HOSE	ﾎｰｽ	1	C,F [SSV/4DK]
18	03320-00140		O-RING	Oﾘﾝｸﾞ	4	[SSV/4DK]
19	63130-12651		VALVE,SIDE-SHIFT	ﾊﾞﾙﾌﾞ	1	[SSV/4DK]
20	01100-08045		BOLT	ﾎﾞﾙﾄ	2	[SSV/4DK]
21	02000-00008		WASHER	ﾜｯｼｬ	2	[SSV/4DK]
22	02010-00008		WASHER	ﾜｯｼｬ	2	[SSV/4DK]
23	62246-24201		PLATE	ﾌﾟﾚｰﾄ	1	[SSV/4DK]
24	04138-00303		UNION	ﾕﾆｵﾝ	4	[SSV/4DK]
25	04137-00303		NIPPLE	ﾆｯﾌﾟﾙ	2	[SSV/4DK]
26	50226-29111		COUPLING	ｶｯﾌﾟﾘﾝｸﾞ	4	[SSV/4DK]
27	63110-18661		STUD	ｽﾀｯﾄﾞ	4	[SSV/4DK]
28	63130-21035		HOSE	ﾎｰｽ	4	[SSV/4DK]
29	63130-14061		PLUG	ﾌﾟﾗｸﾞ	4	[SSV/4DK]
30	63130-14071		CAP	ｷｬｯﾌﾟ	4	[SSV/4DK]

FIG.63 HYDRAULIC LINE (CONNECTOR-CYLINDER)[SSV/4DK]

(A503LG80) ﾊｲﾄﾞﾛﾘｯｸﾗｲﾝ (ｺﾈｸﾀｰｼﾘﾝﾀﾞ)

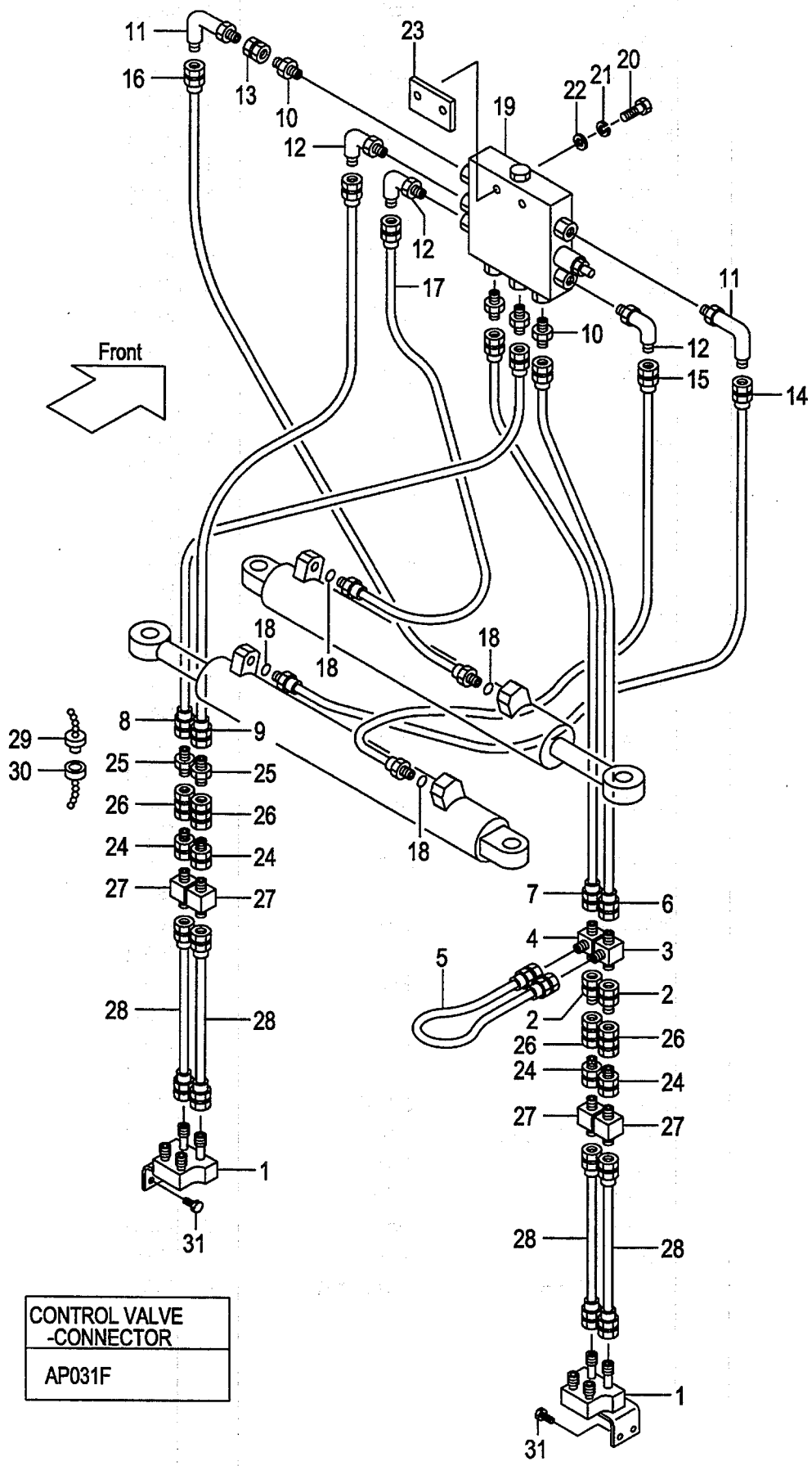

CONTROL VALVE -CONNECTOR
AP031F

A:LG3A4(J) D:LG3D4(J)
B:LG3B4(J) E:LG3E4(J)
C:LG3C4(J) F:LG3F4(J)

FIG.63
(A503LG80)

Item No	Part No.	Mark	Description		Req'd	Remarks : Serial No.
31	01184-10025		BOLT & WASHER	ﾎﾞﾙﾄ&ﾜｯｼｬ	4	[SSV/4DK]
32	27132-40181	+	BAND	ﾊﾞﾝﾄﾞ	8	[SSV/4DK]
33	62036-82251	+	PLATE	ﾌﾟﾚｰﾄ	2	[SSV/4DK]
34	62036-23501	+	BAR	ﾊﾞｰ	1	[SSV/4DK]
35	621B0-12591	+	PLATE	ﾌﾟﾚｰﾄ	2	[SSV/4DK]

FIG.64 HYDRAULIC LINE (CONNECTOR-CYLINDER)[VFM,VFHM]

(A503LG90) ﾊｲﾄﾞﾛﾘｯｸﾗｲﾝ (ｺﾈｸﾀｰｼﾘﾝﾀﾞｰ)

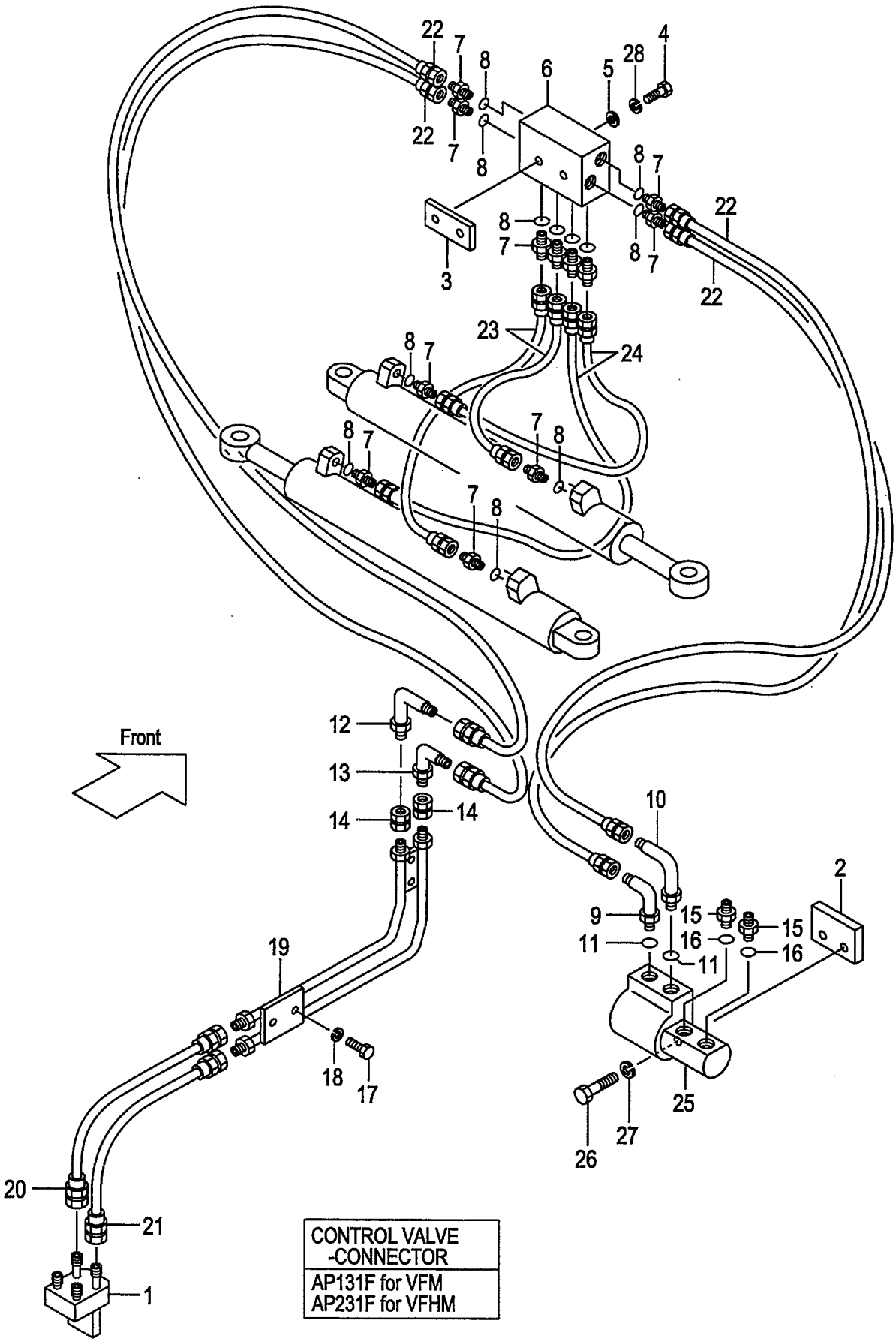

A:LG3A4(J) D:LG3D4(J)
B:LG3B4(J) E:LG3E4(J)
C:LG3C4(J) F:LG3F4(J)

FIG.64
(A503LG90)

Item No	Part No.	Mark	Description		Req'd	Remarks : Serial No.
1	62170-12571		STUD	ｽﾀｯﾄﾞ	1	
2	62150-12791		PLATE,A	ﾌﾟﾚｰﾄ	1	
3	62036-24502		PLATE	ﾌﾟﾚｰﾄ	1	
4	01100-08050		BOLT	ﾎﾞﾙﾄ	2	
5	02000-00008		WASHER	ﾜｯｼｬ	2	
6	63130-16432		VALVE,CHECK	ﾊﾞﾙﾌﾞ	1	
7	04134-00303		NIPPLE	ﾆｯﾌﾟﾙ	12	
8	03320-00140		O-RING	Oﾘﾝｸﾞ	12	
9	04150-00303		ELBOW	ｴﾙﾎﾞ	1	
10	04150-10303		ELBOW	ｴﾙﾎﾞ	1	
11	03320-00140		O-RING	Oﾘﾝｸﾞ	2	
12	53110-12121		ELBOW	ｴﾙﾎﾞ	1	
13	53110-12131		ELBOW	ｴﾙﾎﾞ	1	
14	04139-00303		UNION	ﾕﾆｵﾝ	2	
15	63110-12281		NIPPLE	ﾆｯﾌﾟﾙ	2	
16	03320-00140		O-RING	Oﾘﾝｸﾞ	2	
17	01100-08012		BOLT	ﾎﾞﾙﾄ	4	
18	02010-00008		WASHER	ﾜｯｼｬ	4	
19	62150-12701		PIPE	ﾊﾟｲﾌﾟ	1	
20	63130-21045		HOSE	ﾎｰｽ	1	[VFM]
-	63130-21040		HOSE	ﾎｰｽ	1	[VFHM]
21	63130-21053		HOSE	ﾎｰｽ	1	[VFM]
-	63130-21047		HOSE	ﾎｰｽ	1	[VFHM]
22	63130-21055		HOSE	ﾎｰｽ	4	
23	63130-21070		HOSE	ﾎｰｽ	2	
24	63130-21075		HOSE	ﾎｰｽ	2	A,D (RAIL WIDTH 1350)
-	63130-21080		HOSE	ﾎｰｽ	2	B,E (RAIL WIDTH 1450)
-	63130-21085		HOSE	ﾎｰｽ	2	C,F (RAIL WIDTH 1550)
25	63130-15083		BLOCK,JUNCTION,RH	ﾌﾞﾛｯｸ	1	
26	01100-12035		BOLT	ﾎﾞﾙﾄ	2	
27	02010-00012		WASHER	ﾜｯｼｬ	2	
28	02010-00008		WASHER	ﾜｯｼｬ	2	
29	62150-12781	+	BRACKET	ﾌﾞﾗｹｯﾄ	1	
30	62150-12771	+	BRACKET	ﾌﾞﾗｹｯﾄ	1	
31	61150-12511	+	PLATE	ﾌﾟﾚｰﾄ	1	

HYDRAULIC LINE
FIG.65 (CONNECTOR-CYLINDER)[(VFM,VFHM)/4DK]
(A503LGA0) ﾊｲﾄﾞﾛﾘｯｸﾗｲﾝ (ｺﾈｸﾀｰｼﾘﾝﾀﾞ)

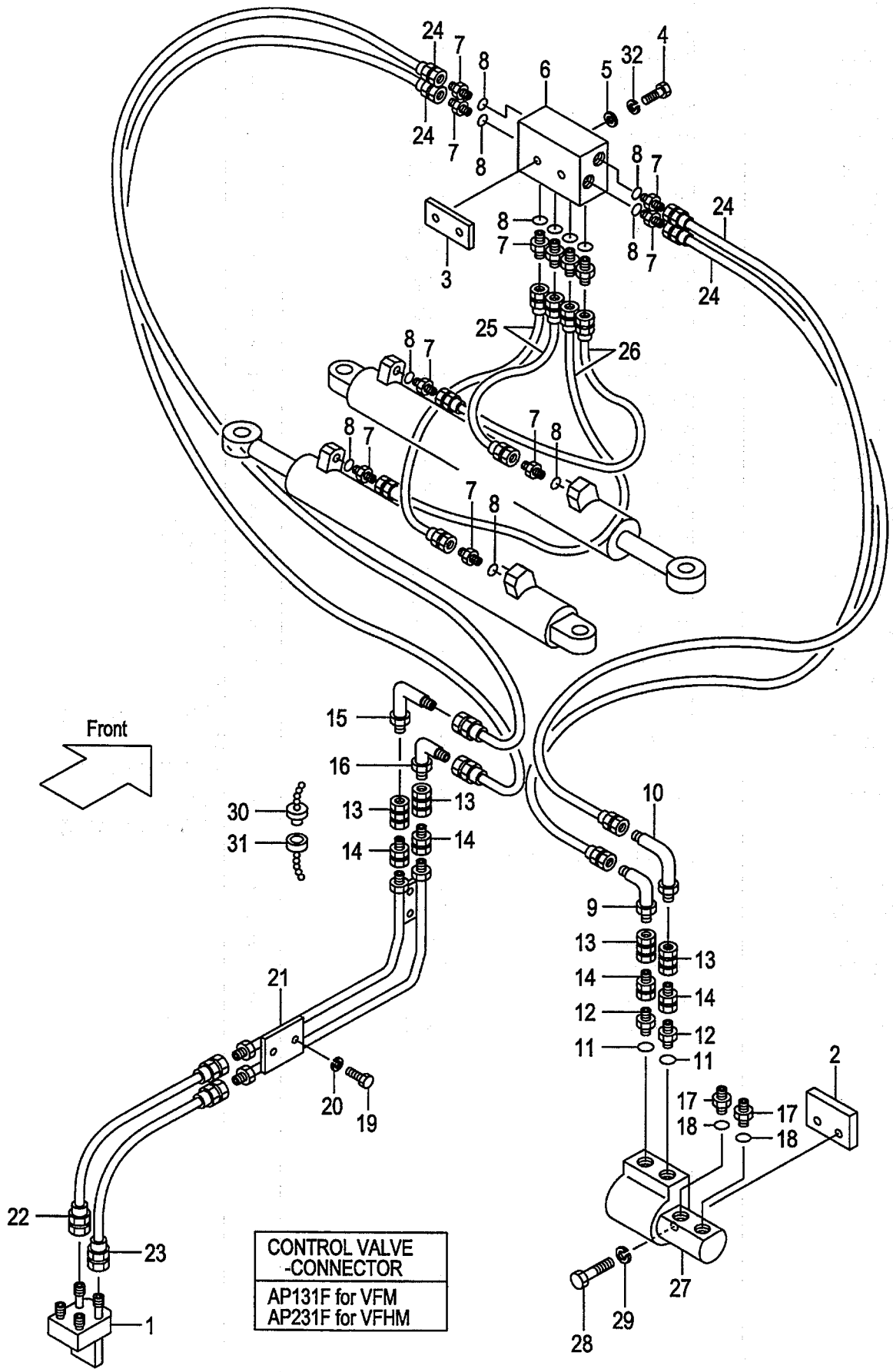

A:LG3A4(J) D:LG3D4(J)
B:LG3B4(J) E:LG3E4(J)
C:LG3C4(J) F:LG3F4(J)

FIG.65
(A503LGA0)

Item No	Part No.	Mark	Description		Req'd	Remarks : Serial No.
1	62170-12571		STUD	ｽﾀｯﾄﾞ	1	[4DK]
2	62150-12791		PLATE,A	ﾌﾟﾚｰﾄ	1	[4DK]
3	62036-24502		PLATE	ﾌﾟﾚｰﾄ	1	[4DK]
4	01100-08050		BOLT	ﾎﾞﾙﾄ	2	[4DK]
5	02000-00008		WASHER	ﾜｯｼｬ	2	[4DK]
6	63130-16432		VALVE,CHECK	ﾊﾞﾙﾌﾞ	1	[4DK]
7	04134-00303		NIPPLE	ﾆｯﾌﾟﾙ	12	[4DK]
8	03320-00140		O-RING	Oﾘﾝｸﾞ	12	[4DK]
9	53110-12131		ELBOW	ｴﾙﾎﾞ	1	[4DK]
10	53110-12121		ELBOW	ｴﾙﾎﾞ	1	[4DK]
11	03320-00140		O-RING	Oﾘﾝｸﾞ	2	[4DK]
12	04134-00303		NIPPLE	ﾆｯﾌﾟﾙ	2	[4DK]
13	50226-29111		COUPLING	ｶｯﾌﾟﾘﾝｸﾞ	4	[4DK]
14	04138-00303		UNION	ﾕﾆｵﾝ	4	[4DK]
15	53110-12121		ELBOW	ｴﾙﾎﾞ	1	[4DK]
16	53110-12131		ELBOW	ｴﾙﾎﾞ	1	[4DK]
17	63110-12281		NIPPLE	ﾆｯﾌﾟﾙ	2	[4DK]
18	03320-00140		O-RING	Oﾘﾝｸﾞ	2	[4DK]
19	01100-08012		BOLT	ﾎﾞﾙﾄ	4	[4DK]
20	02010-00008		WASHER	ﾜｯｼｬ	4	[4DK]
21	62150-12701		PIPE	ﾊﾟｲﾌﾟ	1	[4DK]
22	63130-21053		HOSE	ﾎｰｽ	1	[VFM/4DK]
-	63130-21047		HOSE	ﾎｰｽ	1	[VFHM/4DK]
23	63130-21045		HOSE	ﾎｰｽ	1	[VFM/4DK]
-	63130-21040		HOSE	ﾎｰｽ	1	[VFHM/4DK]
24	63130-21055		HOSE	ﾎｰｽ	4	[4DK]
25	63130-21070		HOSE	ﾎｰｽ	2	[4DK]
26	63130-21075		HOSE	ﾎｰｽ	2	A,D [4DK](RAIL WIDTH 1350)
-	63130-21080		HOSE	ﾎｰｽ	2	B,E [4DK](RAIL WIDTH 1450)
-	63130-21085		HOSE	ﾎｰｽ	2	C,F [4DK](RAIL WIDTH 1550)
27	63130-15083		BLOCK,JUNCTION,RH	ﾌﾞﾛｯｸ	1	[4DK]
28	01100-12035		BOLT	ﾎﾞﾙﾄ	2	[4DK]
29	02010-00012		WASHER	ﾜｯｼｬ	2	[4DK]
30	63130-14061		PLUG	ﾌﾟﾗｸﾞ	4	[4DK]
31	63130-14071		CAP	ｷｬｯﾌﾟ	4	[4DK]
32	02010-00008		WASHER	ﾜｯｼｬ	2	[4DK]
33	27132-40181	+	BAND	ﾊﾞﾝﾄﾞ	8	[4DK]
34	62036-23501	+	BAR	ﾊﾞｰ	1	[4DK]
35	62150-12781	+	BRACKET	ﾌﾞﾗｹｯﾄ	1	[4DK]
36	62150-12771	+	BRACKET	ﾌﾞﾗｹｯﾄ	1	[4DK]
37	61150-12511	+	PLATE	ﾌﾟﾚｰﾄ	1	[4DK]

FIG.66 HYDRAULIC LINE (CONNECTOR-CYLINDER)[(VFM,VFHM)/SSV]

(A503LGB0) ﾊｲﾄﾞﾛﾘｯｸﾗｲﾝ (ｺﾈｸﾀｰｼﾘﾝﾀﾞ)

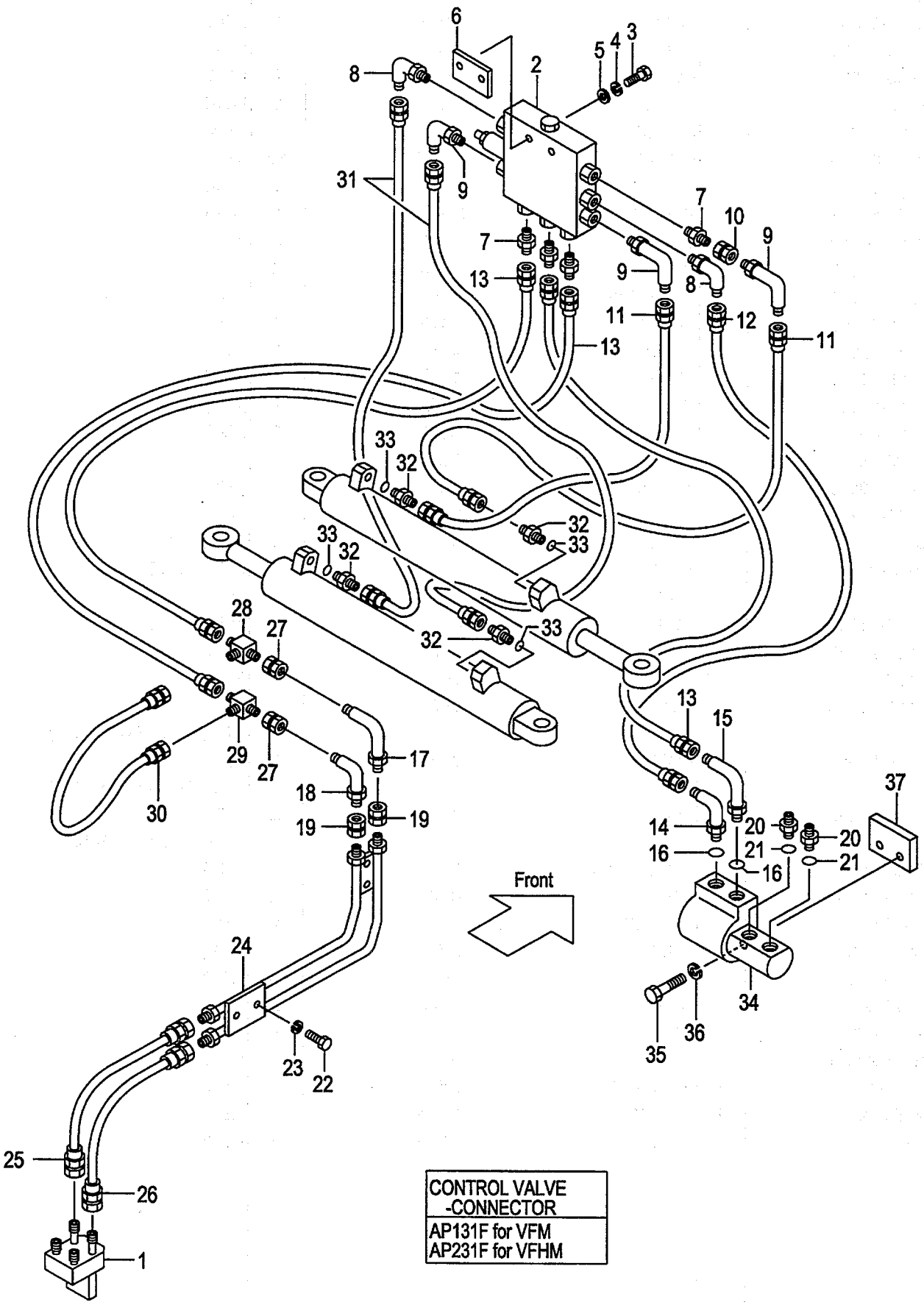

CONTROL VALVE -CONNECTOR
AP131F for VFM AP231F for VFHM

A:LG3A4(J) D:LG3D4(J)
B:LG3B4(J) E:LG3E4(J)
C:LG3C4(J) F:LG3F4(J)

FIG.66
(A503LGB0)

Item No	Part No.	Mark	Description		Req'd	Remarks : Serial No.
1	62170-12571		STUD	ｽﾀｯﾄﾞ	1	[SSV]
2	63130-12651		VALVE,SIDE-SHIFT	ﾊﾞﾙﾌﾞ	1	[SSV]
3	01100-08045		BOLT	ﾎﾞﾙﾄ	2	[SSV]
4	02000-00008		WASHER	ﾜｯｼｬ	2	[SSV]
5	02010-00008		WASHER	ﾜｯｼｬ	2	[SSV]
6	62246-24201		PLATE	ﾌﾟﾚｰﾄ	1	[SSV]
7	04137-00303		NIPPLE	ﾆｯﾌﾟﾙ	4	[SSV]
8	53110-12121		ELBOW	ｴﾙﾎﾞ	2	[SSV]
9	53110-12131		ELBOW	ｴﾙﾎﾞ	3	[SSV]
10	04139-00303		UNION	ﾕﾆｵﾝ	1	[SSV]
11	63130-21075		HOSE	ﾎｰｽ	2	A,D [SSV](RAIL WIDTH 1350)
-	63130-21080		HOSE	ﾎｰｽ	2	B,E [SSV](RAIL WIDTH 1450)
-	63130-21085		HOSE	ﾎｰｽ	2	C,F [SSV](RAIL WIDTH 1550)
12	63130-21050		HOSE	ﾎｰｽ	1	[SSV]
13	63130-21055		HOSE	ﾎｰｽ	3	[SSV]
14	04150-00303		ELBOW	ｴﾙﾎﾞ	1	[SSV]
15	04150-10303		ELBOW	ｴﾙﾎﾞ	1	[SSV]
16	03320-00140		O-RING	Oﾘﾝｸﾞ	2	[SSV]
17	53110-12121		ELBOW	ｴﾙﾎﾞ	1	[SSV]
18	53110-12131		ELBOW	ｴﾙﾎﾞ	1	[SSV]
19	04139-00303		UNION	ﾕﾆｵﾝ	2	[SSV]
20	63110-12281		NIPPLE	ﾆｯﾌﾟﾙ	2	[SSV]
21	03320-00140		O-RING	Oﾘﾝｸﾞ	2	[SSV]
22	01100-08012		BOLT	ﾎﾞﾙﾄ	4	[SSV]
23	02010-00008		WASHER	ﾜｯｼｬ	4	[SSV]
24	62150-12701		PIPE	ﾊﾟｲﾌﾟ	1	[SSV]
25	63130-21045		HOSE	ﾎｰｽ	1	[SSV/VFM]
-	63130-21040		HOSE	ﾎｰｽ	1	[SSV/VFHM]
26	63130-21053		HOSE	ﾎｰｽ	1	[SSV/VFM]
-	63130-21047		HOSE	ﾎｰｽ	1	[SSV/VFHM]
27	63130-12711		UNION	ﾕﾆｵﾝ	2	[SSV]
28	63110-13121		THREE-WAY	ｽﾘｰｳｴｲ	1	[SSV]
29	63110-18601		THREE-WAY	ｽﾘｰｳｴｲ	1	[SSV]
30	63130-31033		HOSE	ﾎｰｽ	1	[SSV]
31	63130-21070		HOSE	ﾎｰｽ	2	[SSV]
32	04134-00303		NIPPLE	ﾆｯﾌﾟﾙ	4	[SSV]
33	03320-00140		O-RING	Oﾘﾝｸﾞ	4	[SSV]
34	63130-15083		BLOCK,JUNCTION,RH	ﾌﾞﾛｯｸ	1	[SSV]
35	01100-12035		BOLT	ﾎﾞﾙﾄ	2	[SSV]
36	02010-00012		WASHER	ﾜｯｼｬ	2	[SSV]
37	62150-12791		PLATE	ﾌﾟﾚｰﾄ	1	[SSV]
38	62150-12781	+	BRACKET	ﾌﾞﾗｹｯﾄ	1	[SSV]
39	62150-12771	+	BRACKET	ﾌﾞﾗｹｯﾄ	1	[SSV]
40	61150-12511	+	PLATE	ﾌﾟﾚｰﾄ	1	[SSV]

HYDRAULIC LINE
FIG.67 (CONNECTOR-CYLINDER)[SSV/4DK/(VFM,VFHM)]
(A503LGC0) ﾊｲﾄﾞﾛﾘｯｸﾗｲﾝ (ｺﾈｸﾀｰｼﾘﾝﾀﾞ)

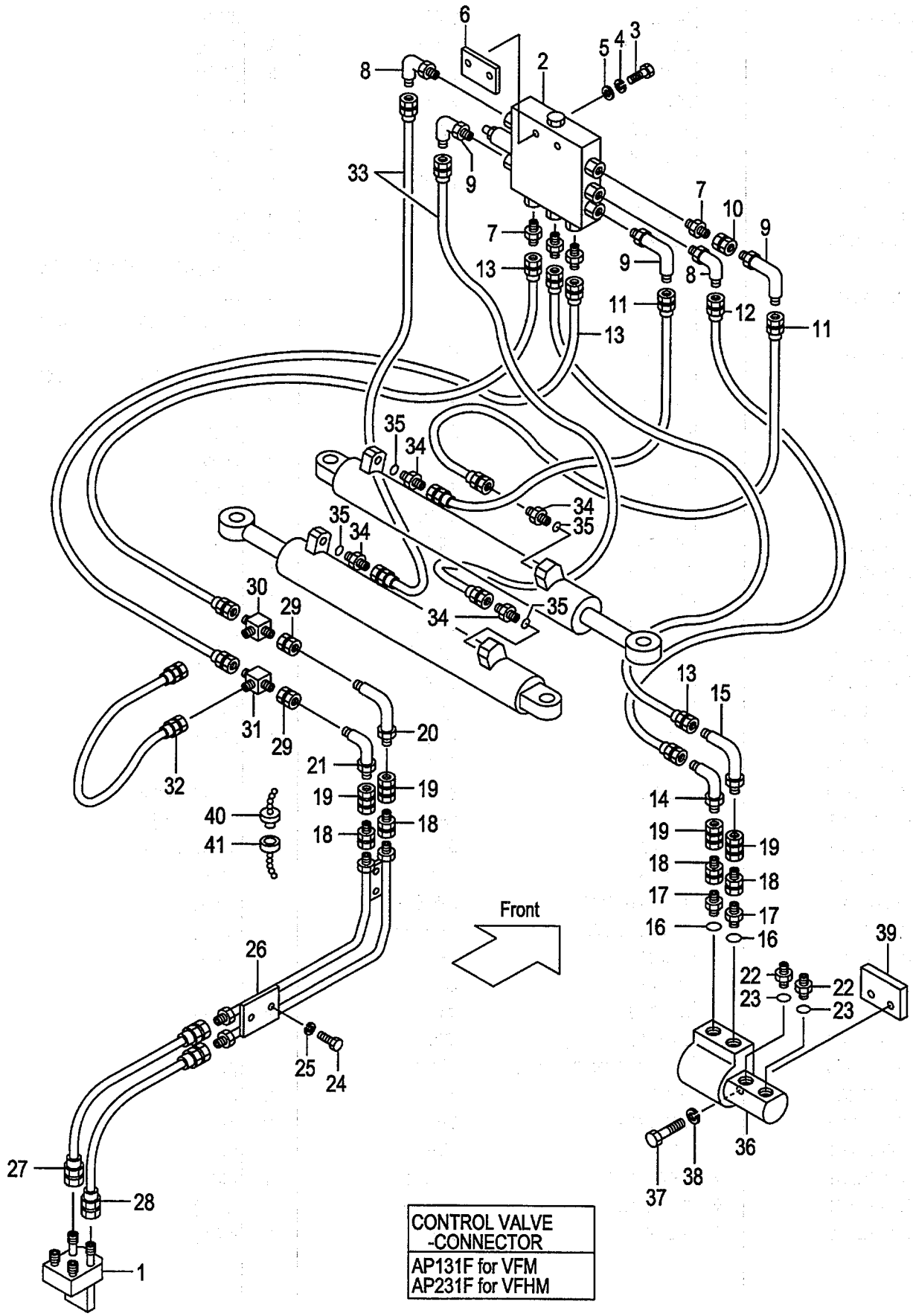

A:LG3A4(J) D:LG3D4(J)
B:LG3B4(J) E:LG3E4(J)
C:LG3C4(J) F:LG3F4(J)

FIG.67
(A503LGC0)

Item No	Part No.	Mark	Description		Req'd	Remarks : Serial No.
1	62170-12571		STUD	ｽﾀｯﾄﾞ	1	[SSV/4DK]
2	63130-12651		VALVE,SIDE-SHIFT	ﾊﾞﾙﾌﾞ	1	[SSV/4DK]
3	01100-08045		BOLT	ﾎﾞﾙﾄ	2	[SSV/4DK]
4	02000-00008		WASHER	ﾜｯｼｬ	2	[SSV/4DK]
5	02010-00008		WASHER	ﾜｯｼｬ	2	[SSV/4DK]
6	62246-24201		PLATE	ﾌﾟﾚｰﾄ	1	[SSV/4DK]
7	04137-00303		NIPPLE	ﾆｯﾌﾟﾙ	4	[SSV/4DK]
8	53110-12121		ELBOW	ｴﾙﾎﾞ	2	[SSV/4DK]
9	53110-12131		ELBOW	ｴﾙﾎﾞ	3	[SSV/4DK]
10	04139-00303		UNION	ﾕﾆｵﾝ	1	[SSV/4DK]
11	63130-21075		HOSE	ﾎｰｽ	2	A,D [SSV/4DK](RAIL WIDTH 1350)
-	63130-21080		HOSE	ﾎｰｽ	2	B,E [SSV/4DK](RAIL WIDTH 1450)
-	63130-21085		HOSE	ﾎｰｽ	2	C,F [SSV/4DK](RAIL WIDTH 1550)
12	63130-21050		HOSE	ﾎｰｽ	1	[SSV/4DK]
13	63130-21055		HOSE	ﾎｰｽ	3	[SSV/4DK]
14	53110-12131		ELBOW	ｴﾙﾎﾞ	1	[SSV/4DK]
15	53110-12121		ELBOW	ｴﾙﾎﾞ	1	[SSV/4DK]
16	03320-00140		O-RING	Oﾘﾝｸﾞ	2	[SSV/4DK]
17	04134-00303		NIPPLE	ﾆｯﾌﾟﾙ	2	[SSV/4DK]
18	04138-00303		UNION	ﾕﾆｵﾝ	4	[SSV/4DK]
19	50226-29111		COUPLING	ｶｯﾌﾟﾘﾝｸﾞ	4	[SSV/4DK]
20	53110-12121		ELBOW	ｴﾙﾎﾞ	1	[SSV/4DK]
21	53110-12131		ELBOW	ｴﾙﾎﾞ	1	[SSV/4DK]
22	63110-12281		NIPPLE	ﾆｯﾌﾟﾙ	2	[SSV/4DK]
23	03320-00140		O-RING	Oﾘﾝｸﾞ	2	[SSV/4DK]
24	01100-08012		BOLT	ﾎﾞﾙﾄ	4	[SSV/4DK]
25	02010-00008		WASHER	ﾜｯｼｬ	4	[SSV/4DK]
26	62150-12701		PIPE	ﾊﾟｲﾌﾟ	1	[SSV/4DK]
27	63130-21045		HOSE	ﾎｰｽ	1	[SSV/4DK/VFM]
-	63130-21040		HOSE	ﾎｰｽ	1	[SSV/4DK/VFHM]
28	63130-21053		HOSE	ﾎｰｽ	1	[SSV/4DK/VFM]
-	63130-21047		HOSE	ﾎｰｽ	1	[SSV/4DK/VFHM]
29	63130-12711		ADAPTER	ｱﾀﾞﾌﾟﾀ	2	[SSV/4DK]
30	63110-13121		THREE-WAY	ｽﾘｰｳｴｲ	1	[SSV/4DK]
31	63110-18601		THREE-WAY	ｽﾘｰｳｴｲ	1	[SSV/4DK]
32	63130-31033		HOSE	ﾎｰｽ	1	[SSV/4DK]
33	63130-21070		HOSE	ﾎｰｽ	2	[SSV/4DK]
34	04134-00303		NIPPLE	ﾆｯﾌﾟﾙ	4	[SSV/4DK]
35	03320-00140		O-RING	Oﾘﾝｸﾞ	4	[SSV/4DK]
36	63130-15083		BLOCK,JUNCTION,RH	ﾌﾞﾛｯｸ	1	[SSV/4DK]
37	01100-12035		BOLT	ﾎﾞﾙﾄ	2	[SSV/4DK]
38	02010-00012		WASHER	ﾜｯｼｬ	2	[SSV/4DK]
39	62150-12791		PLATE	ﾌﾟﾚｰﾄ	1	[SSV/4DK]
40	63130-14061		PLUG	ﾌﾟﾗｸﾞ	4	[SSV/4DK]
41	63130-14071		CAP	ｷｬｯﾌﾟ	4	[SSV/4DK]
42	27132-40181	+	BAND	ﾊﾞﾝﾄﾞ	8	[SSV/4DK]
43	62150-12781	+	BRACKET	ﾌﾞﾗｹｯﾄ	1	[SSV/4DK]

HYDRAULIC LINE
FIG.67 (CONNECTOR-CYLINDER)[SSV/4DK/(VFM,VFHM)]
(A503LGC0) ﾊｲﾄﾞﾛﾘｯｸﾗｲﾝ (ｺﾈｸﾀｰｼﾘﾝﾀﾞ)

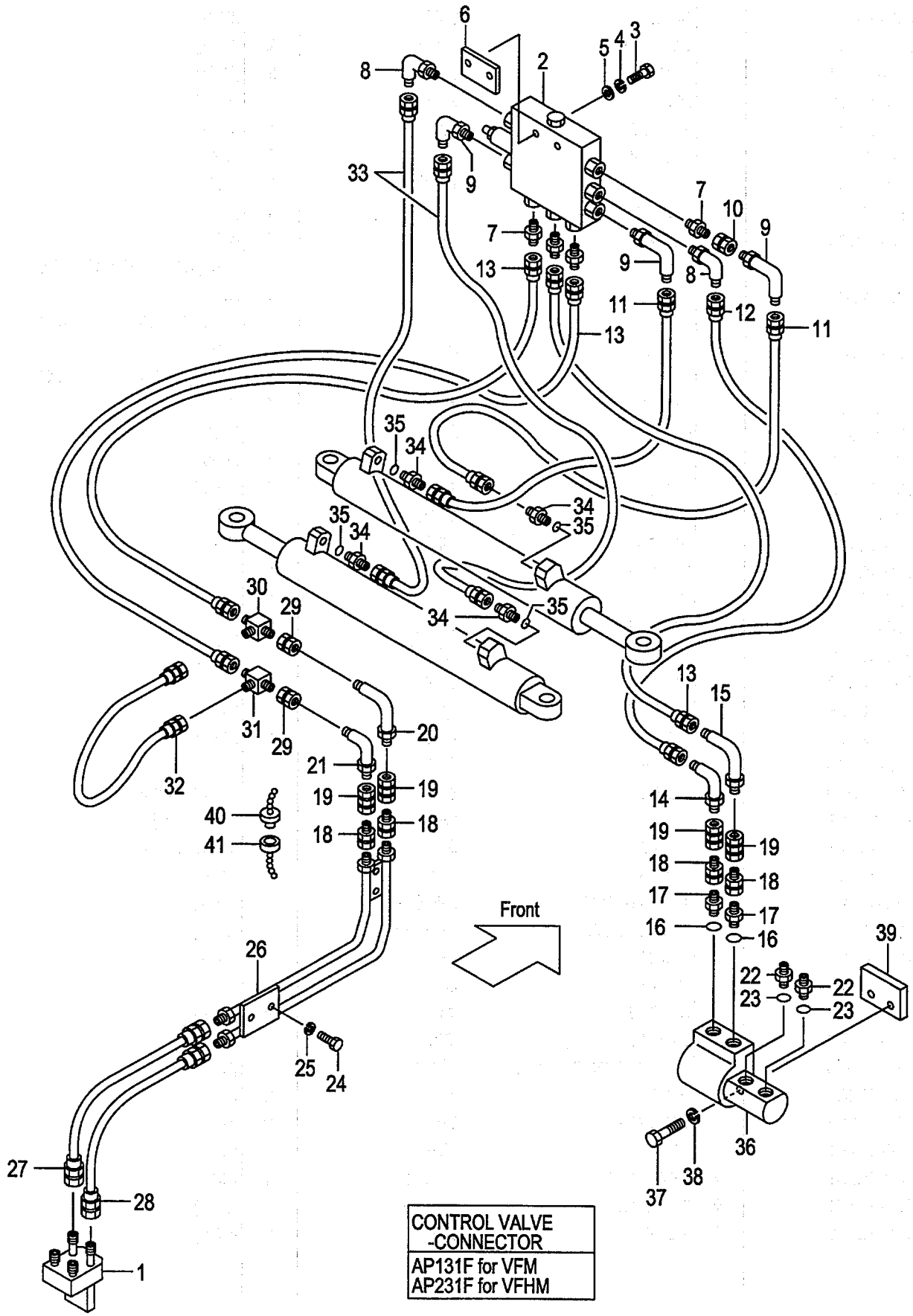

A:LG3A4(J) D:LG3D4(J)
B:LG3B4(J) E:LG3E4(J)
C:LG3C4(J) F:LG3F4(J)

FIG.67
(A503LGC0)

Item No	Part No.	Mark	Description		Req'd	Remarks : Serial No.
44	62150-12771	+	BRACKET	ﾌﾞﾗｹｯﾄ	1	[SSV/4DK]
45	61150-12511	+	PLATE	ﾌﾟﾚｰﾄ	1	[SSV/4DK]
46	62036-23501	+	BAR	ﾊﾞｰ	1	[SSV/4DK]

FIG.68 ROTATING CLAMP [PR2A7,PR2C7,PR2E7]

(A502PR10) ローテーティング゛クランプ゜

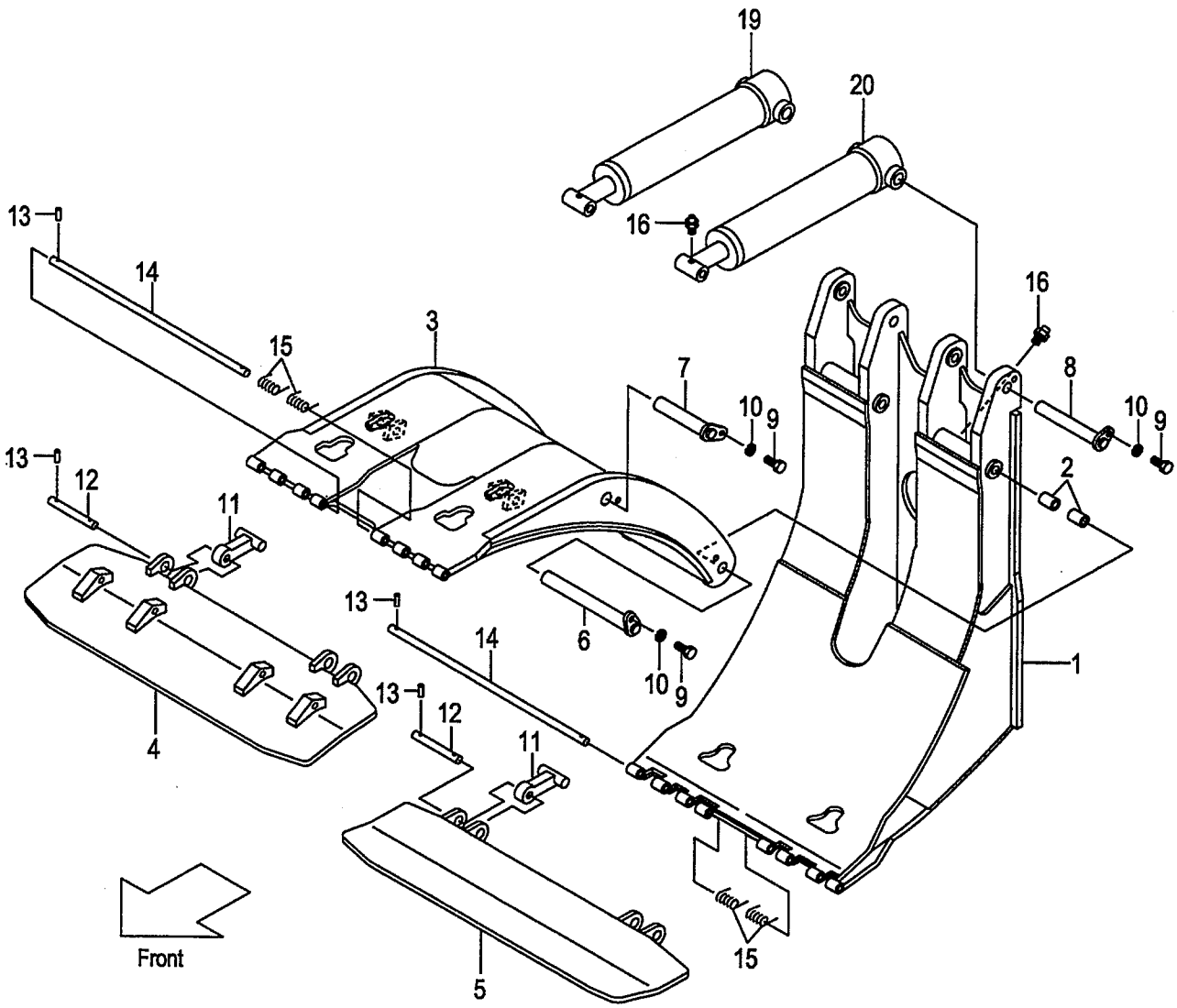

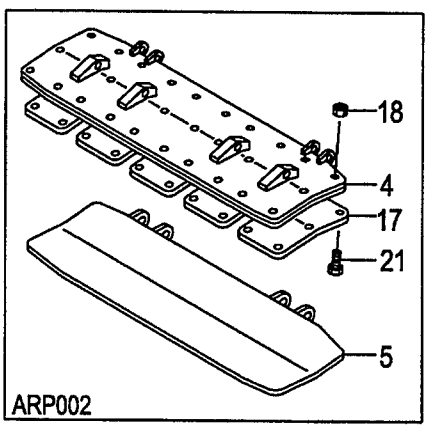

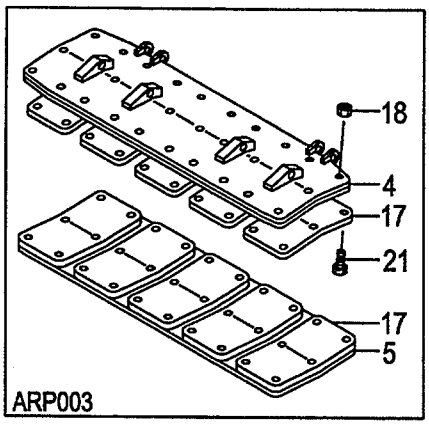

A:PR2A7(J)
B:PR2C7(J)
C:PR2E7(J)

FIG.68
(A502PR10)

Item No	Part No.	Mark	Description		Req'd	Remarks : Serial No.
A1	62A79-20101		CLAMP-ASSY,ROTATING		1	A
				ﾛｰﾃｰﾃｨﾝｸﾞｸﾗﾝﾌﾟｱｯｾﾝ		INC.1-3,6-16,33,34 & FIG.77
-	62C79-20101		CLAMP-ASSY,ROTATING		1	B
				ﾛｰﾃｰﾃｨﾝｸﾞｸﾗﾝﾌﾟｱｯｾﾝ		INC.1-3,6-16,33,34 & FIG.77
-	62E79-20101		CLAMP-ASSY,ROTATING		1	C
				ﾛｰﾃｰﾃｨﾝｸﾞｸﾗﾝﾌﾟｱｯｾﾝ		INC.1-3,6-16,33,34 & FIG.77
A2	62A79-20202		SUB-ASSY,RC		1	A
				ﾛｰﾃｰﾃｨﾝｸﾞｸﾗﾝﾌﾟｻﾌﾞｱｯｾﾝ		INC.1-3,6-16,33,34
-	62C79-20202		SUB-ASSY,RC		1	B
				ﾛｰﾃｰﾃｨﾝｸﾞｸﾗﾝﾌﾟｻﾌﾞｱｯｾﾝ		INC.1-3,6-16,33,34
-	62E79-20202		SUB-ASSY,RC		1	C
				ﾛｰﾃｰﾃｨﾝｸﾞｸﾗﾝﾌﾟｻﾌﾞｱｯｾﾝ		INC.1-3,6-16,33,34
1	62479-20312		FRAME	ﾌﾚｰﾑ	1	A
-	62479-20302		FRAME	ﾌﾚｰﾑ	1	B
-	62479-20322		FRAME	ﾌﾚｰﾑ	1	C
2	62439-22181		BUSH	ﾌﾞｯｼﾝｸﾞ	4	
3	62479-20471		ARM,LONG	ｱｰﾑ	1	A
-	62479-20461		ARM,LONG	ｱｰﾑ	1	B
-	62479-20481		ARM,LONG	ｱｰﾑ	1	C
4	62479-20611		PAD,UPPER	ﾊﾟｯﾄﾞ	1	
-	62479-20611		PAD,UPPER	ﾊﾟｯﾄﾞ	1	[ARP001]
-	62479-20641		PAD,UPPER	ﾊﾟｯﾄﾞ	1	[ARP002]
-	62479-20641		PAD,UPPER	ﾊﾟｯﾄﾞ	1	[ARP003]
5	62479-20601		PAD,LOWER	ﾊﾟｯﾄﾞ	1	
-	62479-20601		PAD,LOWER	ﾊﾟｯﾄﾞ	1	[ARP001]
-	62479-20601		PAD,LOWER	ﾊﾟｯﾄﾞ	1	[ARP002]
-	62479-20631		PAD,LOWER	ﾊﾟｯﾄﾞ	1	[ARP003]
6	62479-23861		PIN	ﾋﾟﾝ	2	
7	62479-23801		PIN	ﾋﾟﾝ	2	
8	62479-23821		PIN	ﾋﾟﾝ	2	
9	01100-12020		BOLT	ﾎﾞﾙﾄ	6	
10	02010-00012		WASHER	ﾜｯｼｬ	6	
11	62479-23901		STOPPER	ｽﾄｯﾊﾟ	4	
12	62479-24921		SHAFT	ｼｬﾌﾄ	4	
13	02270-04020		PIN	ﾋﾟﾝ	12	
14	62479-24901		SHAFT	ｼｬﾌﾄ	2	
15	62479-24951		SPRING	ｽﾌﾟﾘﾝｸﾞ	4	
16	214A8-52051		FITTING	ﾌｨｯﾃｨﾝｸﾞ	4	
17	62479-24502		RUBBER	ﾗﾊﾞｰ	5	[ARP002]
-	62479-24502		RUBBER	ﾗﾊﾞｰ	10	[ARP003]
18	01400-00010		NUT	ﾅｯﾄ	30	[ARP002]
-	01400-00010		NUT	ﾅｯﾄ	60	[ARP003]
19	62479-20821		CYL,RH	ｼﾘﾝﾀﾞ	1	A
						SEE FIG.70
-	62479-20801		CYL,RH	ｼﾘﾝﾀﾞ	1	B
						SEE FIG.70
-	62479-20841		CYL,RH	ｼﾘﾝﾀﾞ	1	C
						SEE FIG.70
20	62479-20831		CYL,LH	ｼﾘﾝﾀﾞ	1	A
						SEE FIG.70

FIG.68 ROTATING CLAMP [PR2A7,PR2C7,PR2E7]

(A502PR10) ローテーティング゛クランプ゜

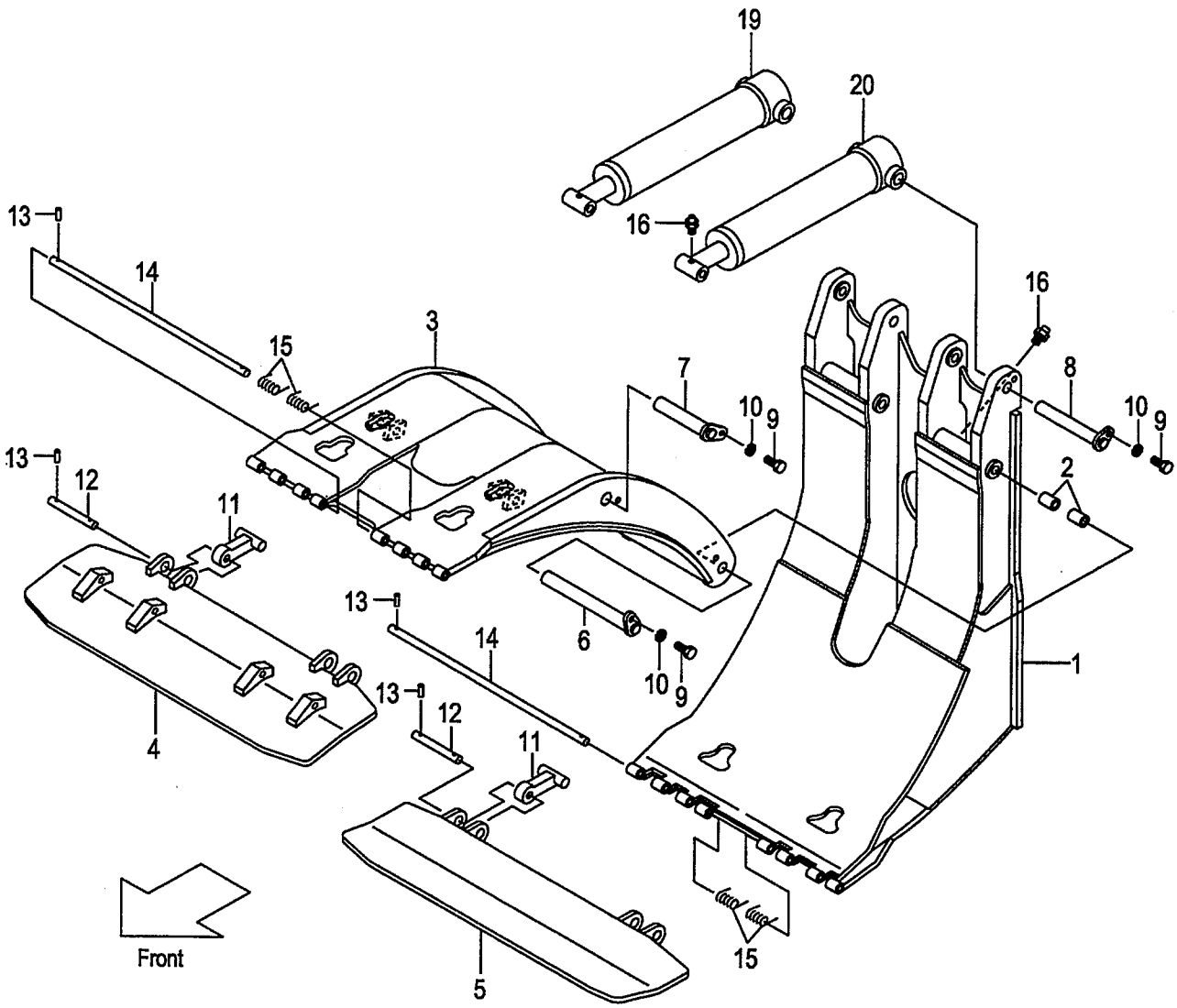

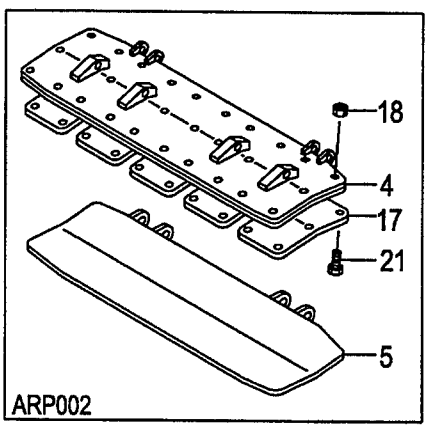

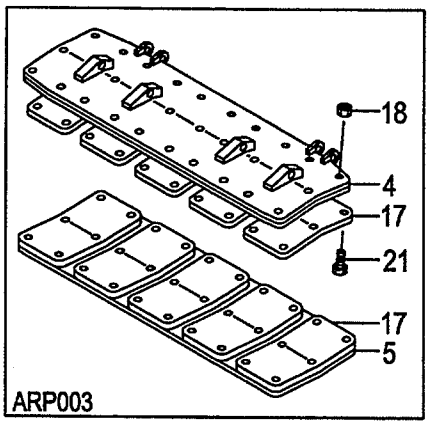

A:PR2A7(J)
B:PR2C7(J)
C:PR2E7(J)

FIG.68
(A502PR10)

Item No	Part No.	Mark	Description		Req'd	Remarks : Serial No.
-	62479-20811		CYL,LH	ｼﾘﾝﾀﾞ	1	B
						SEE FIG.70
-	62479-20851		CYL,LH	ｼﾘﾝﾀﾞ	1	C
						SEE FIG.70
21	01120-10014		BOLT	ﾎﾞﾙﾄ	30	[ARP002]
-	01120-10014		BOLT	ﾎﾞﾙﾄ	60	[ARP003]
22	63110-18901	+	CHART,LOAD	ﾁｬｰﾄ	1	
-	514A3-82301	+	CHART,LOAD	ﾁｬｰﾄ	1	[EXB/ENGLISH][EXC/ENGLISH]
-	514A3-82301	+	CHART,LOAD	ﾁｬｰﾄ	1	[EXE/ENGLISH][EXN/ENGLISH]
-	63110-18911	+	CHART,LOAD	ﾁｬｰﾄ	1	[EXA/ENGLISH]
-	524T3-84031	+	CHART,LOAD	ﾁｬｰﾄ	1	(RUSSIAN)
-	63110-18921	+	CHART,LOAD	ﾁｬｰﾄ	1	(CHINESE)
-	514A3-82321	+	CHART,LOAD	ﾁｬｰﾄ	1	(GERMAN)
-	514A3-82341	+	CHART,LOAD	ﾁｬｰﾄ	1	(FRENCH)
-	514A3-82331	+	CHART,LOAD	ﾁｬｰﾄ	1	(SPANISH)
-	514A3-82361	+	CHART,LOAD	ﾁｬｰﾄ	1	(DANISH)
-	514A3-82381	+	CHART,LOAD	ﾁｬｰﾄ	1	(GREEK)
-	514A3-82371	+	CHART,LOAD	ﾁｬｰﾄ	1	(ITALIAN)
-	514A3-82351	+	CHART,LOAD	ﾁｬｰﾄ	1	(DUTCH)
-	514A3-82391	+	CHART,LOAD	ﾁｬｰﾄ	1	(PORTUGUESE)
23	02432-01008	+	RIVET	ﾘﾍﾞｯﾄ	4	
24	09210-10300	+	PLATE,NAME	ﾌﾟﾚｰﾄ	1	
-	63110-19201	+	PLATE,NAME	ﾌﾟﾚｰﾄ	1	(ENGLISH)
-	63110-32111	+	PLATE,NAME	ﾌﾟﾚｰﾄ	1	(RUSSIAN)
-	09201-06201	+	PLATE,NAME	ﾌﾟﾚｰﾄ	1	(CHINESE)
-	63110-19221	+	PLATE,NAME	ﾌﾟﾚｰﾄ	1	(GERMAN)
-	63110-19261	+	PLATE,NAME	ﾌﾟﾚｰﾄ	1	(FRENCH)
-	63110-19241	+	PLATE,NAME	ﾌﾟﾚｰﾄ	1	(SPANISH)
-	63110-19301	+	PLATE,NAME	ﾌﾟﾚｰﾄ	1	(DANISH)
-	63110-19341	+	PLATE,NAME	ﾌﾟﾚｰﾄ	1	(GREEK)
-	63110-19321	+	PLATE,NAME	ﾌﾟﾚｰﾄ	1	(ITALIAN)
-	63110-19281	+	PLATE,NAME	ﾌﾟﾚｰﾄ	1	(DUTCH)
-	63110-19361	+	PLATE,NAME	ﾌﾟﾚｰﾄ	1	(PORTUGUESE)
25	63110-18521	+	PLATE,CAUTION	ﾌﾟﾚｰﾄ	1	(ENGLISH)
-	63110-32121	+	PLATE,CAUTION	ﾌﾟﾚｰﾄ	1	(RUSSIAN)
-	63110-18511	+	PLATE,CAUTION	ﾌﾟﾚｰﾄ	1	(CHINESE)
-	63110-19371	+	PLATE,CAUTION	ﾌﾟﾚｰﾄ	1	(GERMAN)
-	63110-19391	+	PLATE,CAUTION	ﾌﾟﾚｰﾄ	1	(FRENCH)
-	63110-19411	+	PLATE,CAUTION	ﾌﾟﾚｰﾄ	1	(SPANISH)
-	63110-19381	+	PLATE,CAUTION	ﾌﾟﾚｰﾄ	1	(DANISH)
-	63110-19441	+	PLATE,CAUTION	ﾌﾟﾚｰﾄ	1	(GREEK)
-	63110-19431	+	PLATE,CAUTION	ﾌﾟﾚｰﾄ	1	(ITALIAN)
-	63110-19401	+	PLATE,CAUTION	ﾌﾟﾚｰﾄ	1	(DUTCH)
-	63110-19421	+	PLATE,CAUTION	ﾌﾟﾚｰﾄ	1	(PORTUGUESE)
26	63110-19151	+	PLATE,CAUTION,SELF	ﾌﾟﾚｰﾄ	1	[4DK]
27	63110-19761	+	KNOB	ﾉﾌﾞ	1	
28	63110-19961	+	DECAL	ﾃﾞｶﾙ	1	
29	63110-19131	+	KNOB	ﾉﾌﾞ	1	
30	63110-19691	+	KNOB	ﾉﾌﾞ	1	
31	63110-19891	+	DECAL	ﾃﾞｶﾙ	1	

FIG.68 ROTATING CLAMP [PR2A7,PR2C7,PR2E7]

(A502PR10) ローテーティング゛クランプ゜

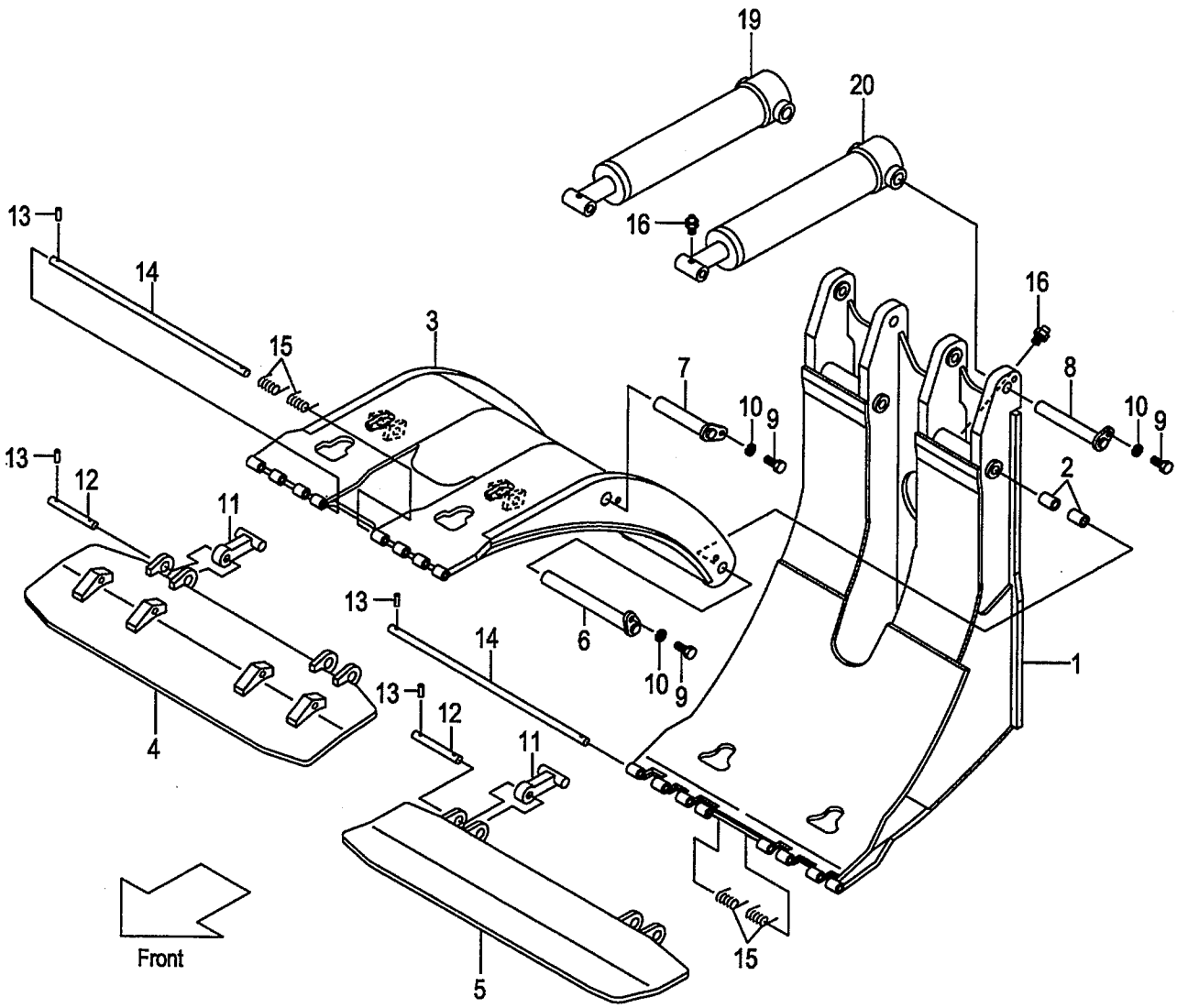

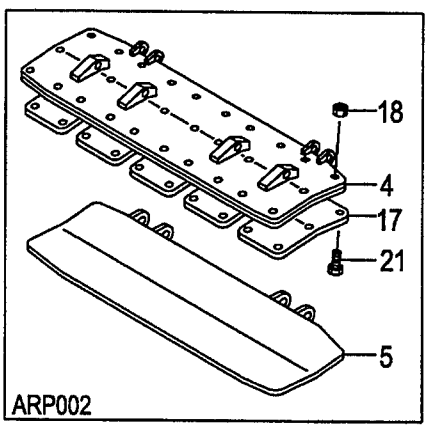

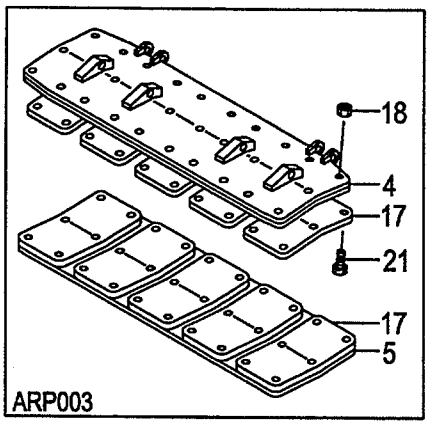

A:PR2A7(J)
B:PR2C7(J)
C:PR2E7(J)

FIG.68
(A502PR10)

Item No	Part No.	Mark	Description		Req'd	Remarks : Serial No.
32	214A7-42181	+	KNOB	ﾉﾌﾞ	1	
33	62479-23591	+	COLLAR	ｶﾗｰ	2	
34	04901-00160	+	NIPPLE	ﾆｯﾌﾟﾙ	2	
35	62479-27001	+	DECAL,CAUTION	ﾃﾞｶﾙ	1	
36	27419-12072	+	DECAL,CAUTION	ﾃﾞｶﾙ	2	

FIG.69 ROTATING CLAMP [PR2B7,PR2D7,PR2F7]

(A502PR20) ﾛｰﾃｰﾃｨﾝｸﾞｸﾗﾝﾌﾟ

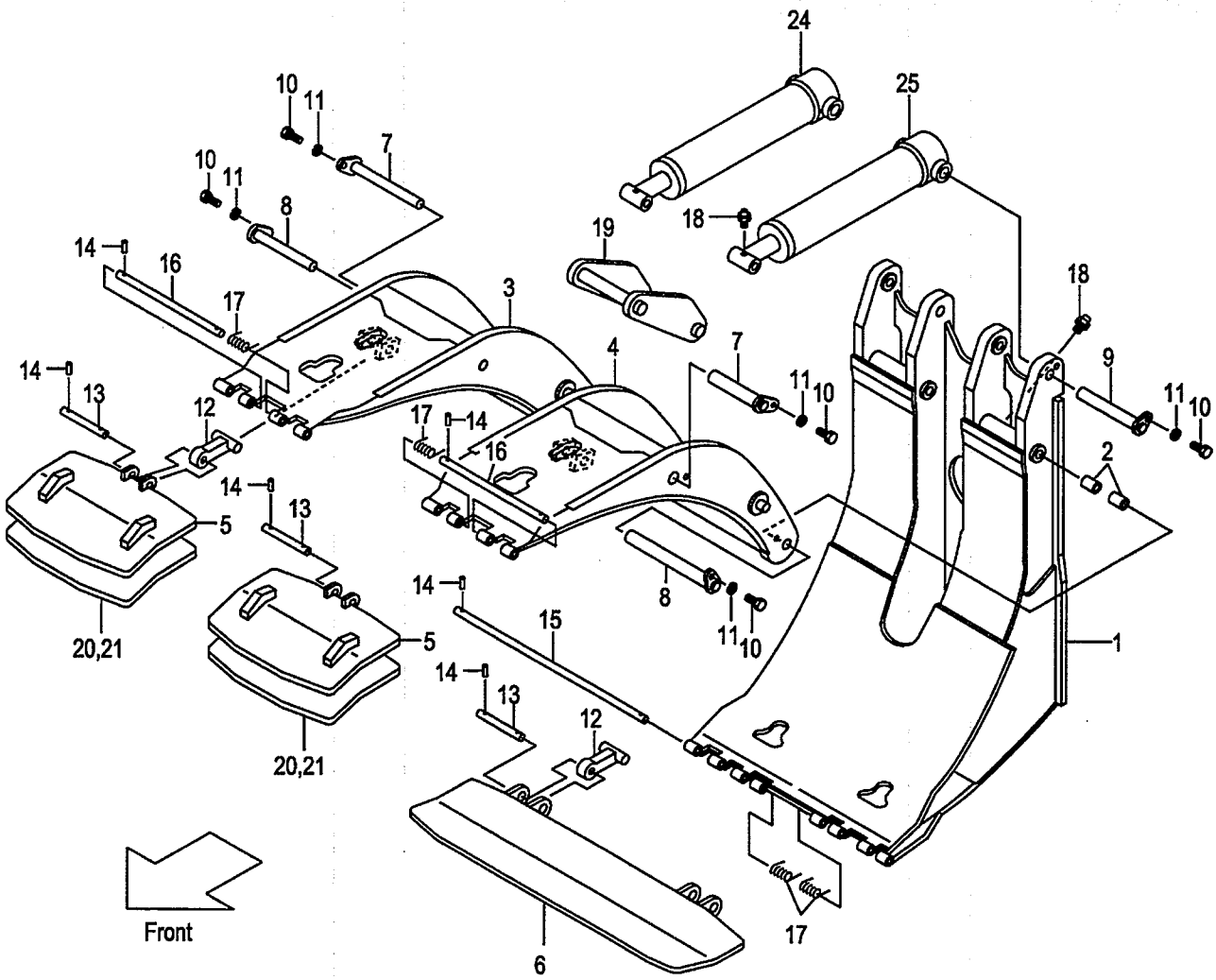

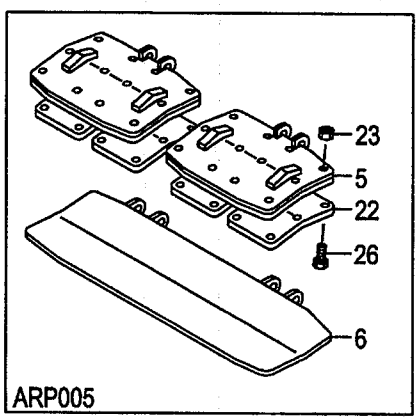

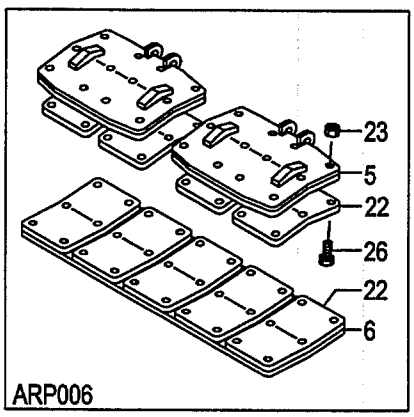

A:PR2B7(J)
B:PR2D7(J)
C:PR2F7(J)

FIG.69
(A502PR20)

Item No	Part No.	Mark	Description		Req'd	Remarks : Serial No.
A1	62B79-20101		CLAMP-ASSY,ROTATING		1	A
				ﾛｰﾃｰﾃｨﾝｸﾞｸﾗﾝﾌﾟｱｯｾﾝ		INC.1-3,6-21,38,39 & FIG.77
-	62D79-20101		CLAMP-ASSY,ROTATING		1	B
				ﾛｰﾃｰﾃｨﾝｸﾞｸﾗﾝﾌﾟｱｯｾﾝ		INC.1-3,6-21,38,39 & FIG.77
-	62F79-20101		CLAMP-ASSY,ROTATING		1	C
				ﾛｰﾃｰﾃｨﾝｸﾞｸﾗﾝﾌﾟｱｯｾﾝ		INC.1-3,6-21,38,39 & FIG.77
A2	62B79-20202		SUB-ASSY,RC		1	A
				ﾛｰﾃｰﾃｨﾝｸﾞｸﾗﾝﾌﾟｻﾌﾞｱｯｾﾝ		INC.1-3,6-21,38,39
-	62D79-20202		SUB-ASSY,RC		1	B
				ﾛｰﾃｰﾃｨﾝｸﾞｸﾗﾝﾌﾟｻﾌﾞｱｯｾﾝ		INC.1-3,6-21,38,39
-	62F79-20202		SUB-ASSY,RC		1	C
				ﾛｰﾃｰﾃｨﾝｸﾞｸﾗﾝﾌﾟｻﾌﾞｱｯｾﾝ		INC.1-3,6-21,38,39
1	62479-20312		FRAME	ﾌﾚｰﾑ	1	A
-	62479-20302		FRAME	ﾌﾚｰﾑ	1	B
-	62479-20322		FRAME	ﾌﾚｰﾑ	1	C
2	62439-22181		BUSH	ﾌﾞｯｼﾝｸﾞ	4	
3	62479-20421		ARM,LONG,RH	ｱｰﾑ	1	A
-	62479-20401		ARM,LONG,RH	ｱｰﾑ	1	B
-	62479-20441		ARM,LONG,RH	ｱｰﾑ	1	C
4	62479-20431		ARM,LONG,LH	ｱｰﾑ	1	A
-	62479-20411		ARM,LONG,LH	ｱｰﾑ	1	B
-	62479-20451		ARM,LONG,LH	ｱｰﾑ	1	C
5	62479-20621		PAD,UPPER	ﾊﾟｯﾄﾞ	2	
-	62479-20621		PAD,UPPER	ﾊﾟｯﾄﾞ	2	[ARP004]
-	62479-20651		PAD,UPPER	ﾊﾟｯﾄﾞ	2	[ARP005][ARP006]
6	62479-20601		PAD,LOWER	ﾊﾟｯﾄﾞ	1	
-	62479-20601		PAD,LOWER	ﾊﾟｯﾄﾞ	1	[ARP004][ARP005]
-	62479-20631		PAD,LOWER	ﾊﾟｯﾄﾞ	1	[ARP006]
7	62479-23841		PIN	ﾋﾟﾝ	2	
8	62479-23801		PIN	ﾋﾟﾝ	2	
9	62479-23821		PIN	ﾋﾟﾝ	2	
10	01100-12020		BOLT	ﾎﾞﾙﾄ	6	
11	02010-00012		WASHER	ﾜｯｼｬ	6	
12	62479-23901		STOPPER	ｽﾄｯﾊﾟ	4	
13	62479-24921		SHAFT	ｼｬﾌﾄ	4	
14	02270-04020		PIN	ﾋﾟﾝ	14	
15	62479-24901		SHAFT	ｼｬﾌﾄ	1	
16	62479-24911		SHAFT	ｼｬﾌﾄ	2	
17	62479-24951		SPRING	ｽﾌﾟﾘﾝｸﾞ	4	
18	214A8-52051		FITTING	ﾌｨｯﾃｨﾝｸﾞ	4	
19	62479-23701		LINK	ﾘﾝｸ	1	
20	62479-23751		RUBBER	ﾗﾊﾞｰ	2	
21	214A8-42661		BOLT	ﾎﾞﾙﾄ	2	
22	62479-24502		RUBBER	ﾗﾊﾞｰ	4	[ARP005]
-	62479-24502		RUBBER	ﾗﾊﾞｰ	9	[ARP006]
23	01400-00010		NUT	ﾅｯﾄ	24	[ARP005]
-	01400-00010		NUT	ﾅｯﾄ	54	[ARP006]
24	62479-20821		CYL,RH	ｼﾘﾝﾀﾞ	1	A
						SEE FIG.70

FIG.69 ROTATING CLAMP [PR2B7,PR2D7,PR2F7]

(A502PR20) ﾛｰﾃｰﾃｨﾝｸﾞｸﾗﾝﾌﾟ

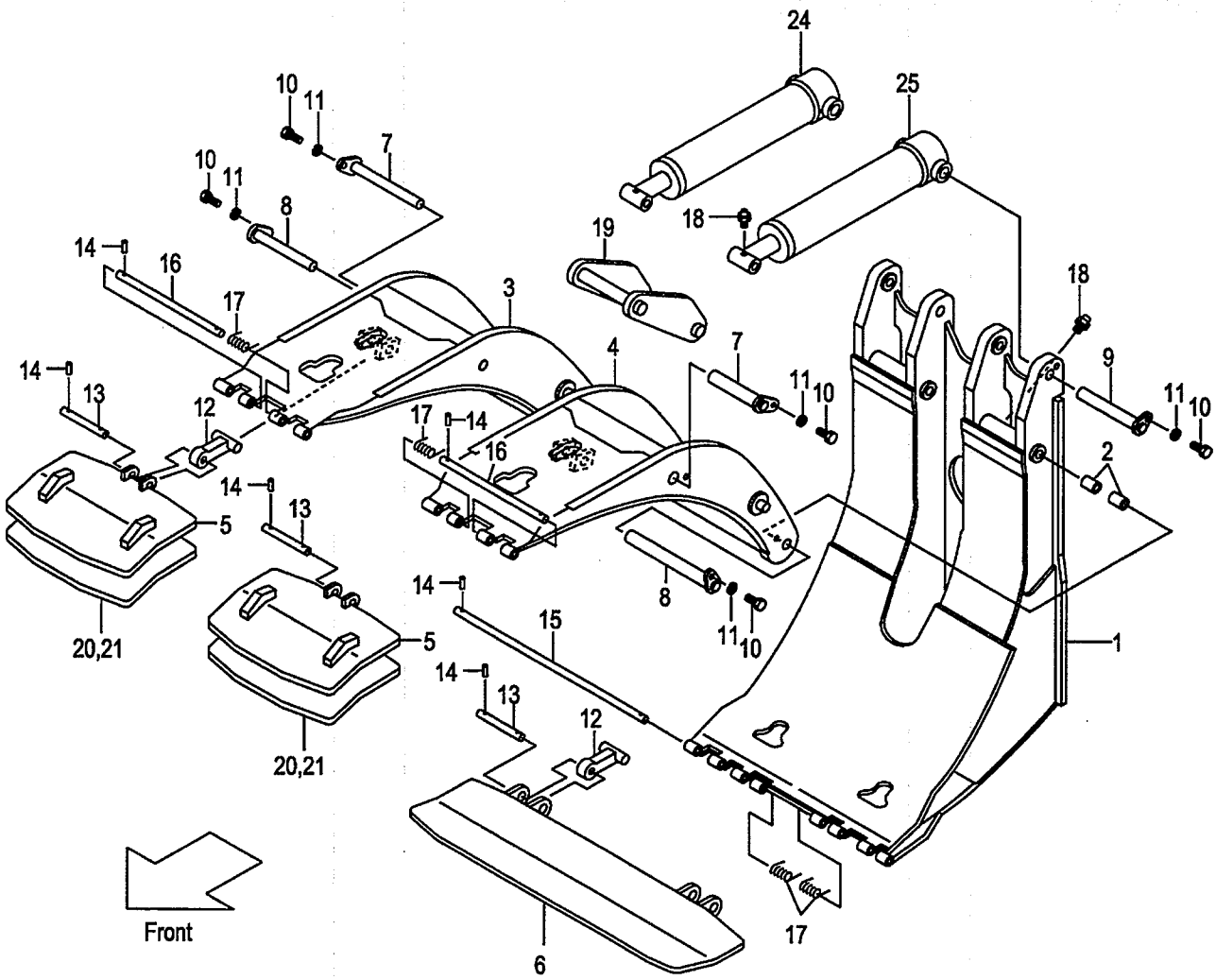

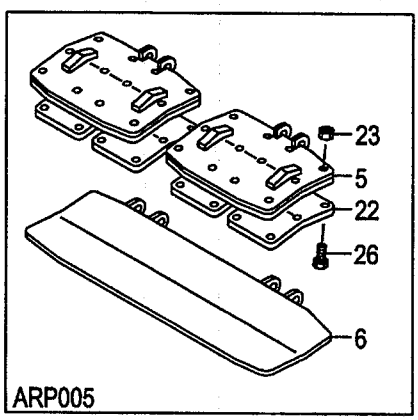

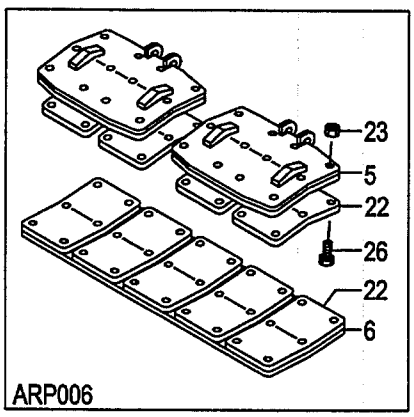

A:PR2B7(J)
B:PR2D7(J)
C:PR2F7(J)

FIG.69
(A502PR20)

Item No	Part No.	Mark	Description		Req'd	Remarks : Serial No.
-	62479-20801		CYL,RH	ｼﾘﾝﾀﾞ	1	B
						SEE FIG.70
-	62479-20841		CYL,RH	ｼﾘﾝﾀﾞ	1	C
						SEE FIG.70
25	62479-20831		CYL,LH	ｼﾘﾝﾀﾞ	1	A
						SEE FIG.70
-	62479-20811		CYL,LH	ｼﾘﾝﾀﾞ	1	B
						SEE FIG.70
-	62479-20851		CYL,LH	ｼﾘﾝﾀﾞ	1	C
						SEE FIG.70
26	01120-10014		BOLT	ﾎﾞﾙﾄ	24	[ARP005]
-	01120-10014		BOLT	ﾎﾞﾙﾄ	54	[ARP006]
27	63110-18901	+	CHART,LOAD	ﾁｬｰﾄ	1	
-	514A3-82301	+	CHART,LOAD	ﾁｬｰﾄ	1	[EXB/ENGLISH][EXC/ENGLISH]
-	514A3-82301	+	CHART,LOAD	ﾁｬｰﾄ	1	[EXE/ENGLISH][EXN/ENGLISH]
-	63110-18911	+	CHART,LOAD	ﾁｬｰﾄ	1	[EXA/ENGLISH]
-	524T3-84031	+	CHART,LOAD	ﾁｬｰﾄ	1	(RUSSIAN)
-	63110-18921	+	CHART,LOAD	ﾁｬｰﾄ	1	(CHINESE)
-	514A3-82321	+	CHART,LOAD	ﾁｬｰﾄ	1	(GERMAN)
-	514A3-82341	+	CHART,LOAD	ﾁｬｰﾄ	1	(FRENCH)
-	514A3-82331	+	CHART,LOAD	ﾁｬｰﾄ	1	(SPANISH)
-	514A3-82361	+	CHART,LOAD	ﾁｬｰﾄ	1	(DANISH)
-	514A3-82381	+	CHART,LOAD	ﾁｬｰﾄ	1	(GREEK)
-	514A3-82371	+	CHART,LOAD	ﾁｬｰﾄ	1	(ITALIAN)
-	514A3-82351	+	CHART,LOAD	ﾁｬｰﾄ	1	(DUTCH)
-	514A3-82391	+	CHART,LOAD	ﾁｬｰﾄ	1	(PORTUGUESE)
28	02432-01008	+	RIVET	ﾘﾍﾞｯﾄ	4	
29	09210-10300	+	PLATE,NAME	ﾌﾟﾚｰﾄ	1	
-	63110-19201	+	PLATE,NAME	ﾌﾟﾚｰﾄ	1	(ENGLISH)
-	63110-32111	+	PLATE,NAME	ﾌﾟﾚｰﾄ	1	(RUSSIAN)
-	09201-06201	+	PLATE,NAME	ﾌﾟﾚｰﾄ	1	(CHINESE)
-	63110-19221	+	PLATE,NAME	ﾌﾟﾚｰﾄ	1	(GERMAN)
-	63110-19261	+	PLATE,NAME	ﾌﾟﾚｰﾄ	1	(FRENCH)
-	63110-19241	+	PLATE,NAME	ﾌﾟﾚｰﾄ	1	(SPANISH)
-	63110-19301	+	PLATE,NAME	ﾌﾟﾚｰﾄ	1	(DANISH)
-	63110-19341	+	PLATE,NAME	ﾌﾟﾚｰﾄ	1	(GREEK)
-	63110-19321	+	PLATE,NAME	ﾌﾟﾚｰﾄ	1	(ITALIAN)
-	63110-19281	+	PLATE,NAME	ﾌﾟﾚｰﾄ	1	(DUTCH)
-	63110-19361	+	PLATE,NAME	ﾌﾟﾚｰﾄ	1	(PORTUGUESE)
30	63110-18521	+	PLATE,CAUTION	ﾌﾟﾚｰﾄ	1	(ENGLISH)
-	63110-32121	+	PLATE,CAUTION	ﾌﾟﾚｰﾄ	1	(RUSSIAN)
-	63110-18511	+	PLATE,CAUTION	ﾌﾟﾚｰﾄ	1	(CHINESE)
-	63110-19371	+	PLATE,CAUTION	ﾌﾟﾚｰﾄ	1	(GERMAN)
-	63110-19391	+	PLATE,CAUTION	ﾌﾟﾚｰﾄ	1	(FRENCH)
-	63110-19411	+	PLATE,CAUTION	ﾌﾟﾚｰﾄ	1	(SPANISH)
-	63110-19381	+	PLATE,CAUTION	ﾌﾟﾚｰﾄ	1	(DANISH)
-	63110-19441	+	PLATE,CAUTION	ﾌﾟﾚｰﾄ	1	(GREEK)
-	63110-19431	+	PLATE,CAUTION	ﾌﾟﾚｰﾄ	1	(ITALIAN)
-	63110-19401	+	PLATE,CAUTION	ﾌﾟﾚｰﾄ	1	(DUTCH)
-	63110-19421	+	PLATE,CAUTION	ﾌﾟﾚｰﾄ	1	(PORTUGUESE)

FIG.69 ROTATING CLAMP [PR2B7,PR2D7,PR2F7]

(A502PR20) ﾛｰﾃｰﾃｨﾝｸﾞｸﾗﾝﾌﾟ

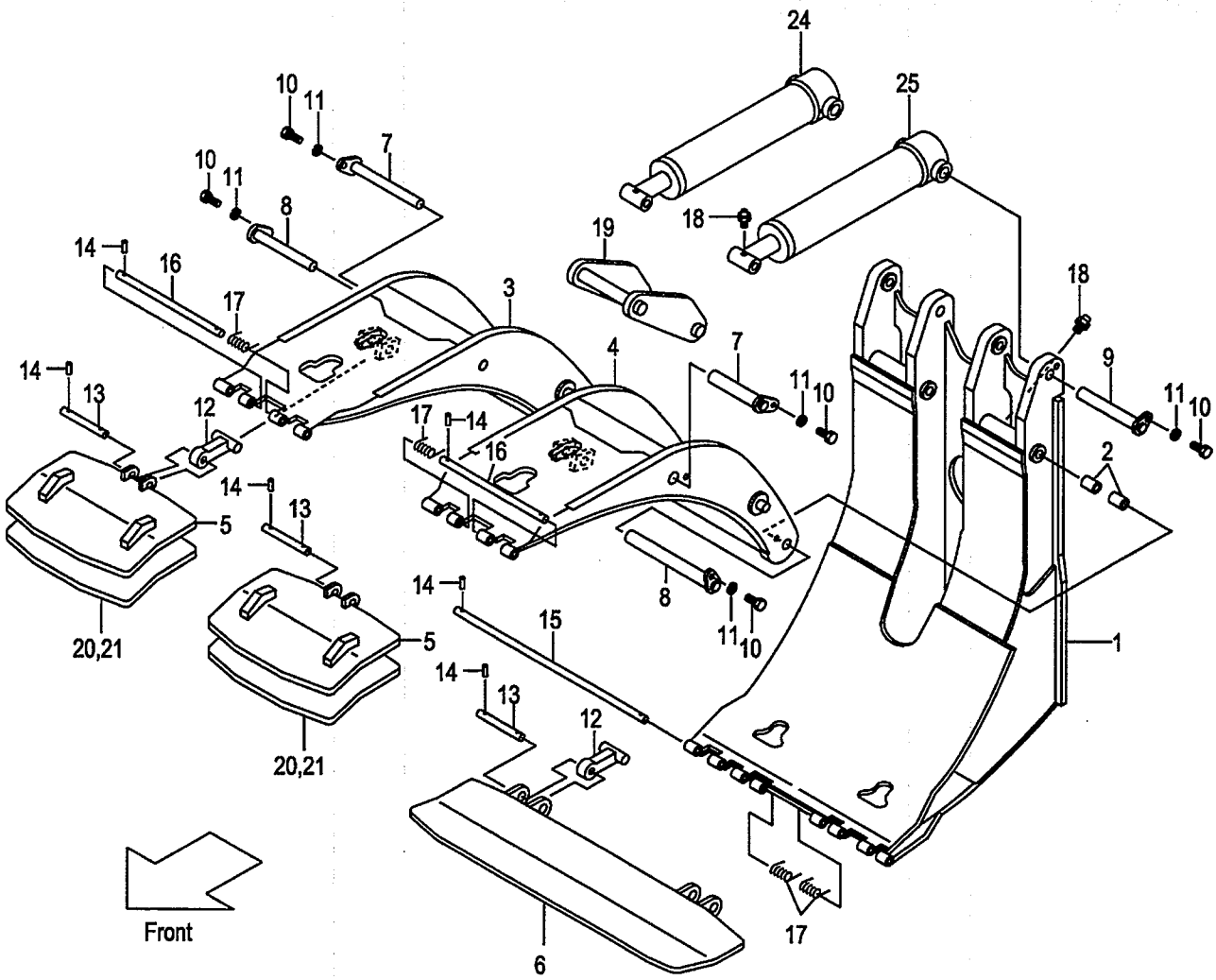

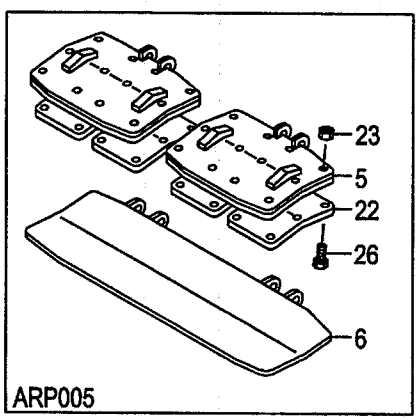

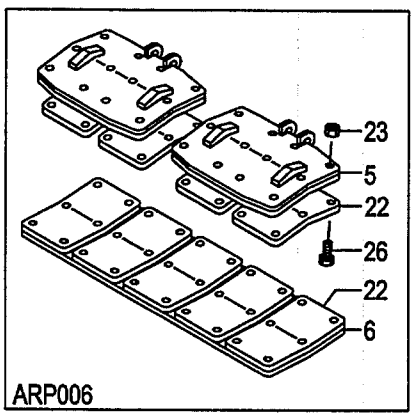

A:PR2B7(J)
B:PR2D7(J)
C:PR2F7(J)

FIG.69
(A502PR20)

Item No	Part No.	Mark	Description		Req'd	Remarks : Serial No.
31	63110-19151	+	PLATE,CAUTION,SELF	ﾌﾟﾚｰﾄ	1	[4DK]
32	63110-19761	+	KNOB	ﾉﾌﾞ	1	
33	63110-19961	+	DECAL	ﾃﾞｶﾙ	1	
34	63110-19131	+	KNOB	ﾉﾌﾞ	1	
35	63110-19691	+	KNOB	ﾉﾌﾞ	1	
36	63110-19891	+	DECAL	ﾃﾞｶﾙ	1	
37	214A7-42181	+	KNOB	ﾉﾌﾞ	1	
38	62479-23591	+	COLLAR	ｶﾗｰ	2	
39	04901-00160	+	NIPPLE	ﾆｯﾌﾟﾙ	2	
40	62479-27001	+	DECAL,CAUTION	ﾃﾞｶﾙ	1	
41	27419-12072	+	DECAL,CAUTION	ﾃﾞｶﾙ	2	

FIG.70 CYLINDER [PR2A7-PR2F7,PR3A7-PR3F7]

(A502PR30) ｼﾘﾝﾀﾞ

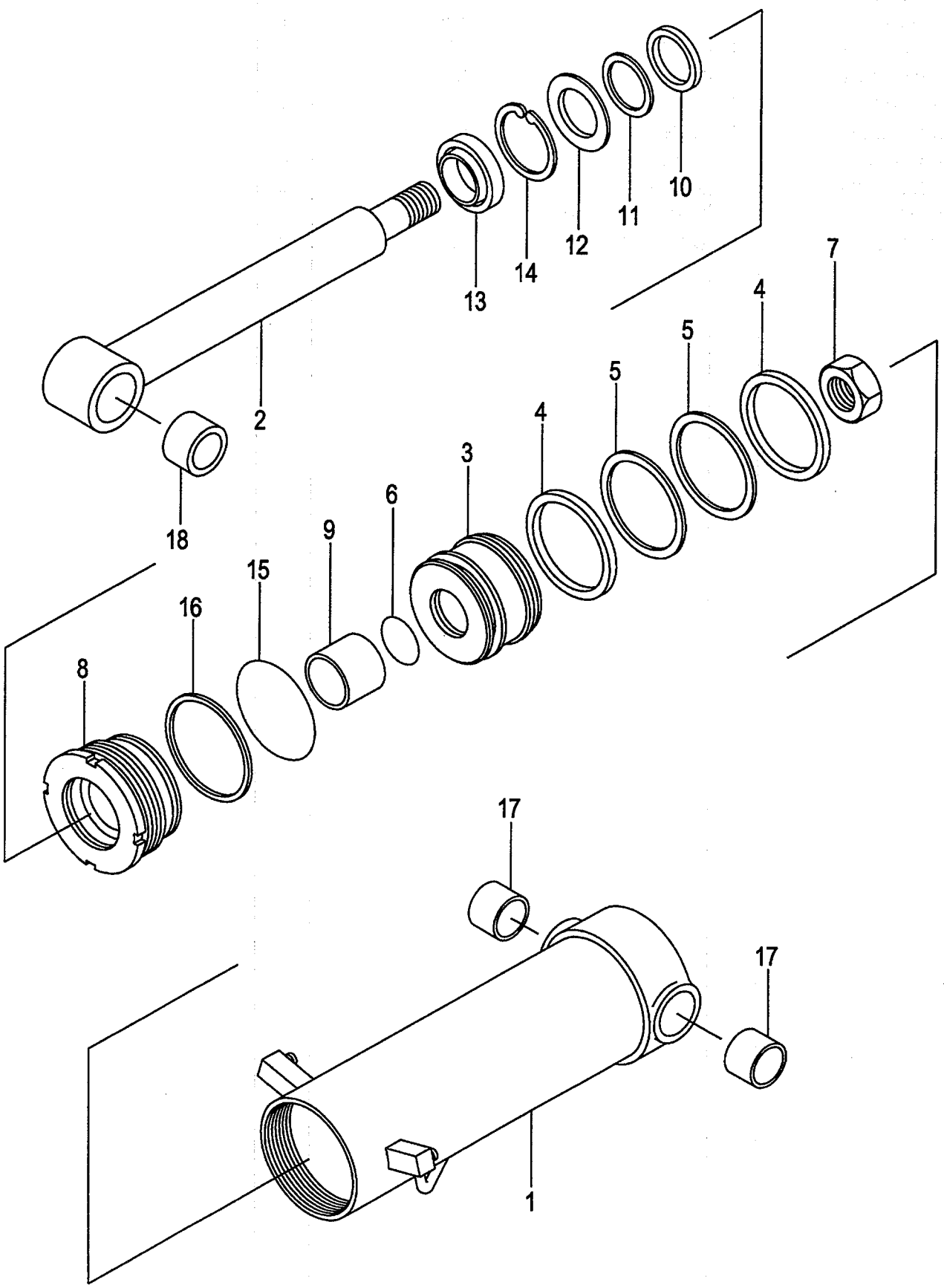

A:PR2A7(J) PR3A7(J) D:PR2D7(J) PR3D7(J)
B:PR2B7(J) PR3B7(J) E:PR2E7(J) PR3E7(J)
C:PR2C7(J) PR3C7(J) F:PR2F7(J) PR3F7(J)

FIG.70
(A502PR30)

Item No	Part No.	Mark	Description		Req'd	Remarks : Serial No.
A1	62479-20821		CYL-ASSY,RH	ｼﾘﾝﾀﾞｱｯｾﾝ	1	A,B INC.1-18
-	62479-20801		CYL-ASSY,RH	ｼﾘﾝﾀﾞｱｯｾﾝ	1	C,D INC.1-18
-	62479-20841		CYL-ASSY,RH	ｼﾘﾝﾀﾞｱｯｾﾝ	1	E,F INC.1-18
A2	62479-20831		CYL-ASSY,LH	ｼﾘﾝﾀﾞｱｯｾﾝ	1	A,B INC.1-18
-	62479-20811		CYL-ASSY,LH	ｼﾘﾝﾀﾞｱｯｾﾝ	1	C,D INC.1-18
-	62479-20851		CYL-ASSY,LH	ｼﾘﾝﾀﾞｱｯｾﾝ	1	E,F INC.1-18
1	62479-25022		TUBE,RH	ﾁｭｰﾌﾞ	1	A,B
-	62479-25002		TUBE,RH	ﾁｭｰﾌﾞ	1	C,D
-	62479-25042		TUBE,RH	ﾁｭｰﾌﾞ	1	E,F
-	62479-25032		TUBE,LH	ﾁｭｰﾌﾞ	1	A,B
-	62479-25012		TUBE,LH	ﾁｭｰﾌﾞ	1	C,D
-	62479-25052		TUBE,LH	ﾁｭｰﾌﾞ	1	E,F
2	62479-25111		ROD,PISTON	ﾛｯﾄﾞ	2	A,B
-	62479-25101		ROD,PISTON	ﾛｯﾄﾞ	2	C,D
-	62479-25121		ROD,PISTON	ﾛｯﾄﾞ	2	E,F
3	62479-25521		PISTON	ﾋﾟｽﾄﾝ	2	
4	25808-43111		PACKING	ﾊﾟｯｷﾝｸﾞ	4	
5	25808-43121		RING,BACK-UP	ﾘﾝｸﾞ	4	
6	03320-00400		O-RING	Oﾘﾝｸﾞ	2	
7	62479-25541		NUT	ﾅｯﾄ	2	A,B,C,D
-	62479-25251		NUT	ﾅｯﾄ	2	E,F
8	62459-23271		CAP	ｷｬｯﾌﾟ	2	
9	59595-55301		BUSH	ﾌﾞｯｼﾝｸﾞ	2	
10	25958-52201		PACKING	ﾊﾟｯｷﾝｸﾞ	2	
11	25958-52211		RING,BACK-UP	ﾘﾝｸﾞ	2	
12	25958-52221		RETAINER	ﾘﾃｰﾅ	2	
13	24469-42701		SEAL,DUST	ｼｰﾙ	2	
14	02110-00062		RING,SNAP	ｽﾅｯﾌﾟﾘﾝｸﾞ	2	
15	03350-00850		O-RING	Oﾘﾝｸﾞ	2	
16	03370-00850		RING,BACK-UP	ﾘﾝｸﾞ	2	
17	62439-22181		BUSH	ﾌﾞｯｼﾝｸﾞ	4	
18	62479-25601		BUSH	ﾌﾞｯｼﾝｸﾞ	2	

FIG.71 HYDRAULIC LINE (CONNECTOR-CYLINDER & MOTOR)

(A502PR40) ﾊｲﾄﾞﾛﾘｯｸﾗｲﾝ (ｺﾈｸﾀｰｼﾘﾝﾀﾞｰ&ﾓｰﾀ)

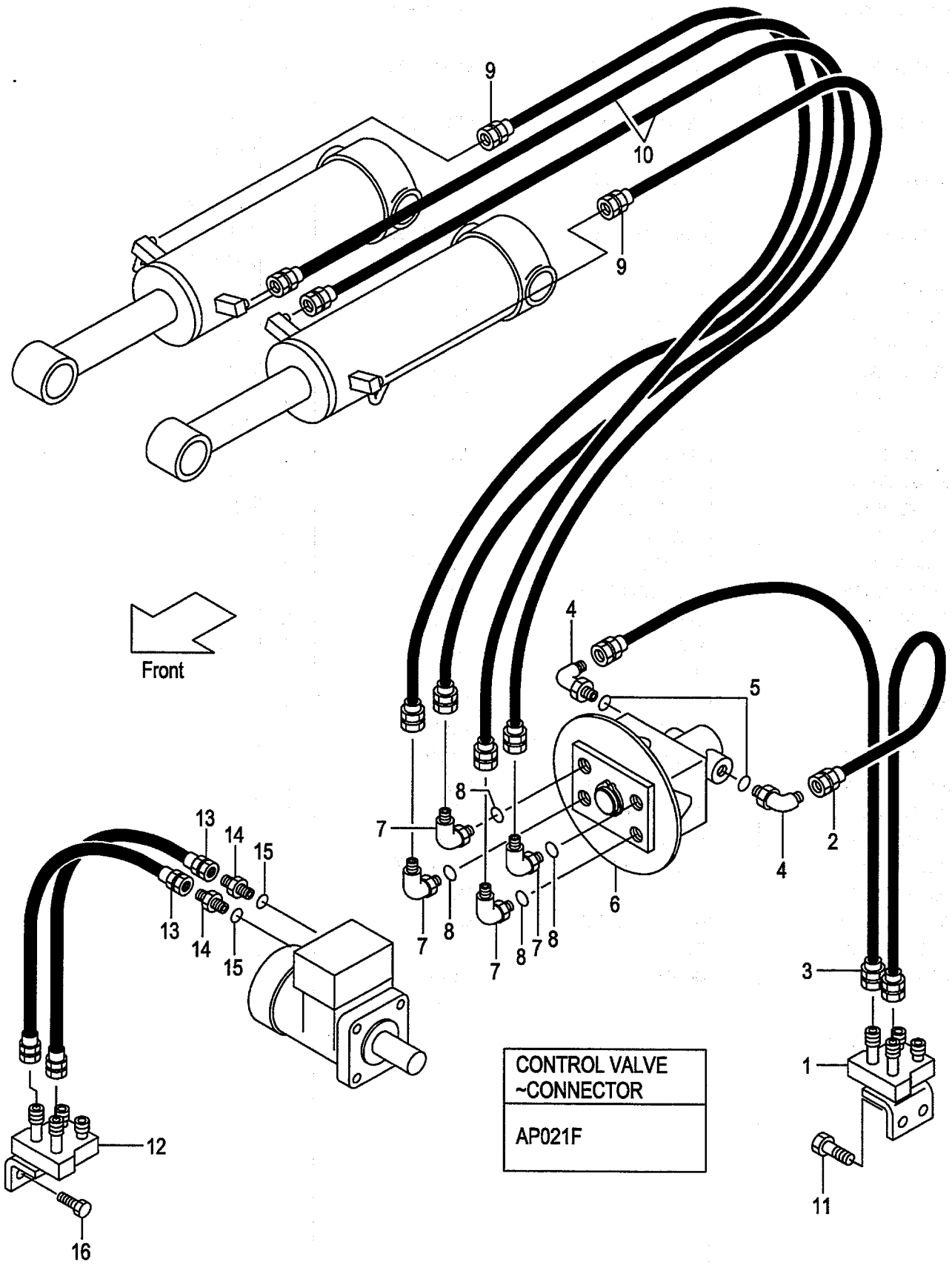

A:PR2A7(J) D:PR2D7(J)
B:PR2B7(J) E:PR2E7(J)
C:PR2C7(J) F:PR2F7(J)

FIG.71
(A502PR40)

Item No	Part No.	Mark	Description		Req'd	Remarks : Serial No.
1	621F0-12011		STUD	ｽﾀｯﾄﾞ	1	
2	63130-21070		HOSE	ﾎｰｽ	1	
3	63130-21070		HOSE	ﾎｰｽ	1	
4	04150-00303		ELBOW	ｴﾙﾎﾞ	2	
5	03320-00140		O-RING	Oﾘﾝｸﾞ	2	
6	61439-20702		VALVE,ROTARY	ﾊﾞﾙﾌﾞ	1	SEE FIG.75
7	63110-12311		ELBOW	ｴﾙﾎﾞ	4	
8	03320-00140		O-RING	Oﾘﾝｸﾞ	4	
9	63130-31105		HOSE	ﾎｰｽ	2	A,B,E,F
-	63130-31080		HOSE	ﾎｰｽ	2	C,D
10	63130-31100		HOSE	ﾎｰｽ	2	A,B,E,F
-	63130-31075		HOSE	ﾎｰｽ	2	C,D
11	01184-10025		BOLT & WASHER	ﾎﾞﾙﾄ&ﾜｯｼｬ	2	
12	621F0-12001		STUD	ｽﾀｯﾄﾞ	1	
13	63130-21070		HOSE	ﾎｰｽ	2	
14	04134-00303		NIPPLE	ﾆｯﾌﾟﾙ	2	
15	03320-00140		O-RING	Oﾘﾝｸﾞ	2	
16	01184-10025		BOLT & WASHER	ﾎﾞﾙﾄ&ﾜｯｼｬ	2	

FIG.72 HYDRAULIC LINE (CONNECTOR-CYL. & MOTOR)[4DK]

(A502PR50) ﾊｲﾄﾞﾛﾘｯｸﾗｲﾝ (ｺﾈｸﾀｰｼﾘﾝﾀﾞｰ&ﾓｰﾀ)

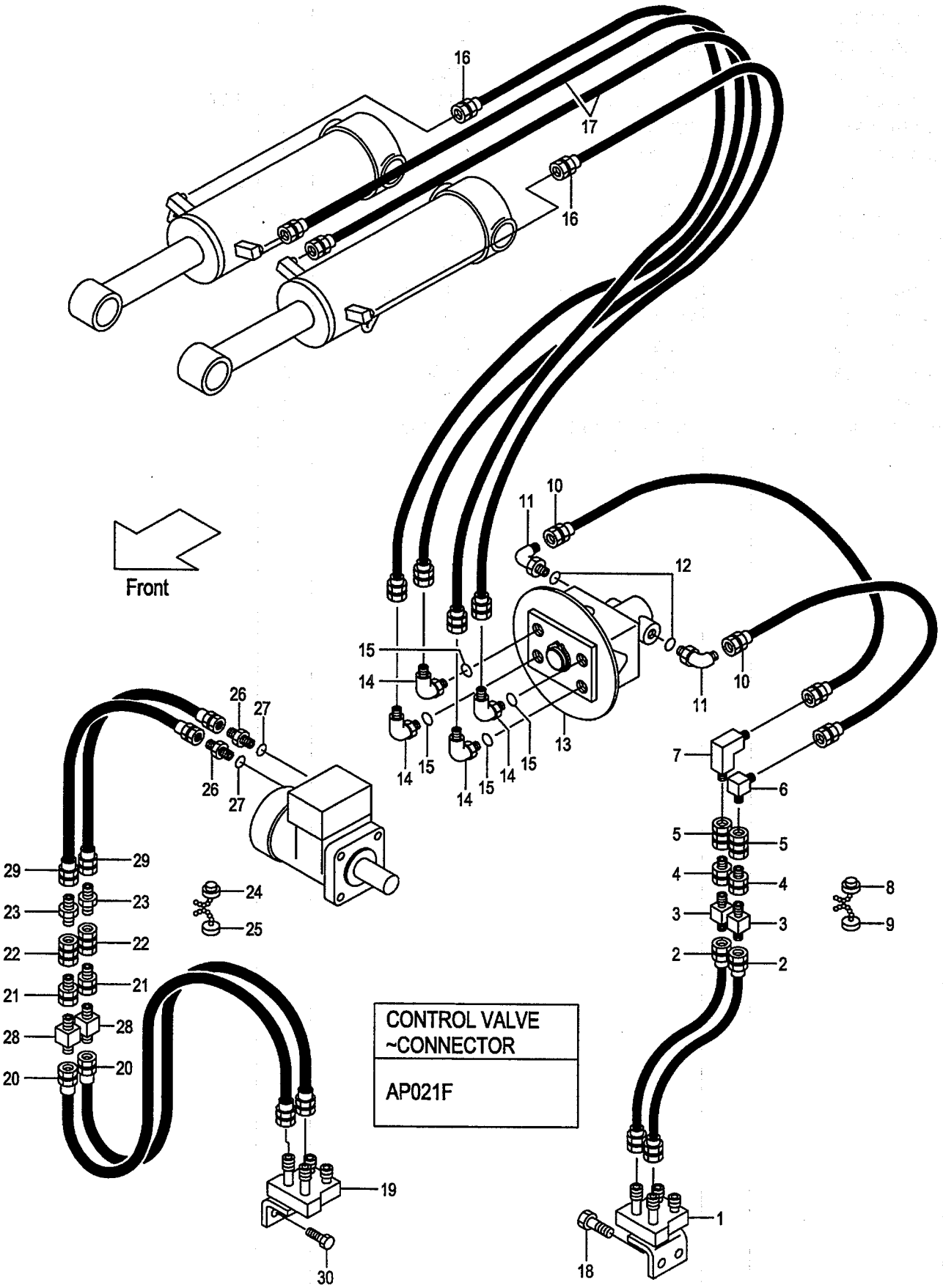

A:PR2A7(J) D:PR2D7(J)
B:PR2B7(J) E:PR2E7(J)
C:PR2C7(J) F:PR2F7(J)

FIG.72
(A502PR50)

Item No	Part No.	Mark	Description		Req'd	Remarks : Serial No.
1	621F0-12011		STUD	ｽﾀｯﾄﾞ	1	[4DK]
2	63130-21030		HOSE	ﾎｰｽ	2	[4DK]
3	63110-18661		STUD	ｽﾀｯﾄﾞ	2	[4DK]
4	04138-00303		UNION	ﾕﾆｵﾝ	2	[4DK]
5	50226-29111		COUPLING	ｶｯﾌﾟﾘﾝｸﾞ	2	[4DK]
6	53110-12121		ELBOW	ｴﾙﾎﾞ	1	[4DK]
7	53110-12131		ELBOW	ｴﾙﾎﾞ	1	[4DK]
8	63130-14061		PLUG	ﾌﾟﾗｸﾞ	2	[4DK]
9	63130-14071		CAP	ｷｬｯﾌﾟ	2	[4DK]
10	63130-21075		HOSE	ﾎｰｽ	2	[4DK]
11	04150-00303		ELBOW	ｴﾙﾎﾞ	2	[4DK]
12	03320-00140		O-RING	Oﾘﾝｸﾞ	2	[4DK]
13	61439-20702		VALVE,ROTARY	ﾊﾞﾙﾌﾞ	1	[4DK]SEE FIG.75
14	63110-12311		ELBOW	ｴﾙﾎﾞ	4	[4DK]
15	03320-00140		O-RING	Oﾘﾝｸﾞ	4	[4DK]
16	63130-31105		HOSE	ﾎｰｽ	2	A,B,E,F [4DK]
-	63130-31080		HOSE	ﾎｰｽ	2	C,D [4DK]
17	63130-31100		HOSE	ﾎｰｽ	2	A,B,E,F [4DK]
-	63130-31075		HOSE	ﾎｰｽ	2	C,D [4DK]
18	01184-10025		BOLT & WASHER	ﾎﾞﾙﾄ&ﾜｯｼｬ	2	[4DK]
19	621F0-12001		STUD	ｽﾀｯﾄﾞ	1	[4DK]
20	63130-21030		HOSE	ﾎｰｽ	2	[4DK]
21	04138-00303		UNION	ﾕﾆｵﾝ	2	[4DK]
22	50226-29111		COUPLING	ｶｯﾌﾟﾘﾝｸﾞ	2	[4DK]
23	04137-00303		NIPPLE	ﾆｯﾌﾟﾙ	2	[4DK]
24	63130-14061		PLUG	ﾌﾟﾗｸﾞ	2	[4DK]
25	63130-14071		PLUG	ﾌﾟﾗｸﾞ	2	[4DK]
26	04134-00303		NIPPLE	ﾆｯﾌﾟﾙ	2	[4DK]
27	03320-00140		O-RING	Oﾘﾝｸﾞ	2	[4DK]
28	63110-18661		STUD	ｽﾀｯﾄﾞ	2	[4DK]
29	62233-45001		HOSE	ﾎｰｽ	2	[4DK]
30	01184-10025		BOLT & WASHER	ﾎﾞﾙﾄ&ﾜｯｼｬ	2	[4DK]

HYDRAULIC LINE
FIG.73 (CONNECTOR-CYL. & MOTOR)[VFM,VFHM]
(A502PR60) ﾊｲﾄﾞﾛﾘｯｸﾗｲﾝ (ｺﾈｸﾀｰｼﾘﾝﾀﾞｰ&ﾓｰﾀ)

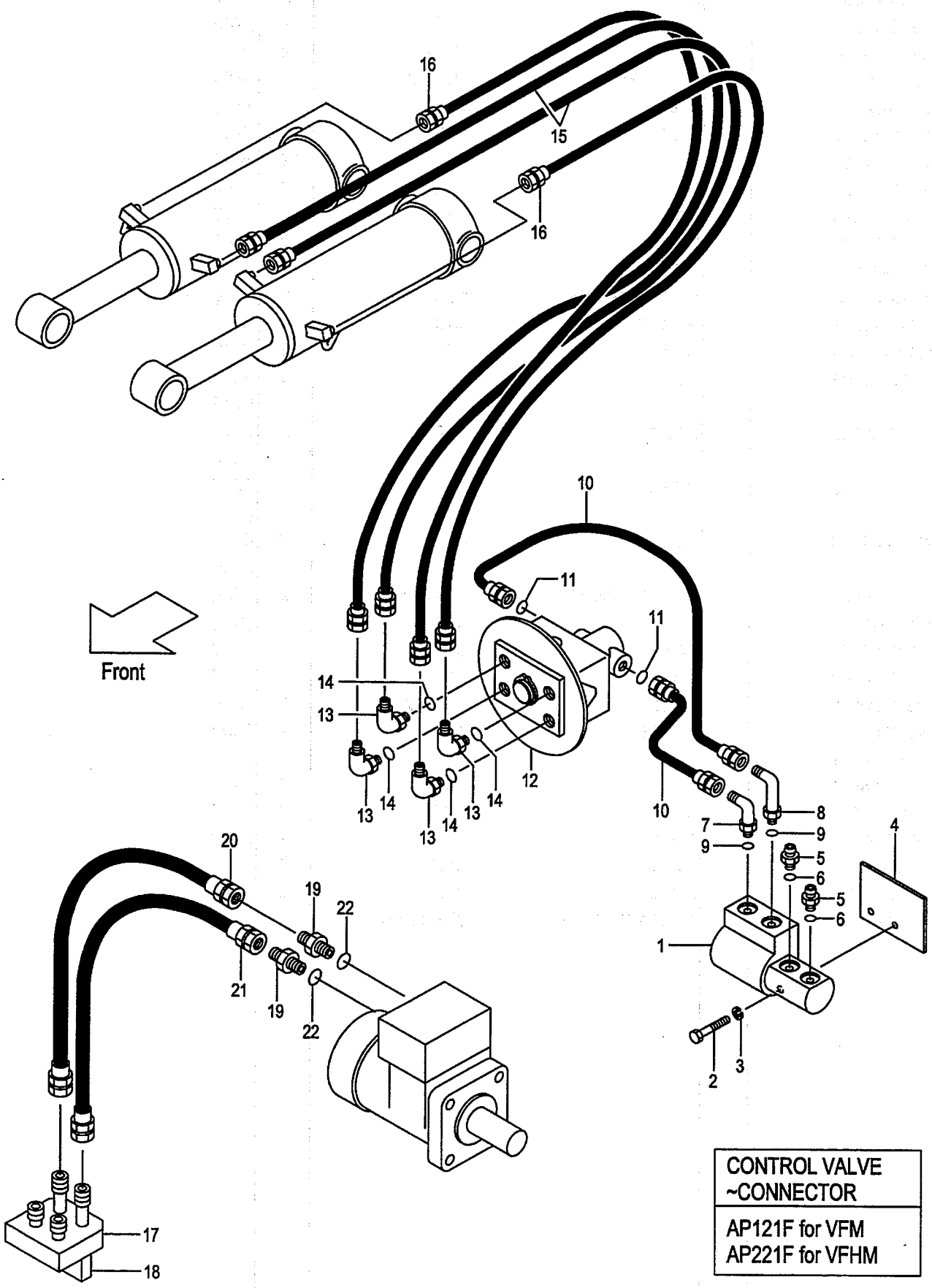

CONTROL VALVE ~CONNECTOR
AP121F for VFM AP221F for VFHM

A:PR2A7(J) D:PR2D7(J)
B:PR2B7(J) E:PR2E7(J)
C:PR2C7(J) F:PR2F7(J)

FIG.73
(A502PR60)

Item No	Part No.	Mark	Description		Req'd	Remarks : Serial No.
1	63130-15083		BLOCK,JUNCTION	ﾌﾞﾛｯｸ	1	SEE FIG.76
2	01100-12035		BOLT	ﾎﾞﾙﾄ	2	
3	02010-00012		WASHER	ﾜｯｼｬ	2	
4	62150-12791		BRACKET	ﾌﾞﾗｹｯﾄ	1	
5	63110-12281		NIPPLE	ﾆｯﾌﾟﾙ	2	
6	03320-00140		O-RING	Oﾘﾝｸﾞ	2	
7	04150-00303		ELBOW	ｴﾙﾎﾞ	1	
8	04150-10303		ELBOW	ｴﾙﾎﾞ	1	
9	03320-00140		O-RING	Oﾘﾝｸﾞ	2	
10	63130-22070		HOSE	ﾎｰｽ	2	
11	03320-00141		O-RING	Oﾘﾝｸﾞ	2	
12	61439-20702		VALVE,ROTARY	ﾊﾞﾙﾌﾞ	1	SEE FIG.75
13	63110-12311		ELBOW	ｴﾙﾎﾞ	4	
14	03320-00140		O-RING	Oﾘﾝｸﾞ	4	
15	63130-31090		HOSE	ﾎｰｽ	2	A,B,E,F
-	63130-31075		HOSE	ﾎｰｽ	2	C,D
16	63130-31085		HOSE	ﾎｰｽ	2	A,B,E,F
-	63130-31080		HOSE	ﾎｰｽ	2	C,D
17	62170-12571		STUD	ｽﾀｯﾄﾞ	1	
18	61150-12511		PLATE	ﾌﾟﾚｰﾄ	1	
19	04134-00303		NIPPLE	ﾆｯﾌﾟﾙ	2	
20	63130-21075		HOSE	ﾎｰｽ	1	
21	63130-21100		HOSE	ﾎｰｽ	1	
22	03320-00140		O-RING	Oﾘﾝｸﾞ	2	

HYDRAULIC LINE
FIG.74 (CONNECTOR-CYL. & MOTOR)[(VFM,VFHM)/4DK]
(A502PR70) ﾊｲﾄﾞﾛﾘｯｸﾗｲﾝ (ｺﾈｸﾀｰｼﾘﾝﾀﾞｰ&ﾓｰﾀ)

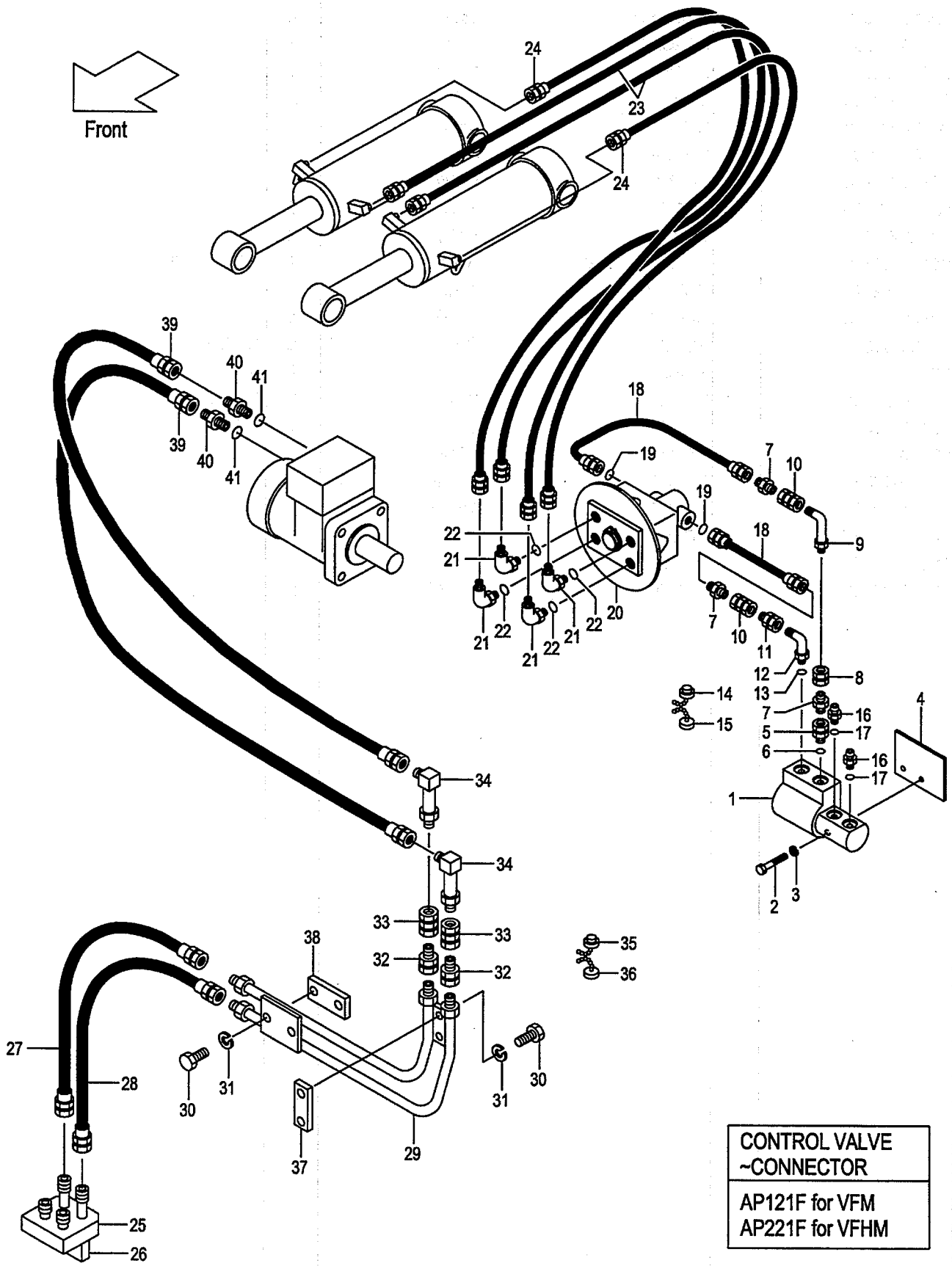

CONTROL VALVE ~CONNECTOR
AP121F for VFM AP221F for VFHM

A:PR2A7(J) D:PR2D7(J)
B:PR2B7(J) E:PR2E7(J)
C:PR2C7(J) F:PR2F7(J)

FIG.74
(A502PR70)

Item No	Part No.	Mark	Description		Req'd	Remarks : Serial No.
1	63130-15083		BLOCK,JUNCTION	ﾌﾞﾛｯｸ	1	[4DK]SEE FIG.76
2	01100-12035		BOLT	ﾎﾞﾙﾄ	2	[4DK]
3	02010-00012		WASHER	ﾜｯｼｬ	2	[4DK]
4	62150-12791		BRACKET	ﾌﾞﾗｹｯﾄ	1	[4DK]
5	04135-00303		UNION	ﾕﾆｵﾝ	1	[4DK]
6	03320-00140		O-RING	Oﾘﾝｸﾞ	1	[4DK]
7	04137-00303		NIPPLE	ﾆｯﾌﾟﾙ	3	[4DK]
8	04139-00303		UNION	ﾕﾆｵﾝ	1	[4DK]
9	53110-12131		ELBOW	ｴﾙﾎﾞ	1	[4DK]
10	50226-29111		COUPLING	ｶｯﾌﾟﾘﾝｸﾞ	2	[4DK]
11	04138-00303		UNION	ﾕﾆｵﾝ	1	[4DK]
12	04150-00303		ELBOW	ｴﾙﾎﾞ	1	[4DK]
13	03320-00140		O-RING	Oﾘﾝｸﾞ	1	[4DK]
14	63130-14061		PLUG	ﾌﾟﾗｸﾞ	2	[4DK]
15	63130-14071		CAP	ｷｬｯﾌﾟ	2	[4DK]
16	63110-12281		NIPPLE	ﾆｯﾌﾟﾙ	2	[4DK]
17	03320-00140		O-RING	Oﾘﾝｸﾞ	2	[4DK]
18	63130-22070		HOSE	ﾎｰｽ	2	[4DK]
19	03320-00141		O-RING	Oﾘﾝｸﾞ	2	[4DK]
20	61439-20702		VALVE,ROTARY	ﾊﾞﾙﾌﾞ	1	[4DK]SEE FIG.75
21	63110-12311		ELBOW	ｴﾙﾎﾞ	4	[4DK]
22	03320-00140		O-RING	Oﾘﾝｸﾞ	4	[4DK]
23	63130-31090		HOSE	ﾎｰｽ	2	A,B,E,F [4DK]
-	63130-31075		HOSE	ﾎｰｽ	2	C,D [4DK]
24	63130-31085		HOSE	ﾎｰｽ	2	A,B,E,F [4DK]
-	63130-31080		HOSE	ﾎｰｽ	2	C,D [4DK]
25	62170-12571		STUD	ｽﾀｯﾄﾞ	1	[4DK]
26	61150-12511		PLATE	ﾌﾟﾚｰﾄ	1	[4DK]
27	63130-21040		HOSE	ﾎｰｽ	1	[VFM/4DK]
-	63130-21035		HOSE	ﾎｰｽ	1	[VFHM/4DK]
28	63130-21050		HOSE	ﾎｰｽ	1	[VFM/4DK]
-	63130-21045		HOSE	ﾎｰｽ	1	[VFHM/4DK]
29	62150-12701		PIPE	ﾊﾟｲﾌﾟ	1	[4DK]
30	01100-08016		BOLT	ﾎﾞﾙﾄ	4	[4DK]
31	02010-00008		WASHER	ﾜｯｼｬ	4	[4DK]
32	04138-00303		UNION	ﾕﾆｵﾝ	2	[4DK]
33	50226-29111		COUPLING	ｶｯﾌﾟﾘﾝｸﾞ	2	[4DK]
34	53110-12131		ELBOW	ｴﾙﾎﾞ	2	[4DK]
35	63130-14061		PLUG	ﾌﾟﾗｸﾞ	2	[4DK]
36	63130-14071		PLUG	ﾌﾟﾗｸﾞ	2	[4DK]
37	62150-12771		BRACKET	ﾌﾞﾗｹｯﾄ	1	[4DK]
38	62150-12781		BRACKET	ﾌﾞﾗｹｯﾄ	1	[4DK]
39	63130-21140		HOSE	ﾎｰｽ	2	[4DK]
40	04134-00303		NIPPLE	ﾆｯﾌﾟﾙ	2	[4DK]
41	03320-00140		O-RING	Oﾘﾝｸﾞ	2	[4DK]
42	62059-12501	+	GUIDE	ｶﾞｲﾄﾞ	2	[4DK]

FIG.75 ROTARY VALVE [PR2A7-PR2F7,PR3A7-PR3F7]

(A502PR80) ﾛｰﾀﾘﾊﾞﾙﾌﾞ

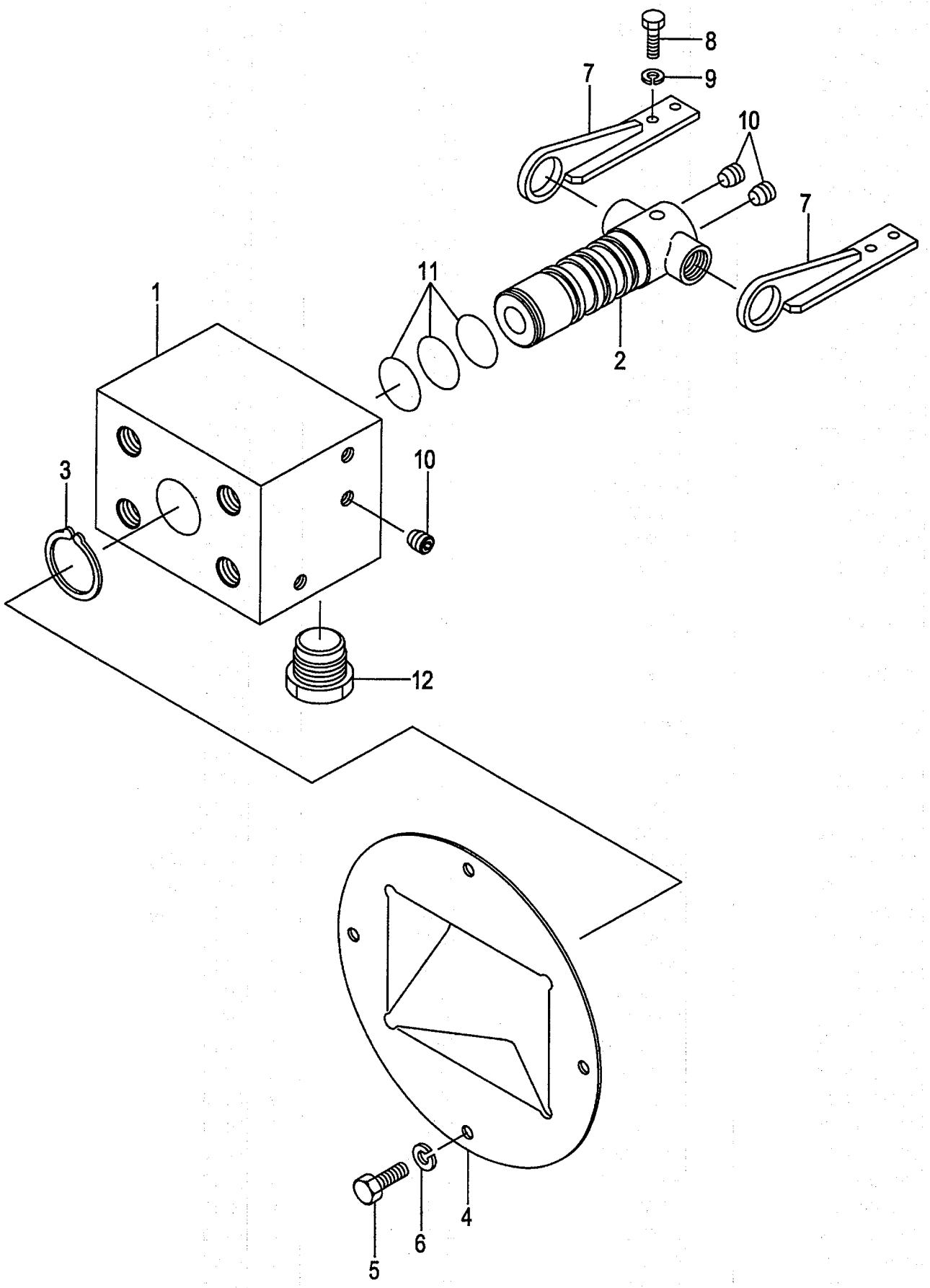

A:PR2A7(J) PR2D7(J) PR3A7(J) PR3D7(J)
PR2B7(J) PR2E7(J) PR3B7(J) PR3E7(J)
PR2C7(J) PR2F7(J) PR3C7(J) PR3F7(J)

FIG.75
(A502PR80)

Item No	Part No.	Mark	Description		Req'd	Remarks : Serial No.
A1	61439-20702		VALVE-ASSY,ROTARY	ﾛｰﾀﾘﾊﾞﾙﾌﾞｱｯｾﾝ	1	INC.1-12
1	61439-22602		BODY	ﾎﾞﾃﾞｨ	1	
2	61439-22612		SPOOL	ｽﾌﾟｰﾙ	1	
3	02100-00036		RING,SNAP	ｽﾅｯﾌﾟﾘﾝｸﾞ	1	
4	61439-22641		RETAINER	ﾘﾃｰﾅ	1	
5	01100-08016		BOLT	ﾎﾞﾙﾄ	4	
6	02010-00008		WASHER	ﾜｯｼｬ	4	
7	61439-22651		BRACKET	ﾌﾞﾗｹｯﾄ	2	
8	01100-10025		BOLT	ﾎﾞﾙﾄ	4	
9	02010-00010		WASHER	ﾜｯｼｬ	4	
10	23870-52871		PLUG	ﾌﾟﾗｸﾞ	9	
11	63130-15321		O-RING	Oﾘﾝｸﾞ	3	
12	62439-22832		VALVE,CHECK	ﾊﾞﾙﾌﾞ	1	
13	62479-25901	+	BRACKET	ﾌﾞﾗｹｯﾄ	1	
14	01100-10025	+	BOLT	ﾎﾞﾙﾄ	4	
15	01100-10040	+	BOLT	ﾎﾞﾙﾄ	4	
16	02010-00010	+	WASHER	ﾜｯｼｬ	8	
17	63110-32301	+	RETAINER	ﾘﾃｰﾅ	1	
18	01100-08016	+	BOLT	ﾎﾞﾙﾄ	4	
19	02010-00008	+	WASHER	ﾜｯｼｬ	4	

FIG.76 JUNCTION BLOCK [VFM,VFHM]

(A502PR90) ｼﾞｬﾝｸｼｮﾝﾌﾞﾛｯｸ

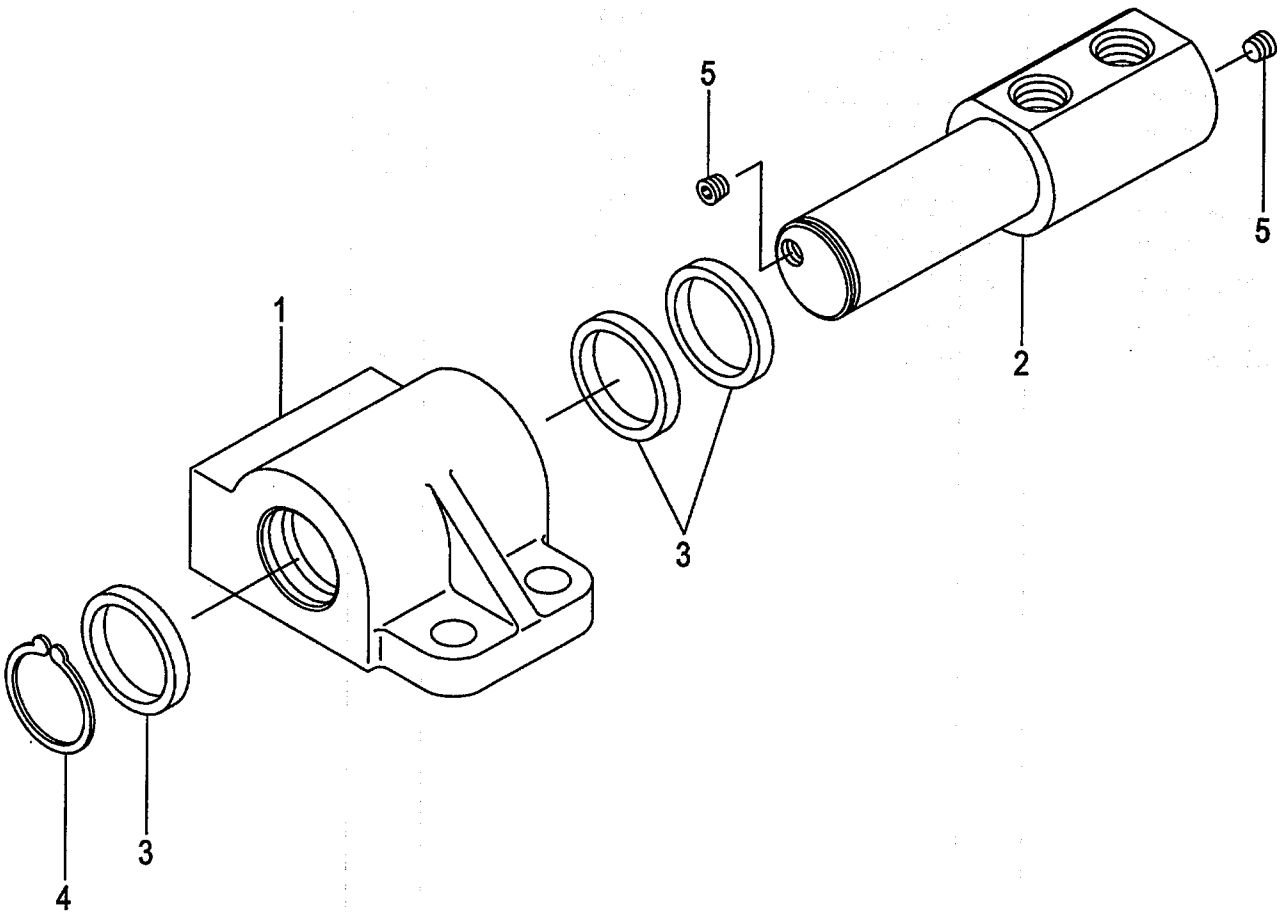

A:PR2A7(J) PR3A7(J)
B:PR2C7(J) PR3C7(J)
C:PR2E7(J) PR3E7(J)

FIG.76
(A502PR90)

Item No	Part No.	Mark	Description		Req'd	Remarks : Serial No.
A1	63130-15083		BLOCK-ASSY,JUNCTION		1	INC.1-5
				ｼﾞｬﾝｸｼｮﾝﾌﾞﾛｯｸｱｯｾﾝ		
1	63110-11521		HOUSING	ﾊｳｼﾞﾝｸﾞ	1	
2	63110-11531		SHAFT	ｼｬﾌﾄ	1	
3	63110-16301		SEAL	ｼｰﾙ	3	
4	02100-00030		RING,SNAP	ｽﾅｯﾌﾟﾘﾝｸﾞ	1	
5	63110-14511		PLUG	ﾌﾟﾗｸﾞ	2	

ROTATING DEVICE

FIG.77 [PR2A7,PR2B7,PR2C7,PR2D7,PR2E7,PR2F7]

(A502PRA0) ﾛｰﾃｰﾃｨﾝｸﾞﾃﾞﾊﾞｲｽ

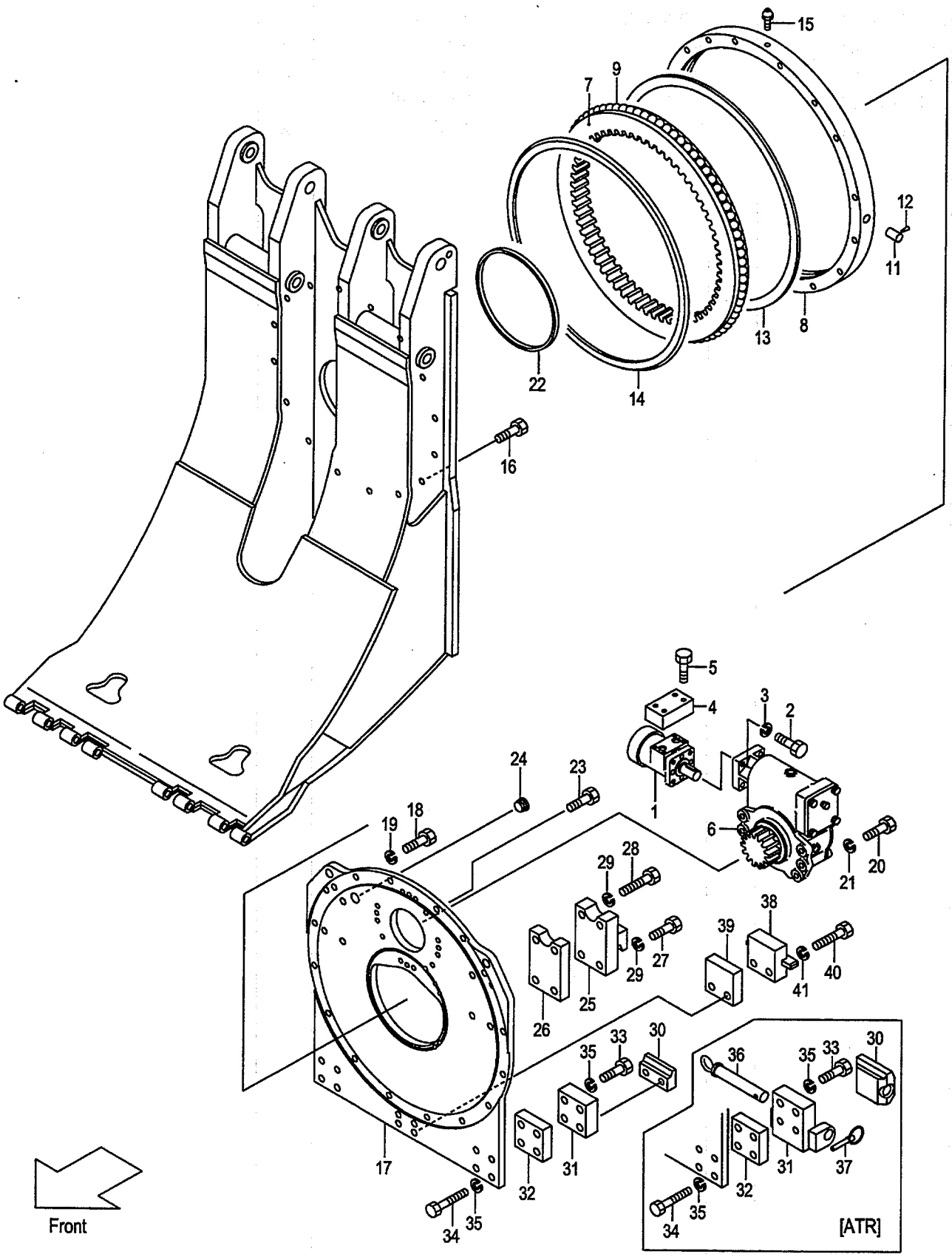

A:PR2A7(J) D:PR2D7(J)
B:PR2B7(J) E:PR2E7(J)
C:PR2C7(J) F:PR2F7(J)

FIG.77
(A502PRA0)

Item No	Part No.	Mark	Description		Req'd	Remarks : Serial No.
1	62059-12801		MOTOR	ﾓｰﾀ	1	SEE FIG.86
2	01110-10025		BOLT	ﾎﾞﾙﾄ	4	
3	02010-00010		WASHER	ﾜｯｼｬ	4	
4	62159-12702		VALVE,COUNTER-BAL.	ﾊﾞﾙﾌﾞ	1	
5	01100-08045		BOLT	ﾎﾞﾙﾄ	4	
A1	62A79-10101		SUB-ASSY,RD		1	INC.6-24
				ﾛｰﾃｰﾃｨﾝｸﾞﾃﾞﾊﾞｲｽｻﾌﾞｱｯｾﾝ		
6	62159-10201		REDUCTION	ﾘﾀﾞｸｼｮﾝ	1	SEE FIG.78
A2	62159-12071		BRG-ASSY,ROTATING		1	INC.7-15
				ﾛｰﾃｰﾃｨﾝｸﾞﾍﾞｱﾘﾝｸﾞｱｯｾﾝ		
7	NO PART NO.		WHEEL,INNER	ﾎｲｰﾙ	1	
8	NO PART NO.		WHEEL,OUTER	ﾎｲｰﾙ	1	
9	03190-00026		BALL	ﾎﾞｰﾙ	77	
10	NO PART NO.	+	SPACER	ｽﾍﾟｰｻ	77	
11	NO PART NO.		CAP	ｷｬｯﾌﾟ	1	
12	NO PART NO.		PIN	ﾋﾟﾝ	1	
13	62159-12261		SEAL	ｼｰﾙ	1	
14	62159-12271		SEAL	ｼｰﾙ	1	
15	04901-00100		FITTING	ﾌｨｯﾃｨﾝｸﾞ	1	
16	01170-14045		BOLT	ﾎﾞﾙﾄ	16	
17	62159-12132		PLATE,BASE	ﾌﾟﾚｰﾄ	1	
18	01103-14045		BOLT	ﾎﾞﾙﾄ	14	
19	02011-00014		WASHER	ﾜｯｼｬ	14	
20	01103-12035		BOLT	ﾎﾞﾙﾄ	6	
21	02011-00012		WASHER	ﾜｯｼｬ	6	
22	62159-12231		FELT	ﾌｪﾙﾄ	1	
23	01170-14030		BOLT	ﾎﾞﾙﾄ	2	
24	25073-00031		PLUG	ﾌﾟﾗｸﾞ	1	
25	62059-12001		GUIDE	ｶﾞｲﾄﾞ	2	
26	62059-12051		SPACER	ｽﾍﾟｰｻ	2	
27	01103-16070		BOLT	ﾎﾞﾙﾄ	4	
28	01103-16085		BOLT	ﾎﾞﾙﾄ	4	
29	02011-00016		WASHER	ﾜｯｼｬ	8	
30	62059-12101		GUIDE	ｶﾞｲﾄﾞ	2	
-	62039-12682		GUIDE	ｶﾞｲﾄﾞ	2	[ATR]
31	62059-12161		SPACER	ｽﾍﾟｰｻ	2	
-	62059-12601		GUIDE	ｶﾞｲﾄﾞ	2	[ATR]
32	62059-12151		SPACER	ｽﾍﾟｰｻ	2	
33	01103-16070		BOLT	ﾎﾞﾙﾄ	4	
34	01103-16120		BOLT	ﾎﾞﾙﾄ	4	
35	02011-00016		WASHER	ﾜｯｼｬ	8	
36	62039-12691		PIN	ﾋﾟﾝ	2	[ATR]
37	62039-12751		PIN	ﾋﾟﾝ	2	[ATR]
38	62059-12201		BLOCK	ﾌﾞﾛｯｸ	1	
39	62059-12211		SPACER	ｽﾍﾟｰｻ	1	
40	01100-16085		BOLT	ﾎﾞﾙﾄ	2	
41	02010-00016		WASHER	ﾜｯｼｬ	2	

FIG.78 REDUCTION [PR2A7-PR2F7,PR3A7-PR3F7]

(A502PRB0) ﾘﾀﾞｸｼｮﾝ

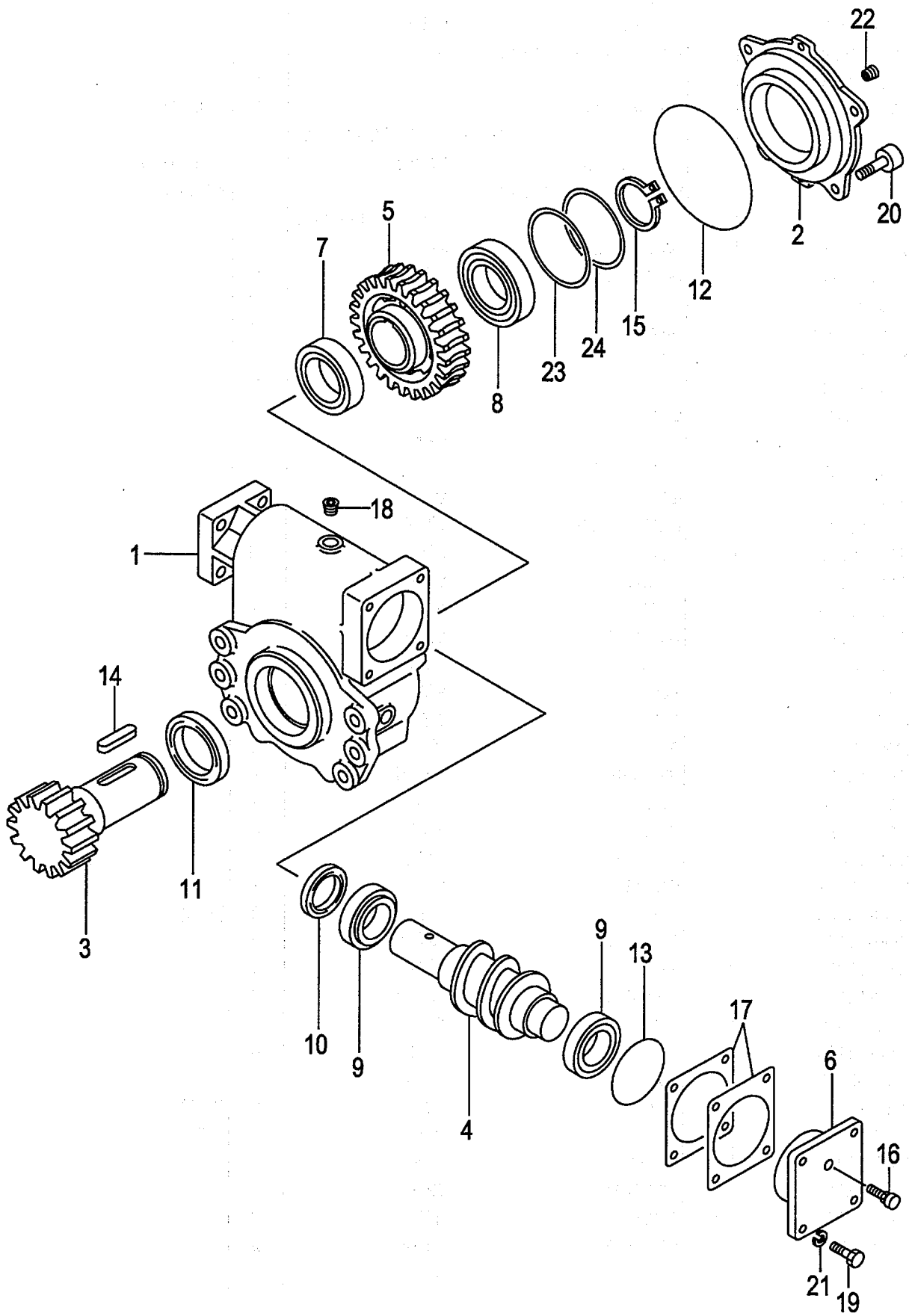

A:PR2A7(J) PR2D7(J) PR3A7(J) PR3D7(J)
PR2B7(J) PR2E7(J) PR3B7(J) PR3E7(J)
PR2C7(J) PR2F7(J) PR3C7(J) PR3F7(J)

FIG.78
(A502PRB0)

Item No	Part No.	Mark	Description		Req'd	Remarks : Serial No.
A1	62159-10201		REDUCTION-ASSY	ﾘﾀﾞｸｼｮﾝｱｯｾﾝ	1	INC.1-25
1	62159-12082		CASE	ｹｰｽ	1	
2	62159-12111		COVER	ｶﾊﾞｰ	1	
3	62159-12061		SHAFT	ｼｬﾌﾄ	1	
4	62159-12021		WORM	ﾜｰﾑ	1	
5	62159-12031		WHEEL,WORM	ﾎｲｰﾙ	1	
6	62159-12101		CAP	ｷｬｯﾌﾟ	1	
7	03006-00210		BRG	ﾍﾞｱﾘﾝｸﾞ	1	
8	03000-06210		BRG	ﾍﾞｱﾘﾝｸﾞ	1	
9	03071-32008		BRG	ﾍﾞｱﾘﾝｸﾞ	2	
10	62159-12221		SEAL,OIL	ｼｰﾙ	1	
11	62159-12231		SEAL,OIL	ｼｰﾙ	1	
12	03310-01400		O-RING	Oﾘﾝｸﾞ	1	
13	03310-00750		O-RING	Oﾘﾝｸﾞ	1	
14	62159-12211		KEY	ｷｰ	2	
15	02100-00050		RING,SNAP	ｽﾅｯﾌﾟﾘﾝｸﾞ	1	
16	90106-65690		BREATHER,AIR	ﾌﾞﾘｰｻﾞ	1	
17	62159-12201		SHIM	ｼﾑ	AR	
18	24329-45541		PLUG	ﾌﾟﾗｸﾞ	4	
19	01106-10025		BOLT	ﾎﾞﾙﾄ	4	
20	62159-12241		BOLT	ﾎﾞﾙﾄ	4	
21	02011-00010		WASHER	ﾜｯｼｬ	4	
22	22518-40151		PLUG	ﾌﾟﾗｸﾞ	1	
23	62159-12551		SHIM	ｼﾑ	AR	
24	62159-12561		SHIM	ｼﾑ	AR	
25	23870-52871	+	PLUG	ﾌﾟﾗｸﾞ	1	

FIG.79 ROTATING CLAMP [PR3A7,PR3C7,PR3E7]

(A502PRC0) ローテーティング゛クランプ゜

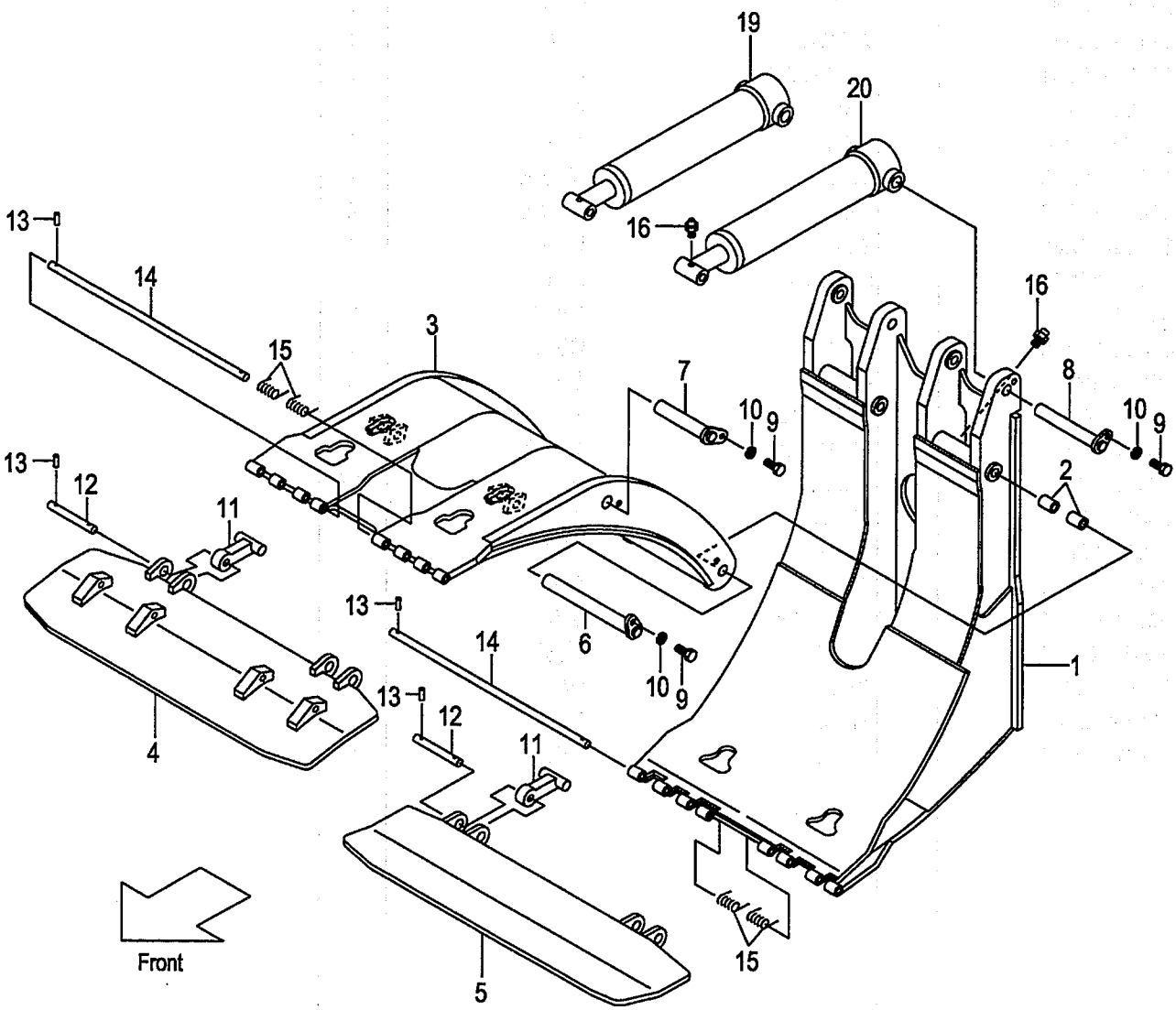

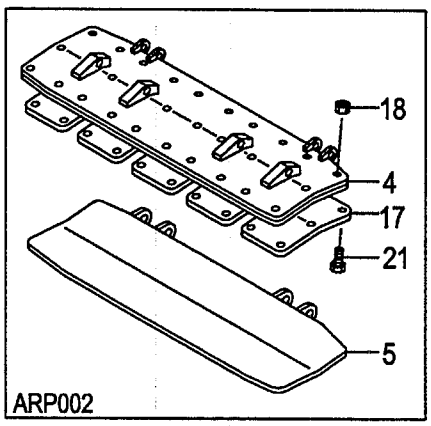

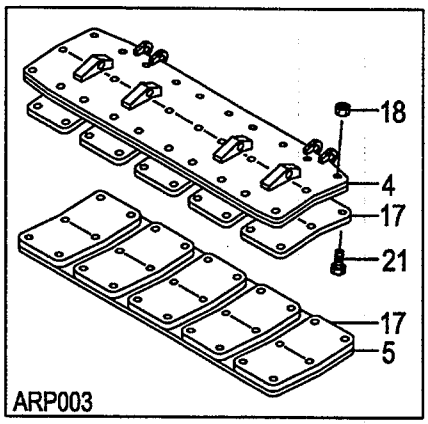

A:PR3A7(J)
B:PR3C7(J)
C:PR3E7(J)

FIG.79
(A502PRC0)

Item No	Part No.	Mark	Description		Req'd	Remarks : Serial No.
A1	62A79-20101		CLAMP-ASSY,ROTATING		1	A
				ﾛｰﾃｰﾃｨﾝｸﾞｸﾗﾝﾌﾟｱｯｾﾝ		INC.1-3,6-16,33,34 & FIG.85
-	62C79-20101		CLAMP-ASSY,ROTATING		1	B
				ﾛｰﾃｰﾃｨﾝｸﾞｸﾗﾝﾌﾟｱｯｾﾝ		INC.1-3,6-16,33,34 & FIG.85
-	62E79-20101		CLAMP-ASSY,ROTATING		1	C
				ﾛｰﾃｰﾃｨﾝｸﾞｸﾗﾝﾌﾟｱｯｾﾝ		INC.1-3,6-16,33,34 & FIG.85
A2	62A79-20202		SUB-ASSY,RC		1	A
				ﾛｰﾃｰﾃｨﾝｸﾞｸﾗﾝﾌﾟｻﾌﾞｱｯｾﾝ		INC.1-3,6-16,33,34
-	62C79-20202		SUB-ASSY,RC		1	B
				ﾛｰﾃｰﾃｨﾝｸﾞｸﾗﾝﾌﾟｻﾌﾞｱｯｾﾝ		INC.1-3,6-16,33,34
-	62E79-20202		SUB-ASSY,RC		1	C
				ﾛｰﾃｰﾃｨﾝｸﾞｸﾗﾝﾌﾟｻﾌﾞｱｯｾﾝ		INC.1-3,6-16,33,34
1	62479-20312		FRAME	ﾌﾚｰﾑ	1	A
-	62479-20302		FRAME	ﾌﾚｰﾑ	1	B
-	62479-20322		FRAME	ﾌﾚｰﾑ	1	C
2	62439-22181		BUSH	ﾌﾞｯｼﾝｸﾞ	4	
3	62479-20471		ARM,LONG	ｱｰﾑ	1	A
-	62479-20461		ARM,LONG	ｱｰﾑ	1	B
-	62479-20481		ARM,LONG	ｱｰﾑ	1	C
4	62479-20611		PAD,UPPER	ﾊﾟｯﾄﾞ	1	
-	62479-20611		PAD,UPPER	ﾊﾟｯﾄﾞ	1	[ARP001]
-	62479-20641		PAD,UPPER	ﾊﾟｯﾄﾞ	1	[ARP002]
-	62479-20641		PAD,UPPER	ﾊﾟｯﾄﾞ	1	[ARP003]
5	62479-20601		PAD,LOWER	ﾊﾟｯﾄﾞ	1	
-	62479-20601		PAD,LOWER	ﾊﾟｯﾄﾞ	1	[ARP001]
-	62479-20601		PAD,LOWER	ﾊﾟｯﾄﾞ	1	[ARP002]
-	62479-20631		PAD,LOWER	ﾊﾟｯﾄﾞ	1	[ARP003]
6	62479-23861		PIN	ﾋﾟﾝ	2	
7	62479-23801		PIN	ﾋﾟﾝ	2	
8	62479-23821		PIN	ﾋﾟﾝ	2	
9	01100-12020		BOLT	ﾎﾞﾙﾄ	6	
10	02010-00012		WASHER	ﾜｯｼｬ	6	
11	62479-23901		STOPPER	ｽﾄｯﾊﾟ	4	
12	62479-24921		SHAFT	ｼｬﾌﾄ	4	
13	02270-04020		PIN	ﾋﾟﾝ	12	
14	62479-24901		SHAFT	ｼｬﾌﾄ	2	
15	62479-24951		SPRING	ｽﾌﾟﾘﾝｸﾞ	4	
16	214A8-52051		FITTING	ﾌｨｯﾃｨﾝｸﾞ	4	
17	62479-24502		RUBBER	ﾗﾊﾞｰ	5	[ARP002]
-	62479-24502		RUBBER	ﾗﾊﾞｰ	10	[ARP003]
18	01400-00010		NUT	ﾅｯﾄ	30	[ARP002]
-	01400-00010		NUT	ﾅｯﾄ	60	[ARP003]
19	62479-20821		CYL,RH	ｼﾘﾝﾀﾞ	1	A
						SEE FIG.70
-	62479-20801		CYL,RH	ｼﾘﾝﾀﾞ	1	B
						SEE FIG.70
-	62479-20841		CYL,RH	ｼﾘﾝﾀﾞ	1	C
						SEE FIG.70
20	62479-20831		CYL,LH	ｼﾘﾝﾀﾞ	1	A
						SEE FIG.70

FIG.79 ROTATING CLAMP [PR3A7,PR3C7,PR3E7]

(A502PRC0) ローテーティング゛クランプ゜

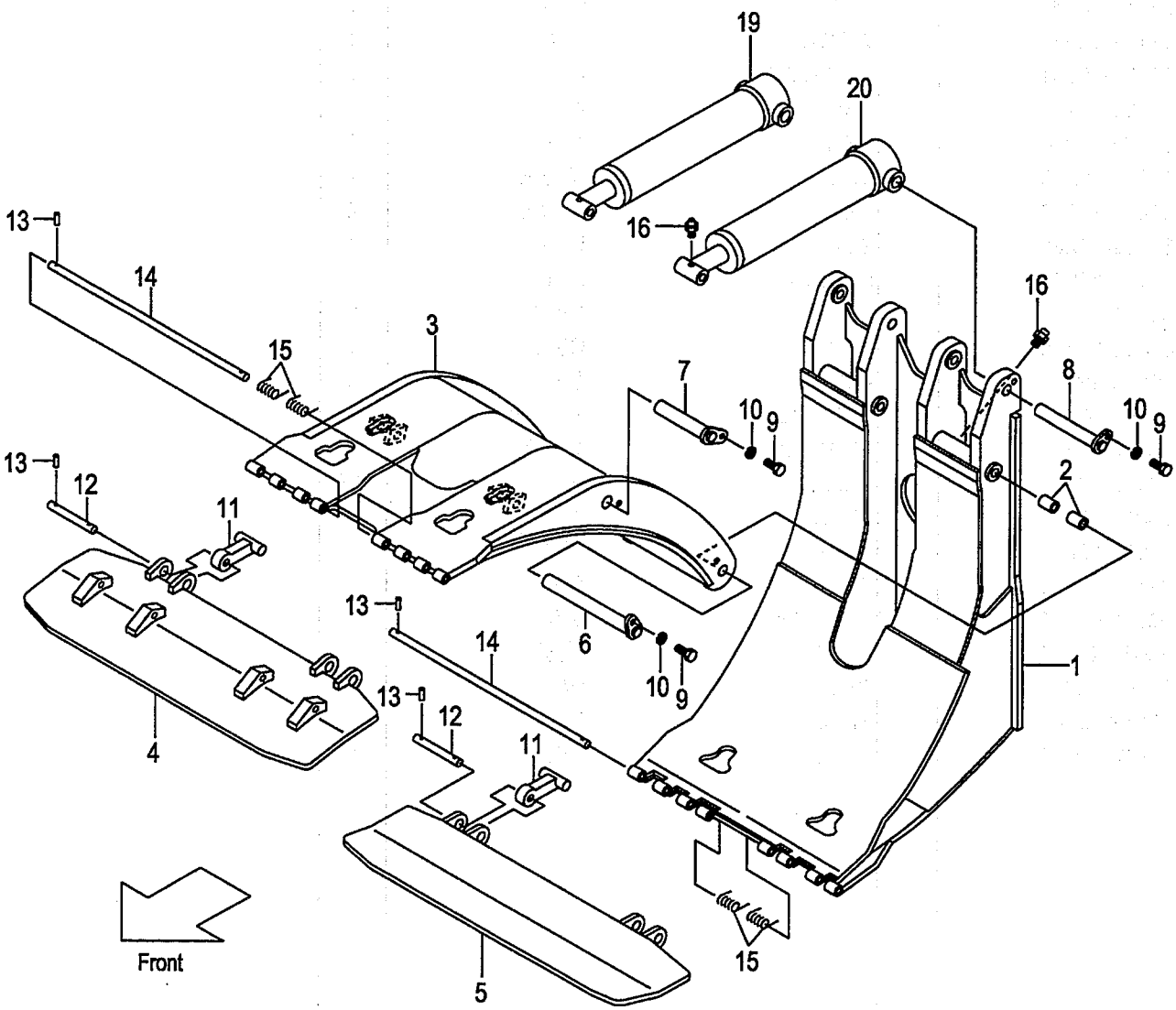

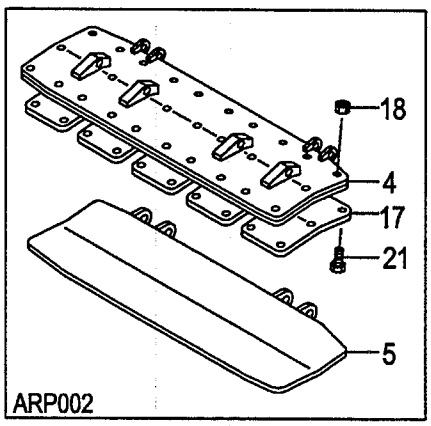

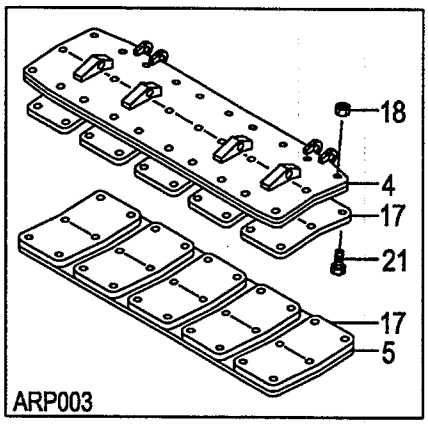

A:PR3A7(J)
B:PR3C7(J)
C:PR3E7(J)

FIG.79
(A502PRC0)

Item No	Part No.	Mark	Description		Req'd	Remarks : Serial No.
-	62479-20811		CYL,LH	ｼﾘﾝﾀﾞ	1	B
						SEE FIG.70
-	62479-20851		CYL,LH	ｼﾘﾝﾀﾞ	1	C
						SEE FIG.70
21	01120-10014		BOLT	ﾎﾞﾙﾄ	30	[ARP002]
-	01120-10014		BOLT	ﾎﾞﾙﾄ	60	[ARP003]
22	63110-18901	+	CHART,LOAD	ﾁｬｰﾄ	1	
-	514A3-82301	+	CHART,LOAD	ﾁｬｰﾄ	1	[EXB/ENGLISH][EXC/ENGLISH]
-	514A3-82301	+	CHART,LOAD	ﾁｬｰﾄ	1	[EXE/ENGLISH][EXN/ENGLISH]
-	63110-18911	+	CHART,LOAD	ﾁｬｰﾄ	1	[EXA/ENGLISH]
-	524T3-84031	+	CHART,LOAD	ﾁｬｰﾄ	1	(RUSSIAN)
-	63110-18921	+	CHART,LOAD	ﾁｬｰﾄ	1	(CHINESE)
-	514A3-82321	+	CHART,LOAD	ﾁｬｰﾄ	1	(GERMAN)
-	514A3-82341	+	CHART,LOAD	ﾁｬｰﾄ	1	(FRENCH)
-	514A3-82331	+	CHART,LOAD	ﾁｬｰﾄ	1	(SPANISH)
-	514A3-82361	+	CHART,LOAD	ﾁｬｰﾄ	1	(DANISH)
-	514A3-82381	+	CHART,LOAD	ﾁｬｰﾄ	1	(GREEK)
-	514A3-82371	+	CHART,LOAD	ﾁｬｰﾄ	1	(ITALIAN)
-	514A3-82351	+	CHART,LOAD	ﾁｬｰﾄ	1	(DUTCH)
-	514A3-82391	+	CHART,LOAD	ﾁｬｰﾄ	1	(PORTUGUESE)
23	02432-01008	+	RIVET	ﾘﾍﾞｯﾄ	4	
24	09210-10300	+	PLATE,NAME	ﾌﾟﾚｰﾄ	1	
-	63110-19201	+	PLATE,NAME	ﾌﾟﾚｰﾄ	1	(ENGLISH)
-	63110-32111	+	PLATE,NAME	ﾌﾟﾚｰﾄ	1	(RUSSIAN)
-	09201-06201	+	PLATE,NAME	ﾌﾟﾚｰﾄ	1	(CHINESE)
-	63110-19221	+	PLATE,NAME	ﾌﾟﾚｰﾄ	1	(GERMAN)
-	63110-19261	+	PLATE,NAME	ﾌﾟﾚｰﾄ	1	(FRENCH)
-	63110-19241	+	PLATE,NAME	ﾌﾟﾚｰﾄ	1	(SPANISH)
-	63110-19301	+	PLATE,NAME	ﾌﾟﾚｰﾄ	1	(DANISH)
-	63110-19341	+	PLATE,NAME	ﾌﾟﾚｰﾄ	1	(GREEK)
-	63110-19321	+	PLATE,NAME	ﾌﾟﾚｰﾄ	1	(ITALIAN)
-	63110-19281	+	PLATE,NAME	ﾌﾟﾚｰﾄ	1	(DUTCH)
-	63110-19361	+	PLATE,NAME	ﾌﾟﾚｰﾄ	1	(PORTUGUESE)
25	63110-18521	+	PLATE,CAUTION	ﾌﾟﾚｰﾄ	1	(ENGLISH)
-	63110-32121	+	PLATE,CAUTION	ﾌﾟﾚｰﾄ	1	(RUSSIAN)
-	63110-18511	+	PLATE,CAUTION	ﾌﾟﾚｰﾄ	1	(CHINESE)
-	63110-19371	+	PLATE,CAUTION	ﾌﾟﾚｰﾄ	1	(GERMAN)
-	63110-19391	+	PLATE,CAUTION	ﾌﾟﾚｰﾄ	1	(FRENCH)
-	63110-19411	+	PLATE,CAUTION	ﾌﾟﾚｰﾄ	1	(SPANISH)
-	63110-19381	+	PLATE,CAUTION	ﾌﾟﾚｰﾄ	1	(DANISH)
-	63110-19441	+	PLATE,CAUTION	ﾌﾟﾚｰﾄ	1	(GREEK)
-	63110-19431	+	PLATE,CAUTION	ﾌﾟﾚｰﾄ	1	(ITALIAN)
-	63110-19401	+	PLATE,CAUTION	ﾌﾟﾚｰﾄ	1	(DUTCH)
-	63110-19421	+	PLATE,CAUTION	ﾌﾟﾚｰﾄ	1	(PORTUGUESE)
26	63110-19151	+	PLATE,CAUTION,SELF	ﾌﾟﾚｰﾄ	1	[4DK]
27	63110-19761	+	KNOB	ﾉﾌﾞ	1	
28	63110-19961	+	DECAL	ﾃﾞｶﾙ	1	
29	63110-19131	+	KNOB	ﾉﾌﾞ	1	

FIG.79 ROTATING CLAMP [PR3A7,PR3C7,PR3E7]

(A502PRC0) ローテーティング゛クランプ゜

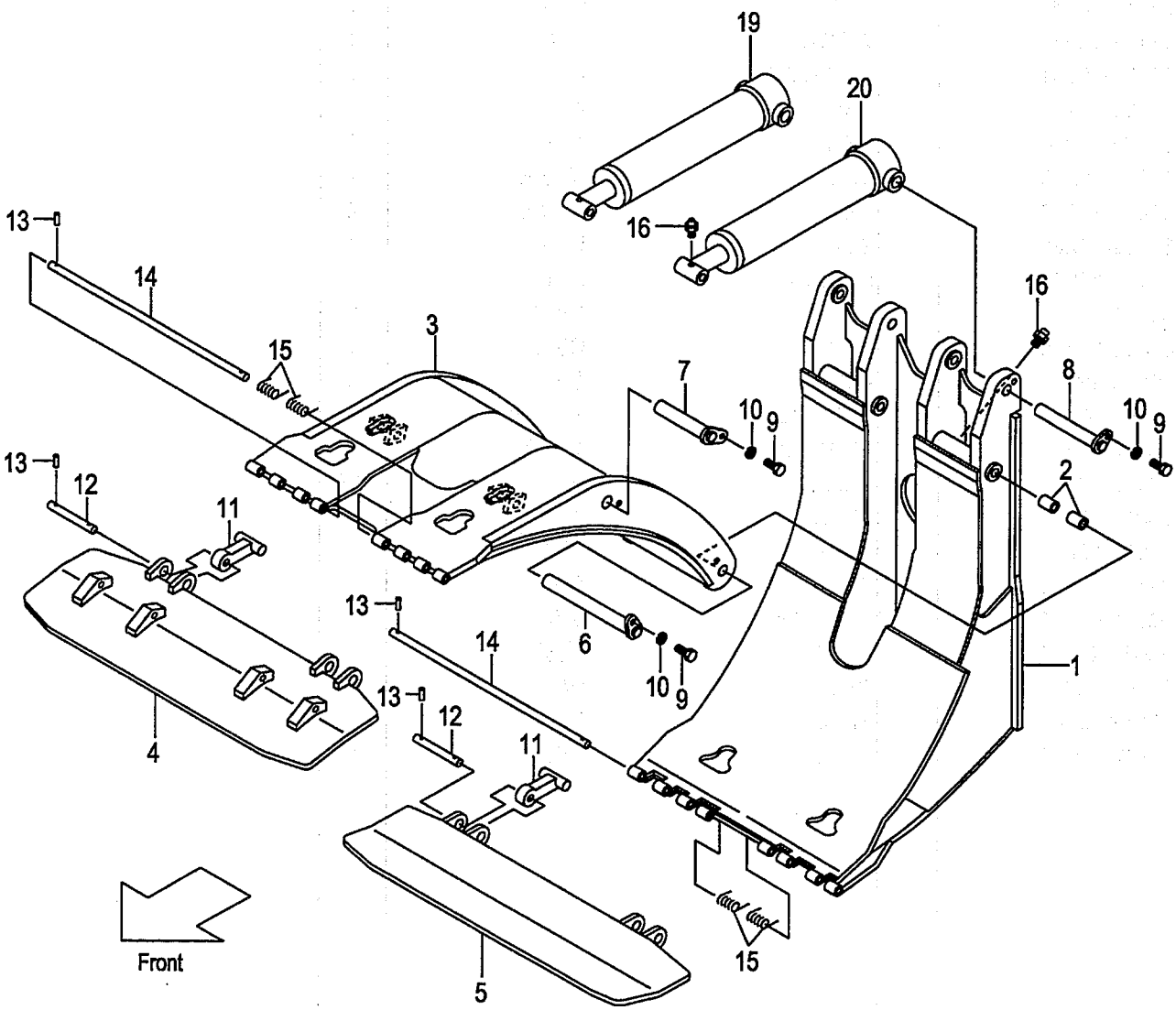

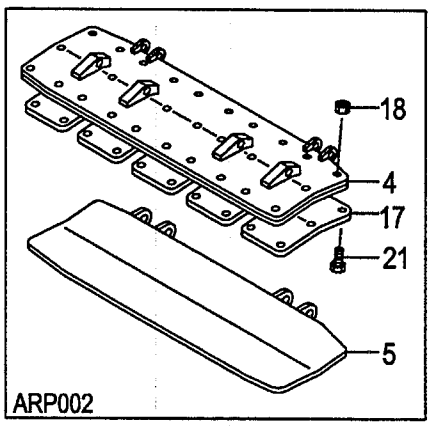

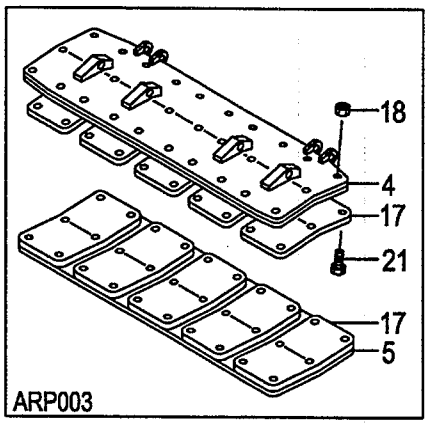

A:PR3A7(J)
B:PR3C7(J)
C:PR3E7(J)

FIG.79
(A502PRC0)

Item No	Part No.	Mark	Description		Req'd	Remarks : Serial No.
30	63110-19691	+	KNOB	ﾉﾌﾞ	1	
31	63110-19891	+	DECAL	ﾃﾞｶﾙ	1	
32	214A7-42181	+	KNOB	ﾉﾌﾞ	1	
33	62479-23591	+	COLLAR	ｶﾗｰ	2	
34	04901-00160	+	NIPPLE	ﾆｯﾌﾟﾙ	2	
35	62479-27001	+	DECAL,CAUTION	ﾃﾞｶﾙ	1	
36	27419-12072	+	DECAL,CAUTION	ﾃﾞｶﾙ	2	

FIG.80 ROTATING CLAMP [PR3B7,PR3D7,PR3F7]

(A502PRD0) ローテーティング゛クランプ゜

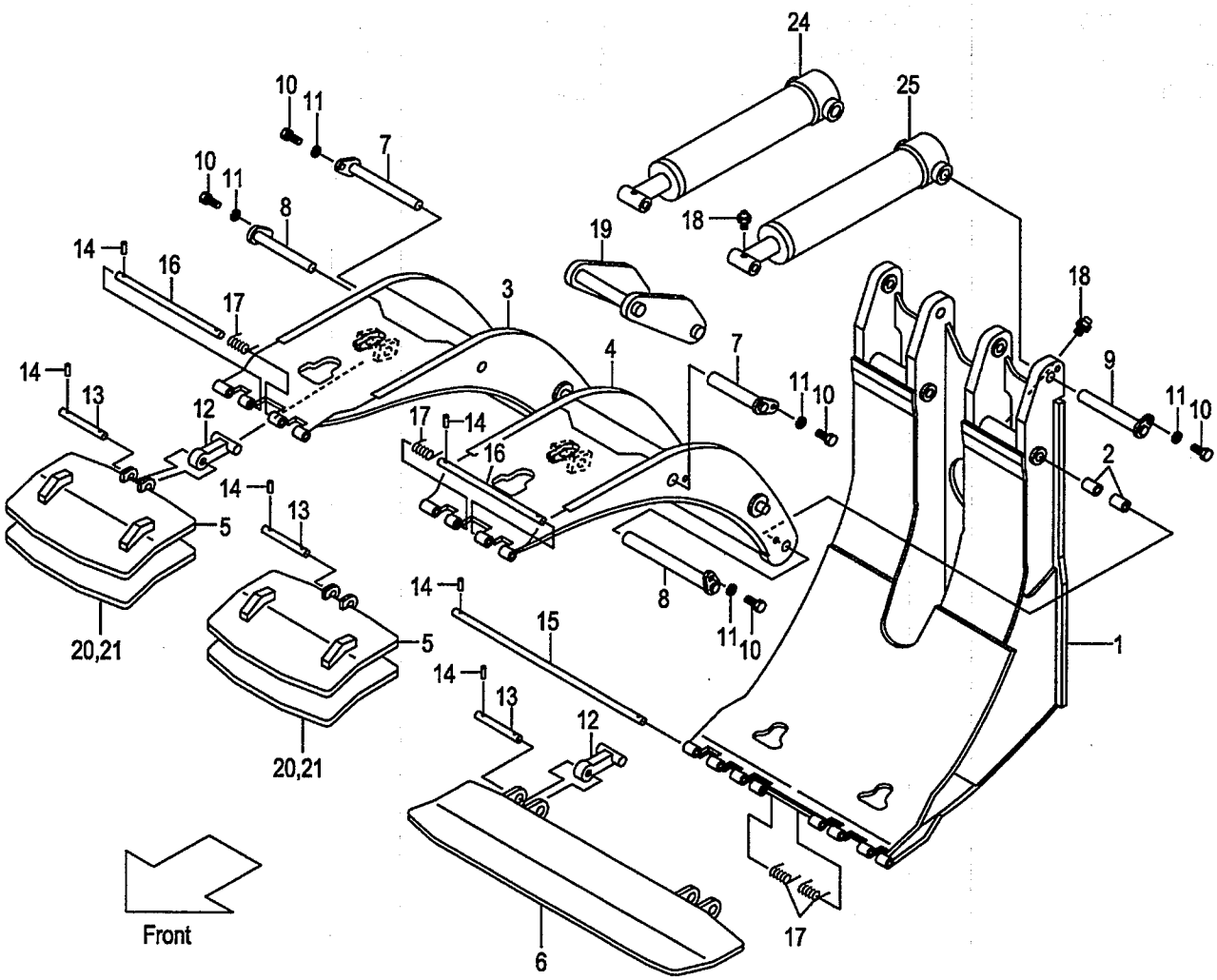

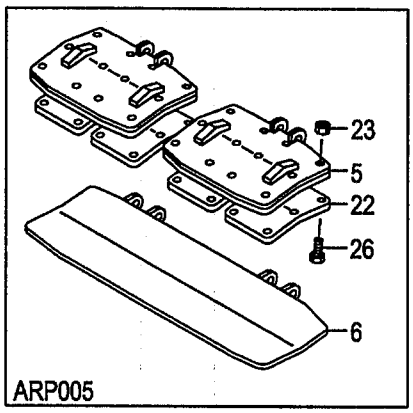

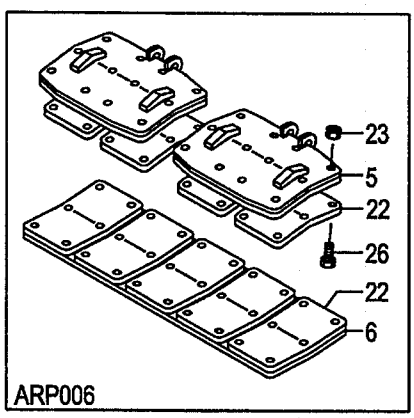

A:PR3B7(J)
B:PR3D7(J)
C:PR3F7(J)

FIG.80
(A502PRD0)

Item No	Part No.	Mark	Description		Req'd	Remarks : Serial No.
A1	62B79-20101		CLAMP-ASSY,ROTATING		1	A
				ﾛｰﾃｰﾃｨﾝｸﾞｸﾗﾝﾌﾟｱｯｾﾝ		INC.1-3,6-21,38,39 & FIG.85
-	62D79-20101		CLAMP-ASSY,ROTATING		1	B
				ﾛｰﾃｰﾃｨﾝｸﾞｸﾗﾝﾌﾟｱｯｾﾝ		INC.1-3,6-21,38,39 & FIG.85
-	62F79-20101		CLAMP-ASSY,ROTATING		1	C
				ﾛｰﾃｰﾃｨﾝｸﾞｸﾗﾝﾌﾟｱｯｾﾝ		INC.1-3,6-21,38,39 & FIG.85
A2	62B79-20202		SUB-ASSY,RC		1	A
				ﾛｰﾃｰﾃｨﾝｸﾞｸﾗﾝﾌﾟｻﾌﾞｱｯｾﾝ		INC.1-3,6-21,38,39
-	62D79-20202		SUB-ASSY,RC		1	B
				ﾛｰﾃｰﾃｨﾝｸﾞｸﾗﾝﾌﾟｻﾌﾞｱｯｾﾝ		INC.1-3,6-21,38,39
-	62F79-20202		SUB-ASSY,RC		1	C
				ﾛｰﾃｰﾃｨﾝｸﾞｸﾗﾝﾌﾟｻﾌﾞｱｯｾﾝ		INC.1-3,6-21,38,39
1	62479-20312		FRAME	ﾌﾚｰﾑ	1	A
-	62479-20302		FRAME	ﾌﾚｰﾑ	1	B
-	62479-20322		FRAME	ﾌﾚｰﾑ	1	C
2	62439-22181		BUSH	ﾌﾞｯｼﾝｸﾞ	4	
3	62479-20421		ARM,LONG,RH	ｱｰﾑ	1	A
-	62479-20401		ARM,LONG,RH	ｱｰﾑ	1	B
-	62479-20441		ARM,LONG,RH	ｱｰﾑ	1	C
4	62479-20431		ARM,LONG,LH	ｱｰﾑ	1	A
-	62479-20411		ARM,LONG,LH	ｱｰﾑ	1	B
-	62479-20451		ARM,LONG,LH	ｱｰﾑ	1	C
5	62479-20621		PAD,UPPER	ﾊﾟｯﾄﾞ	2	
-	62479-20621		PAD,UPPER	ﾊﾟｯﾄﾞ	2	[ARP004]
-	62479-20651		PAD,UPPER	ﾊﾟｯﾄﾞ	2	[ARP005][ARP006]
6	62479-20601		PAD,LOWER	ﾊﾟｯﾄﾞ	1	
-	62479-20601		PAD,LOWER	ﾊﾟｯﾄﾞ	1	[ARP004][ARP005]
-	62479-20631		PAD,LOWER	ﾊﾟｯﾄﾞ	1	[ARP006]
7	62479-23841		PIN	ﾋﾟﾝ	2	
8	62479-23801		PIN	ﾋﾟﾝ	2	
9	62479-23821		PIN	ﾋﾟﾝ	2	
10	01100-12020		BOLT	ﾎﾞﾙﾄ	6	
11	02010-00012		WASHER	ﾜｯｼｬ	6	
12	62479-23901		STOPPER	ｽﾄｯﾊﾟ	4	
13	62479-24921		SHAFT	ｼｬﾌﾄ	4	
14	02270-04020		PIN	ﾋﾟﾝ	14	
15	62479-24901		SHAFT	ｼｬﾌﾄ	1	
16	62479-24911		SHAFT	ｼｬﾌﾄ	2	
17	62479-24951		SPRING	ｽﾌﾟﾘﾝｸﾞ	4	
18	214A8-52051		FITTING	ﾌｨｯﾃｨﾝｸﾞ	4	
19	62479-23701		LINK	ﾘﾝｸ	1	
20	62479-23751		RUBBER	ﾗﾊﾞｰ	2	
21	214A8-42661		BOLT	ﾎﾞﾙﾄ	2	
22	62479-24502		RUBBER	ﾗﾊﾞｰ	4	[ARP005]
-	62479-24502		RUBBER	ﾗﾊﾞｰ	9	[ARP006]
23	01400-00010		NUT	ﾅｯﾄ	24	[ARP005]
-	01400-00010		NUT	ﾅｯﾄ	54	[ARP006]
24	62479-20821		CYL,RH	ｼﾘﾝﾀﾞ	1	A
						SEE FIG.70

FIG.80 ROTATING CLAMP [PR3B7,PR3D7,PR3F7]

(A502PRD0) ローテーティング゛クランプ゜

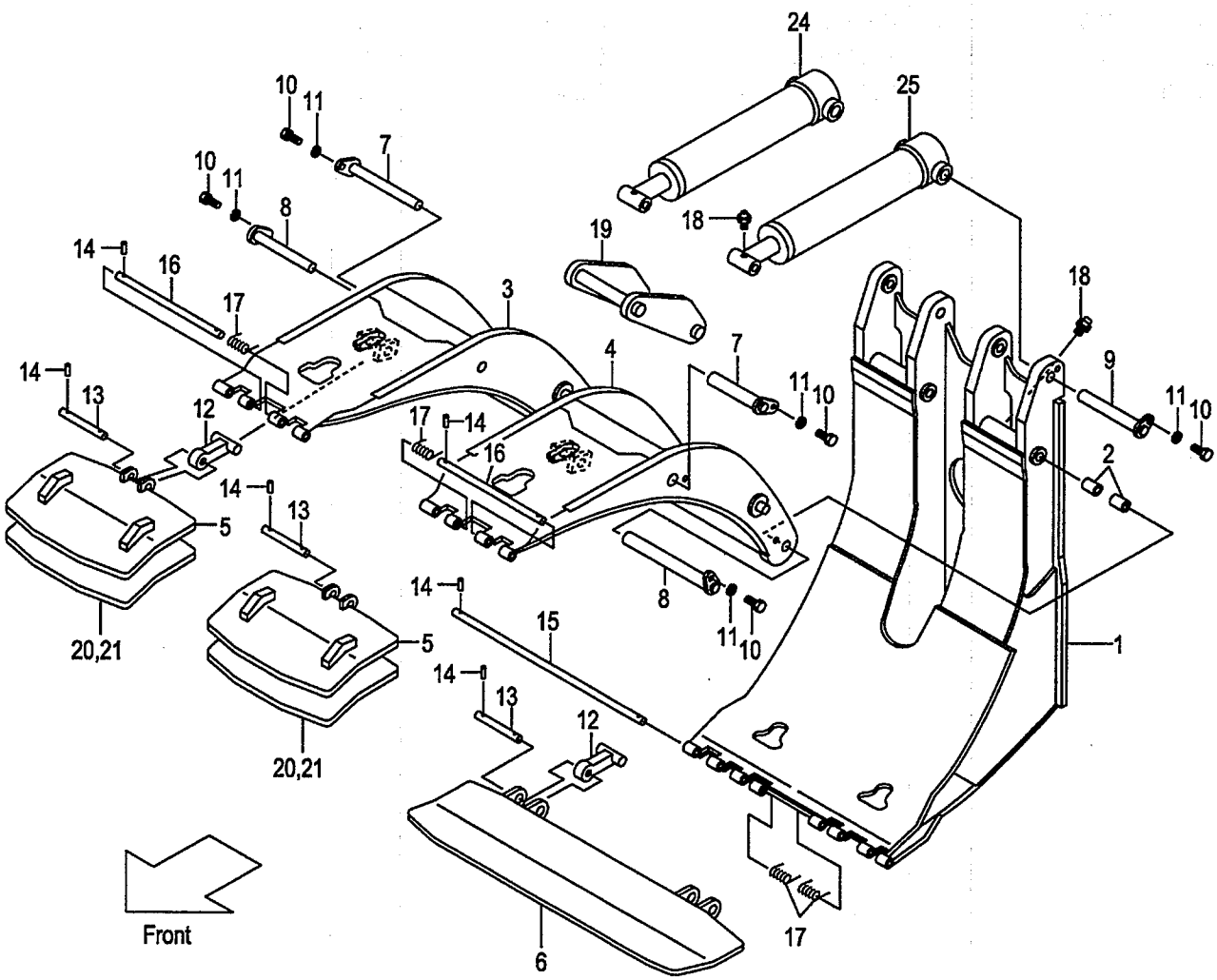

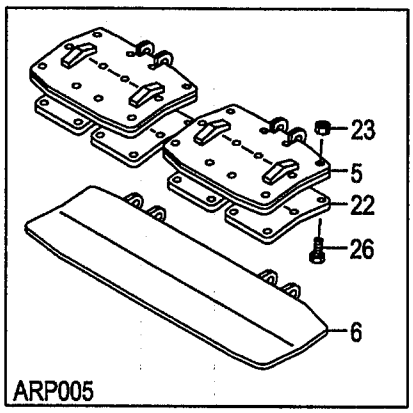

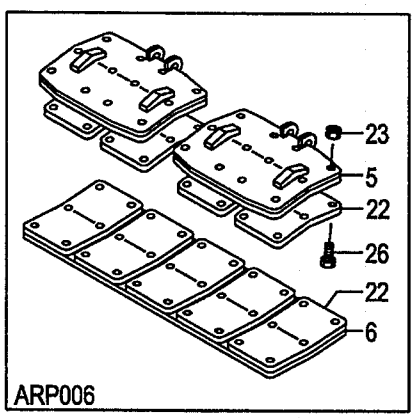

A:PR3B7(J)
B:PR3D7(J)
C:PR3F7(J)

FIG.80
(A502PRD0)

Item No	Part No.	Mark	Description		Req'd	Remarks : Serial No.
-	62479-20801		CYL,RH	ｼﾘﾝﾀﾞ	1	B SEE FIG.70
-	62479-20841		CYL,RH	ｼﾘﾝﾀﾞ	1	C SEE FIG.70
25	62479-20831		CYL,LH	ｼﾘﾝﾀﾞ	1	A SEE FIG.70
-	62479-20811		CYL,LH	ｼﾘﾝﾀﾞ	1	B SEE FIG.70
-	62479-20851		CYL,LH	ｼﾘﾝﾀﾞ	1	C SEE FIG.70
26	01120-10014		BOLT	ﾎﾞﾙﾄ	24	[ARP005]
-	01120-10014		BOLT	ﾎﾞﾙﾄ	54	[ARP006]
27	63110-18901	+	CHART,LOAD	ﾁｬｰﾄ	1	
-	514A3-82301	+	CHART,LOAD	ﾁｬｰﾄ	1	[EXB/ENGLISH][EXC/ENGLISH]
-	514A3-82301	+	CHART,LOAD	ﾁｬｰﾄ	1	[EXE/ENGLISH][EXN/ENGLISH]
-	63110-18911	+	CHART,LOAD	ﾁｬｰﾄ	1	[EXA/ENGLISH]
-	524T3-84031	+	CHART,LOAD	ﾁｬｰﾄ	1	(RUSSIAN)
-	63110-18921	+	CHART,LOAD	ﾁｬｰﾄ	1	(CHINESE)
-	514A3-82321	+	CHART,LOAD	ﾁｬｰﾄ	1	(GERMAN)
-	514A3-82341	+	CHART,LOAD	ﾁｬｰﾄ	1	(FRENCH)
-	514A3-82331	+	CHART,LOAD	ﾁｬｰﾄ	1	(SPANISH)
-	514A3-82361	+	CHART,LOAD	ﾁｬｰﾄ	1	(DANISH)
-	514A3-82381	+	CHART,LOAD	ﾁｬｰﾄ	1	(GREEK)
-	514A3-82371	+	CHART,LOAD	ﾁｬｰﾄ	1	(ITALIAN)
-	514A3-82351	+	CHART,LOAD	ﾁｬｰﾄ	1	(DUTCH)
-	514A3-82391	+	CHART,LOAD	ﾁｬｰﾄ	1	(PORTUGUESE)
28	02432-01008	+	RIVET	ﾘﾍﾞｯﾄ	4	
29	09210-10300	+	PLATE,NAME	ﾌﾟﾚｰﾄ	1	
-	63110-19201	+	PLATE,NAME	ﾌﾟﾚｰﾄ	1	(ENGLISH)
-	63110-32111	+	PLATE,NAME	ﾌﾟﾚｰﾄ	1	(RUSSIAN)
-	09201-06201	+	PLATE,NAME	ﾌﾟﾚｰﾄ	1	(CHINESE)
-	63110-19221	+	PLATE,NAME	ﾌﾟﾚｰﾄ	1	(GERMAN)
-	63110-19261	+	PLATE,NAME	ﾌﾟﾚｰﾄ	1	(FRENCH)
-	63110-19241	+	PLATE,NAME	ﾌﾟﾚｰﾄ	1	(SPANISH)
-	63110-19301	+	PLATE,NAME	ﾌﾟﾚｰﾄ	1	(DANISH)
-	63110-19341	+	PLATE,NAME	ﾌﾟﾚｰﾄ	1	(GREEK)
-	63110-19321	+	PLATE,NAME	ﾌﾟﾚｰﾄ	1	(ITALIAN)
-	63110-19281	+	PLATE,NAME	ﾌﾟﾚｰﾄ	1	(DUTCH)
-	63110-19361	+	PLATE,NAME	ﾌﾟﾚｰﾄ	1	(PORTUGUESE)
30	63110-18521	+	PLATE,CAUTION	ﾌﾟﾚｰﾄ	1	(ENGLISH)
-	63110-32121	+	PLATE,CAUTION	ﾌﾟﾚｰﾄ	1	(RUSSIAN)
-	63110-18511	+	PLATE,CAUTION	ﾌﾟﾚｰﾄ	1	(CHINESE)
-	63110-19371	+	PLATE,CAUTION	ﾌﾟﾚｰﾄ	1	(GERMAN)
-	63110-19391	+	PLATE,CAUTION	ﾌﾟﾚｰﾄ	1	(FRENCH)
-	63110-19411	+	PLATE,CAUTION	ﾌﾟﾚｰﾄ	1	(SPANISH)
-	63110-19381	+	PLATE,CAUTION	ﾌﾟﾚｰﾄ	1	(DANISH)
-	63110-19441	+	PLATE,CAUTION	ﾌﾟﾚｰﾄ	1	(GREEK)
-	63110-19431	+	PLATE,CAUTION	ﾌﾟﾚｰﾄ	1	(ITALIAN)
-	63110-19401	+	PLATE,CAUTION	ﾌﾟﾚｰﾄ	1	(DUTCH)
-	63110-19421	+	PLATE,CAUTION	ﾌﾟﾚｰﾄ	1	(PORTUGUESE)

FIG.80 ROTATING CLAMP [PR3B7,PR3D7,PR3F7]

(A502PRD0) ローテーティング゛クランプ゜

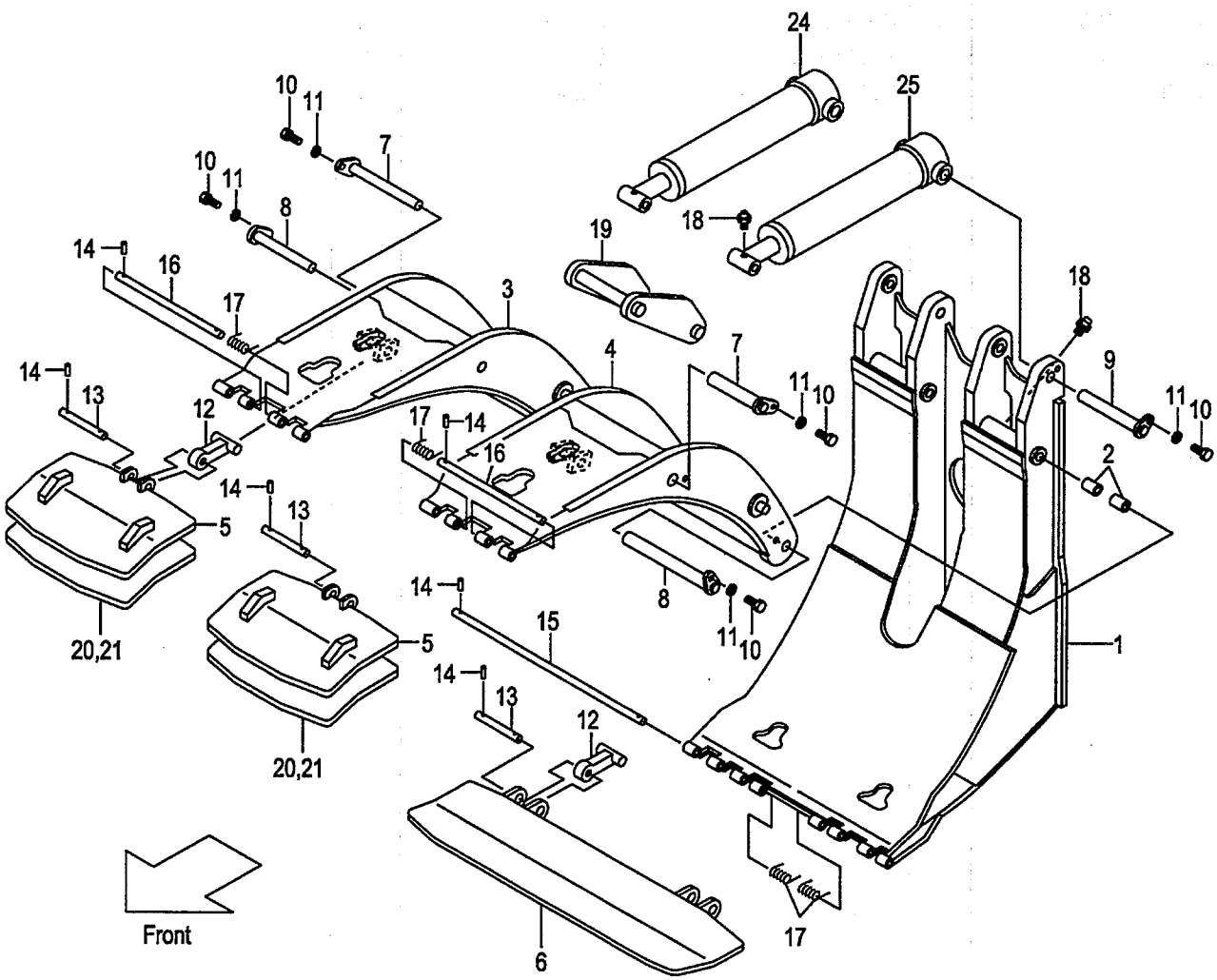

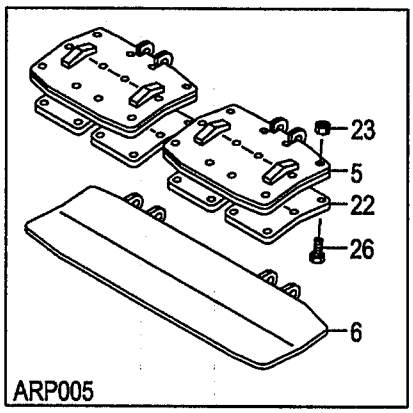

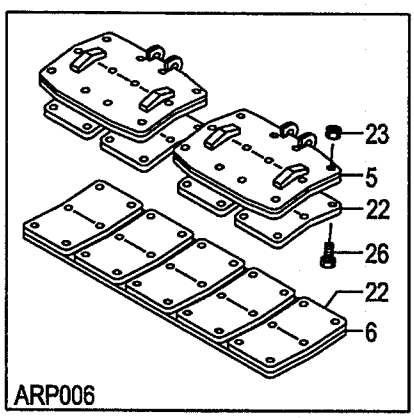

A:PR3B7(J)
B:PR3D7(J)
C:PR3F7(J)

FIG.80
(A502PRD0)

Item No	Part No.	Mark	Description	Req'd	Remarks : Serial No.
31	63110-19151	+	PLATE,CAUTION,SELF プレート	1	[4DK]
32	63110-19761	+	KNOB ノブ	1	
33	63110-19961	+	DECAL デカル	1	
34	63110-19131	+	KNOB ノブ	1	
35	63110-19691	+	KNOB ノブ	1	
36	63110-19891	+	DECAL デカル	1	
37	214A7-42181	+	KNOB ノブ	1	
38	62479-23591	+	COLLAR カラー	2	
39	04901-00160	+	NIPPLE ニップル	2	
40	62479-27001	+	DECAL,CAUTION デカル	1	
41	27419-12072	+	DECAL,CAUTION デカル	2	

FIG.81 HYDRAULIC LINE (CONNECTOR-CYLINDER & MOTOR)

(A502PRE0) ﾊｲﾄﾞﾛﾘｯｸﾗｲﾝ (ｺﾈｸﾀｰｼﾘﾝﾀﾞｰ&ﾓｰﾀ)

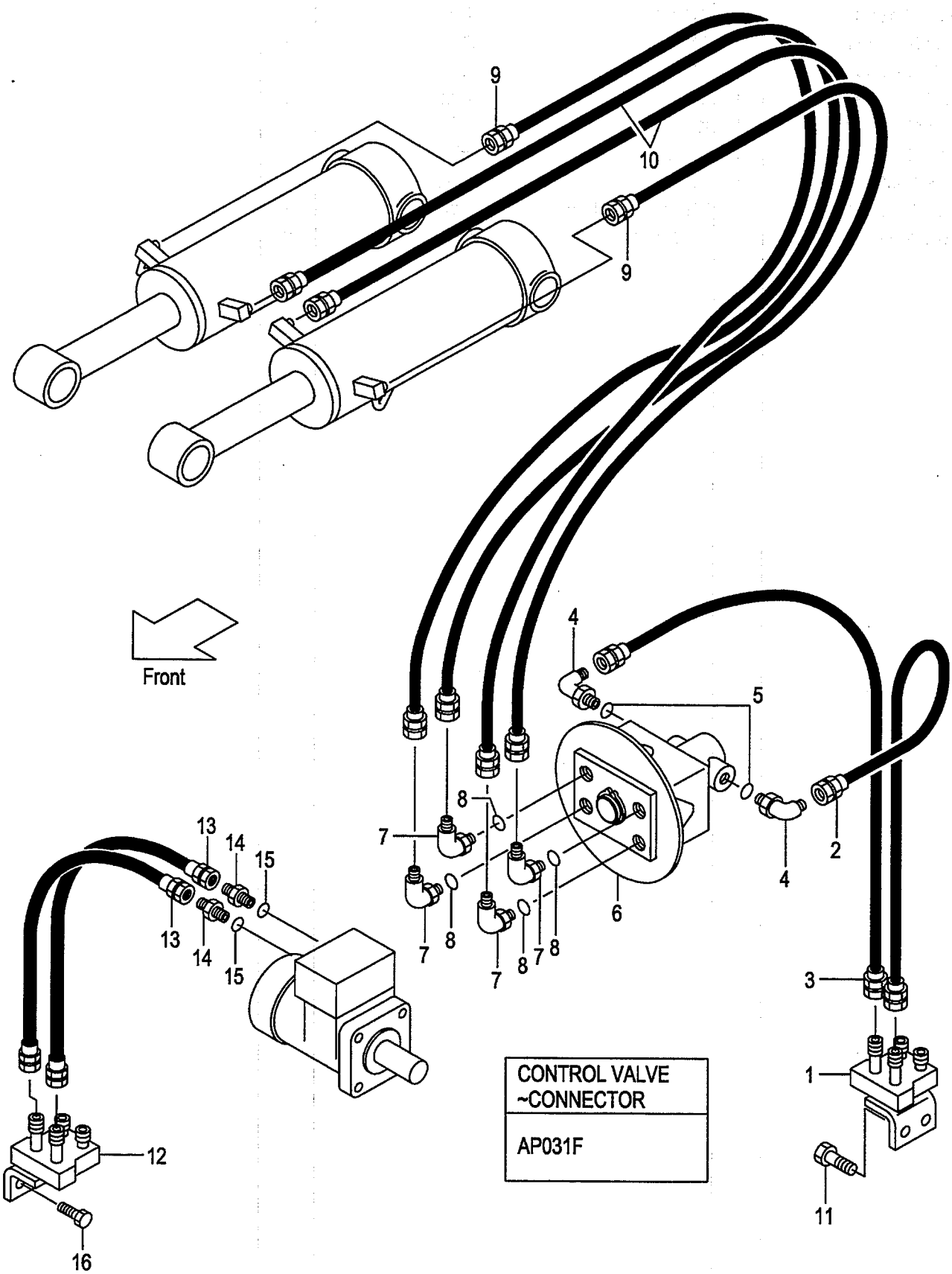

A:PR3A7(J) D:PR3D7(J)
B:PR3B7(J) E:PR3E7(J)
C:PR3C7(J) F:PR3F7(J)

FIG.81
(A502PRE0)

Item No	Part No.	Mark	Description		Req'd	Remarks : Serial No.
1	621F0-12011		STUD	ｽﾀｯﾄﾞ	1	
2	63130-21070		HOSE	ﾎｰｽ	1	
3	63130-21070		HOSE	ﾎｰｽ	1	
4	04150-00303		ELBOW	ｴﾙﾎﾞ	2	
5	03320-00140		O-RING	Oﾘﾝｸﾞ	2	
6	61439-20702		VALVE,ROTARY	ﾊﾞﾙﾌﾞ	1	SEE FIG.75
7	63110-12311		ELBOW	ｴﾙﾎﾞ	4	
8	03320-00140		O-RING	Oﾘﾝｸﾞ	4	
9	63130-31105		HOSE	ﾎｰｽ	2	A,B,E,F
-	63130-31080		HOSE	ﾎｰｽ	2	C,D
10	63130-31100		HOSE	ﾎｰｽ	2	A,B,E,F
-	63130-31075		HOSE	ﾎｰｽ	2	C,D
11	01184-10025		BOLT & WASHER	ﾎﾞﾙﾄ&ﾜｯｼｬ	2	
12	621F0-12001		STUD	ｽﾀｯﾄﾞ	1	
13	63130-21075		HOSE	ﾎｰｽ	2	
14	04134-00303		NIPPLE	ﾆｯﾌﾟﾙ	2	
15	03320-00140		O-RING	Oﾘﾝｸﾞ	2	
16	01184-10025		BOLT & WASHER	ﾎﾞﾙﾄ&ﾜｯｼｬ	2	

FIG.82 HYDRAULIC LINE (CONNECTOR-CYL. & MOTOR)[4DK]

(A502PRF0) ﾊｲﾄﾞﾛﾘｯｸﾗｲﾝ (ｺﾈｸﾀｰｼﾘﾝﾀﾞｰ&ﾓｰﾀ)

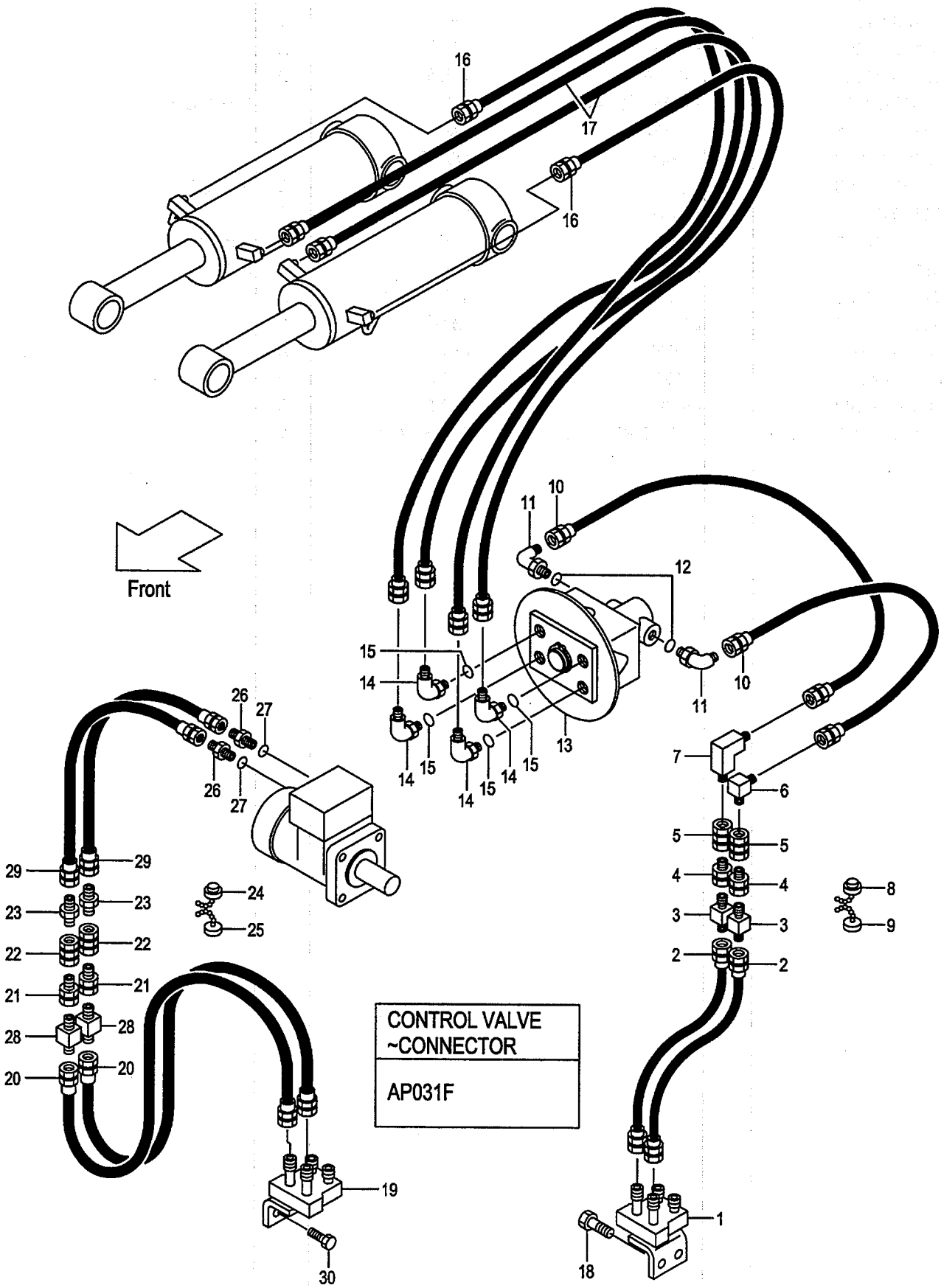

A:PR3A7(J) D:PR3D7(J)
B:PR3B7(J) E:PR3E7(J)
C:PR3C7(J) F:PR3F7(J)

FIG.82
(A502PRF0)

Item No	Part No.	Mark	Description		Req'd	Remarks : Serial No.
1	621F0-12011		STUD	ｽﾀｯﾄﾞ	1	[4DK]
2	63130-21035		HOSE	ﾎｰｽ	2	[4DK]
3	63110-18661		STUD	ｽﾀｯﾄﾞ	2	[4DK]
4	04138-00303		UNION	ﾕﾆｵﾝ	2	[4DK]
5	50226-29111		COUPLING	ｶｯﾌﾟﾘﾝｸﾞ	2	[4DK]
6	53110-12121		ELBOW	ｴﾙﾎﾞ	1	[4DK]
7	53110-12131		ELBOW	ｴﾙﾎﾞ	1	[4DK]
8	63130-14061		PLUG	ﾌﾟﾗｸﾞ	2	[4DK]
9	63130-14071		CAP	ｷｬｯﾌﾟ	2	[4DK]
10	63130-21075		HOSE	ﾎｰｽ	2	[4DK]
11	04150-00303		ELBOW	ｴﾙﾎﾞ	2	[4DK]
12	03320-00140		O-RING	Oﾘﾝｸﾞ	2	[4DK]
13	61439-20702		VALVE,ROTARY	ﾊﾞﾙﾌﾞ	1	[4DK]SEE FIG.75
14	63110-12311		ELBOW	ｴﾙﾎﾞ	4	[4DK]
15	03320-00140		O-RING	Oﾘﾝｸﾞ	4	[4DK]
16	63130-31105		HOSE	ﾎｰｽ	2	A,B,E,F [4DK]
-	63130-31080		HOSE	ﾎｰｽ	2	C,D [4DK]
17	63130-31100		HOSE	ﾎｰｽ	2	A,B,E,F [4DK]
-	63130-31075		HOSE	ﾎｰｽ	2	C,D [4DK]
18	01184-10025		BOLT & WASHER	ﾎﾞﾙﾄ&ﾜｯｼｬ	2	[4DK]
19	621F0-12001		STUD	ｽﾀｯﾄﾞ	1	[4DK]
20	63130-21035		HOSE	ﾎｰｽ	2	[4DK]
21	04138-00303		UNION	ﾕﾆｵﾝ	2	[4DK]
22	50226-29111		COUPLING	ｶｯﾌﾟﾘﾝｸﾞ	2	[4DK]
23	04137-00303		NIPPLE	ﾆｯﾌﾟﾙ	2	[4DK]
24	63130-14061		PLUG	ﾌﾟﾗｸﾞ	2	[4DK]
25	63130-14071		PLUG	ﾌﾟﾗｸﾞ	2	[4DK]
26	04134-00303		NIPPLE	ﾆｯﾌﾟﾙ	2	[4DK]
27	03320-00140		O-RING	Oﾘﾝｸﾞ	2	[4DK]
28	63110-18661		STUD	ｽﾀｯﾄﾞ	2	[4DK]
29	62233-45001		HOSE	ﾎｰｽ	2	[4DK]
30	01184-10025		BOLT & WASHER	ﾎﾞﾙﾄ&ﾜｯｼｬ	2	[4DK]

HYDRAULIC LINE
FIG.83 (CONNECTOR-CYL. & MOTOR)[VFM,VFHM]
(A502PRG0) ﾊｲﾄﾞﾛﾘｯｸﾗｲﾝ (ｺﾈｸﾀｰｼﾘﾝﾀﾞｰ&ﾓｰﾀ)

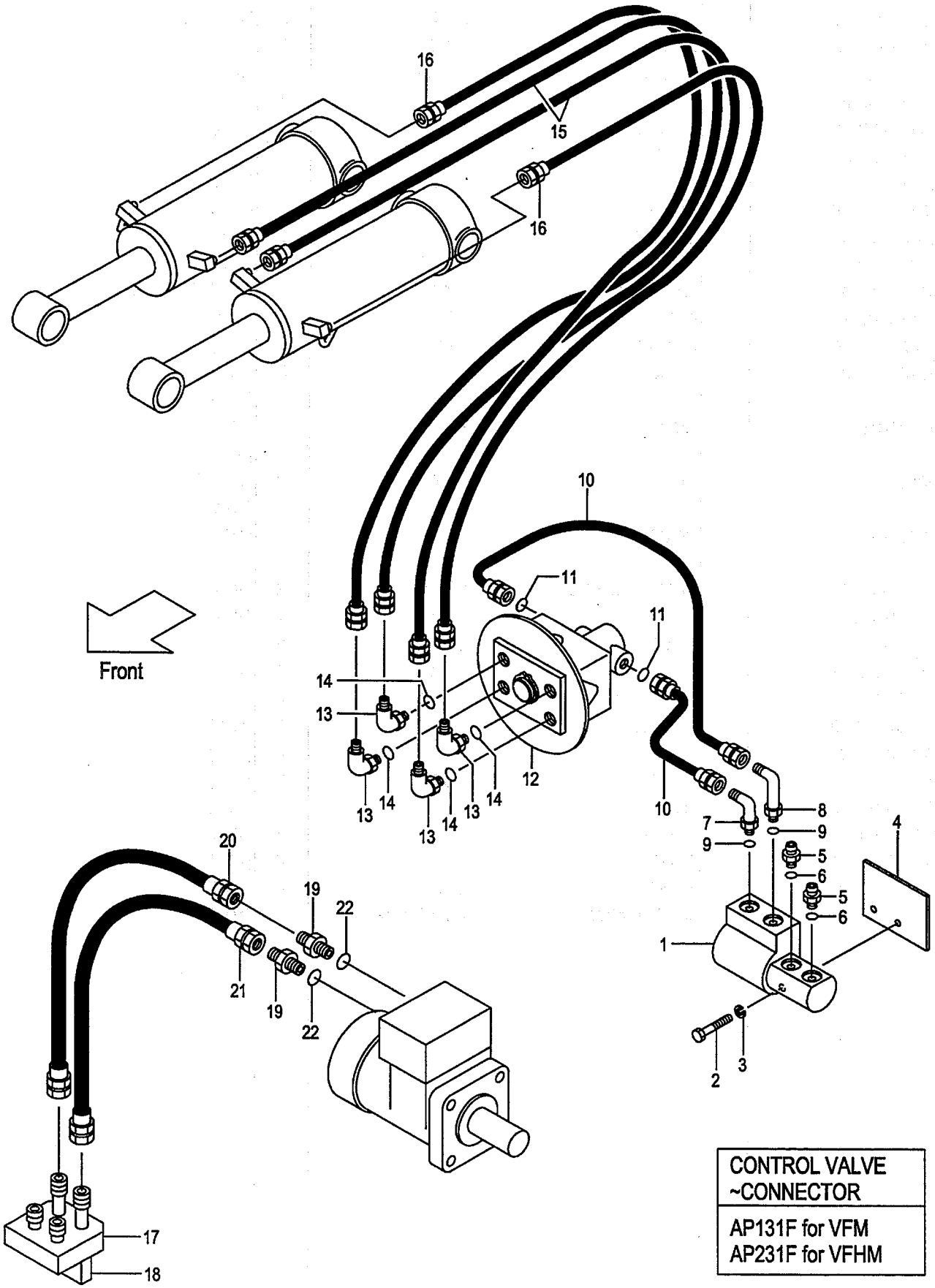

CONTROL VALVE ~CONNECTOR
AP131F for VFM AP231F for VFHM

A:PR3A7(J) D:PR3D7(J)
B:PR3B7(J) E:PR3E7(J)
C:PR3C7(J) F:PR3F7(J)

FIG.83
(A502PRG0)

Item No	Part No.	Mark	Description		Req'd	Remarks : Serial No.
1	63130-15083		BLOCK,JUNCTION	ﾌﾞﾛｯｸ	1	SEE FIG.76
2	01100-12035		BOLT	ﾎﾞﾙﾄ	2	
3	02010-00012		WASHER	ﾜｯｼｬ	2	
4	62150-12791		BRACKET	ﾌﾞﾗｹｯﾄ	1	
5	63110-12281		NIPPLE	ﾆｯﾌﾟﾙ	2	
6	03320-00140		O-RING	Oﾘﾝｸﾞ	2	
7	04150-00303		ELBOW	ｴﾙﾎﾞ	1	
8	04150-10303		ELBOW	ｴﾙﾎﾞ	1	
9	03320-00140		O-RING	Oﾘﾝｸﾞ	2	
10	63130-22070		HOSE	ﾎｰｽ	2	
11	03320-00141		O-RING	Oﾘﾝｸﾞ	2	
12	61439-20702		VALVE,ROTARY	ﾊﾞﾙﾌﾞ	1	SEE FIG.75
13	63110-12311		ELBOW	ｴﾙﾎﾞ	4	
14	03320-00140		O-RING	Oﾘﾝｸﾞ	4	
15	63130-31090		HOSE	ﾎｰｽ	2	A,B,E,F
-	63130-31075		HOSE	ﾎｰｽ	2	C,D
16	63130-31085		HOSE	ﾎｰｽ	2	A,B,E,F
-	63130-31080		HOSE	ﾎｰｽ	2	C,D
17	62170-12571		STUD	ｽﾀｯﾄﾞ	1	
18	61150-12511		PLATE	ﾌﾟﾚｰﾄ	1	
19	04134-00303		NIPPLE	ﾆｯﾌﾟﾙ	2	
20	63130-21075		HOSE	ﾎｰｽ	1	
21	63130-21100		HOSE	ﾎｰｽ	1	
22	03320-00140		O-RING	Oﾘﾝｸﾞ	2	

HYDRAULIC LINE
FIG.84 (CONNECTOR-CYL. & MOTOR)[(VFM,VFHM)/4DK]
(A502PRH0) ﾊｲﾄﾞﾛﾘｯｸﾗｲﾝ (ｺﾈｸﾀｰｼﾘﾝﾀﾞｰ&ﾓｰﾀ)

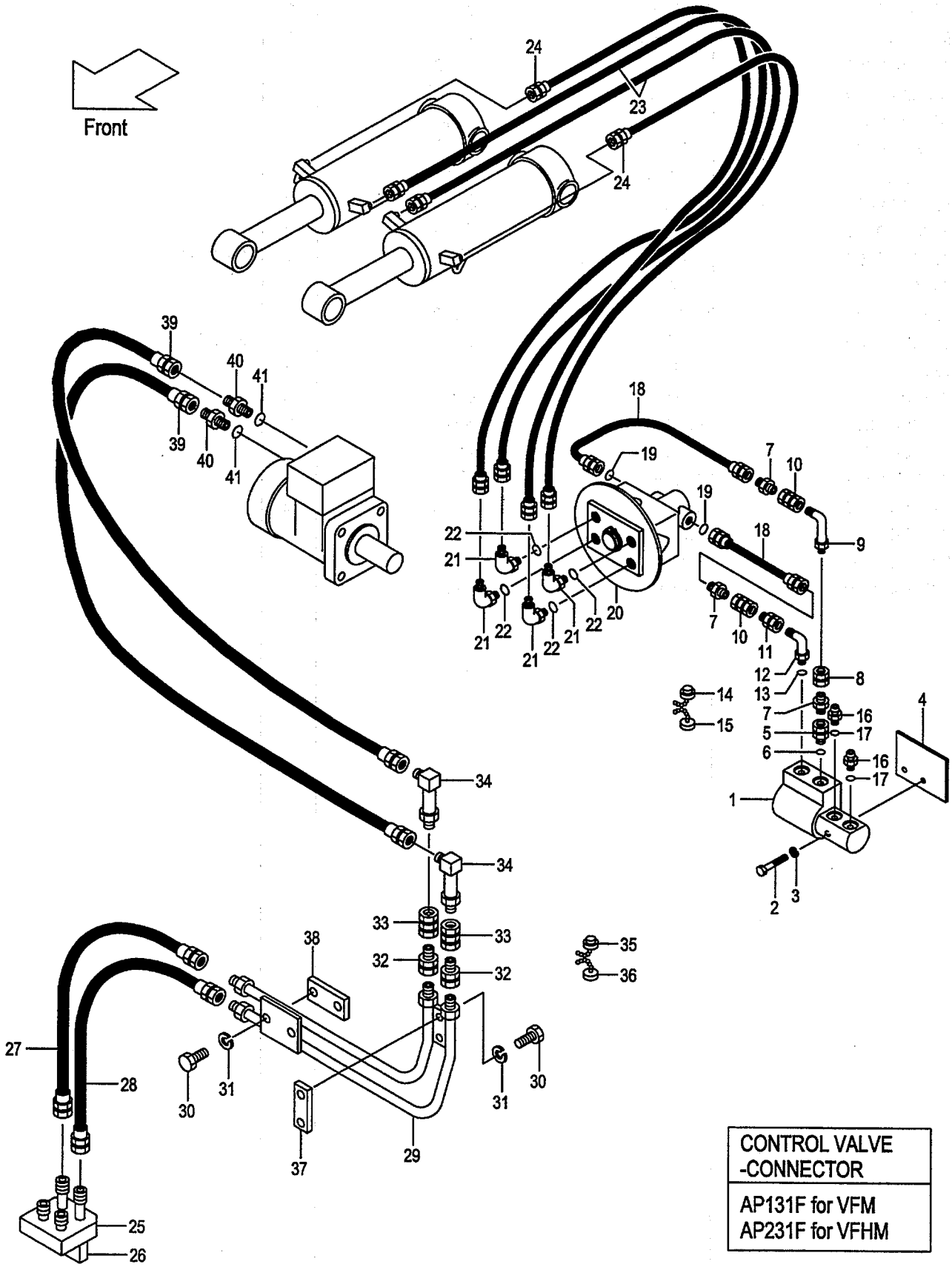

CONTROL VALVE -CONNECTOR
AP131F for VFM AP231F for VFHM

A:PR3A7(J) D:PR3D7(J)
B:PR3B7(J) E:PR3E7(J)
C:PR3C7(J) F:PR3F7(J)

FIG.84
(A502PRH0)

Item No	Part No.	Mark	Description		Req'd	Remarks : Serial No.
1	63130-15083		BLOCK,JUNCTION	ﾌﾞﾛｯｸ	1	[4DK]SEE FIG.76
2	01100-12035		BOLT	ﾎﾞﾙﾄ	2	[4DK]
3	02010-00012		WASHER	ﾜｯｼｬ	2	[4DK]
4	62150-12791		BRACKET	ﾌﾞﾗｹｯﾄ	1	[4DK]
5	04135-00303		UNION	ﾕﾆｵﾝ	1	[4DK]
6	03320-00140		O-RING	Oﾘﾝｸﾞ	1	[4DK]
7	04137-00303		NIPPLE	ﾆｯﾌﾟﾙ	3	[4DK]
8	04139-00303		UNION	ﾕﾆｵﾝ	1	[4DK]
9	53110-12131		ELBOW	ｴﾙﾎﾞ	1	[4DK]
10	50226-29111		COUPLING	ｶｯﾌﾟﾘﾝｸﾞ	2	[4DK]
11	04138-00303		UNION	ﾕﾆｵﾝ	1	[4DK]
12	04150-00303		ELBOW	ｴﾙﾎﾞ	1	[4DK]
13	03320-00140		O-RING	Oﾘﾝｸﾞ	1	[4DK]
14	63130-14061		PLUG	ﾌﾟﾗｸﾞ	2	[4DK]
15	63130-14071		CAP	ｷｬｯﾌﾟ	2	[4DK]
16	63110-12281		NIPPLE	ﾆｯﾌﾟﾙ	2	[4DK]
17	03320-00140		O-RING	Oﾘﾝｸﾞ	2	[4DK]
18	63130-22070		HOSE	ﾎｰｽ	2	[4DK]
19	03320-00141		O-RING	Oﾘﾝｸﾞ	2	[4DK]
20	61439-20702		VALVE,ROTARY	ﾊﾞﾙﾌﾞ	1	[4DK]SEE FIG.75
21	63110-12311		ELBOW	ｴﾙﾎﾞ	4	[4DK]
22	03320-00140		O-RING	Oﾘﾝｸﾞ	4	[4DK]
23	63130-31090		HOSE	ﾎｰｽ	2	A,B,E,F [4DK]
-	63130-31075		HOSE	ﾎｰｽ	2	C,D [4DK]
24	63130-31085		HOSE	ﾎｰｽ	2	A,B,E,F [4DK]
-	63130-31080		HOSE	ﾎｰｽ	2	C,D [4DK]
25	62170-12571		STUD	ｽﾀｯﾄﾞ	1	[4DK]
26	61150-12511		PLATE	ﾌﾟﾚｰﾄ	1	[4DK]
27	63130-21045		HOSE	ﾎｰｽ	1	[VFM/4DK]
-	63130-21040		HOSE	ﾎｰｽ	1	[VFHM/4DK]
28	63130-21055		HOSE	ﾎｰｽ	1	[VFM/4DK]
-	63130-21050		HOSE	ﾎｰｽ	1	[VFHM/4DK]
29	62150-12701		PIPE	ﾊﾟｲﾌﾟ	1	[4DK]
30	01100-08016		BOLT	ﾎﾞﾙﾄ	4	[4DK]
31	02010-00008		WASHER	ﾜｯｼｬ	4	[4DK]
32	04138-00303		UNION	ﾕﾆｵﾝ	2	[4DK]
33	50226-29111		COUPLING	ｶｯﾌﾟﾘﾝｸﾞ	2	[4DK]
34	53110-12131		ELBOW	ｴﾙﾎﾞ	2	[4DK]
35	63130-14061		PLUG	ﾌﾟﾗｸﾞ	2	[4DK]
36	63130-14071		PLUG	ﾌﾟﾗｸﾞ	2	[4DK]
37	62150-12771		BRACKET	ﾌﾞﾗｹｯﾄ	1	[4DK]
38	62150-12781		BRACKET	ﾌﾞﾗｹｯﾄ	1	[4DK]
39	63130-21140		HOSE	ﾎｰｽ	2	[4DK]
40	04134-00303		NIPPLE	ﾆｯﾌﾟﾙ	2	[4DK]
41	03320-00140		O-RING	Oﾘﾝｸﾞ	2	[4DK]
42	62059-12501	+	GUIDE	ｶﾞｲﾄﾞ	2	[4DK]

ROTATING DEVICE

FIG.85 [PR3A7,PR3B7,PR3C7,PR3D7,PR3E7,PR3F7]

(A502PRJ0) ﾛｰﾃｰﾃｨﾝｸﾞﾃﾞﾊﾞｲｽ

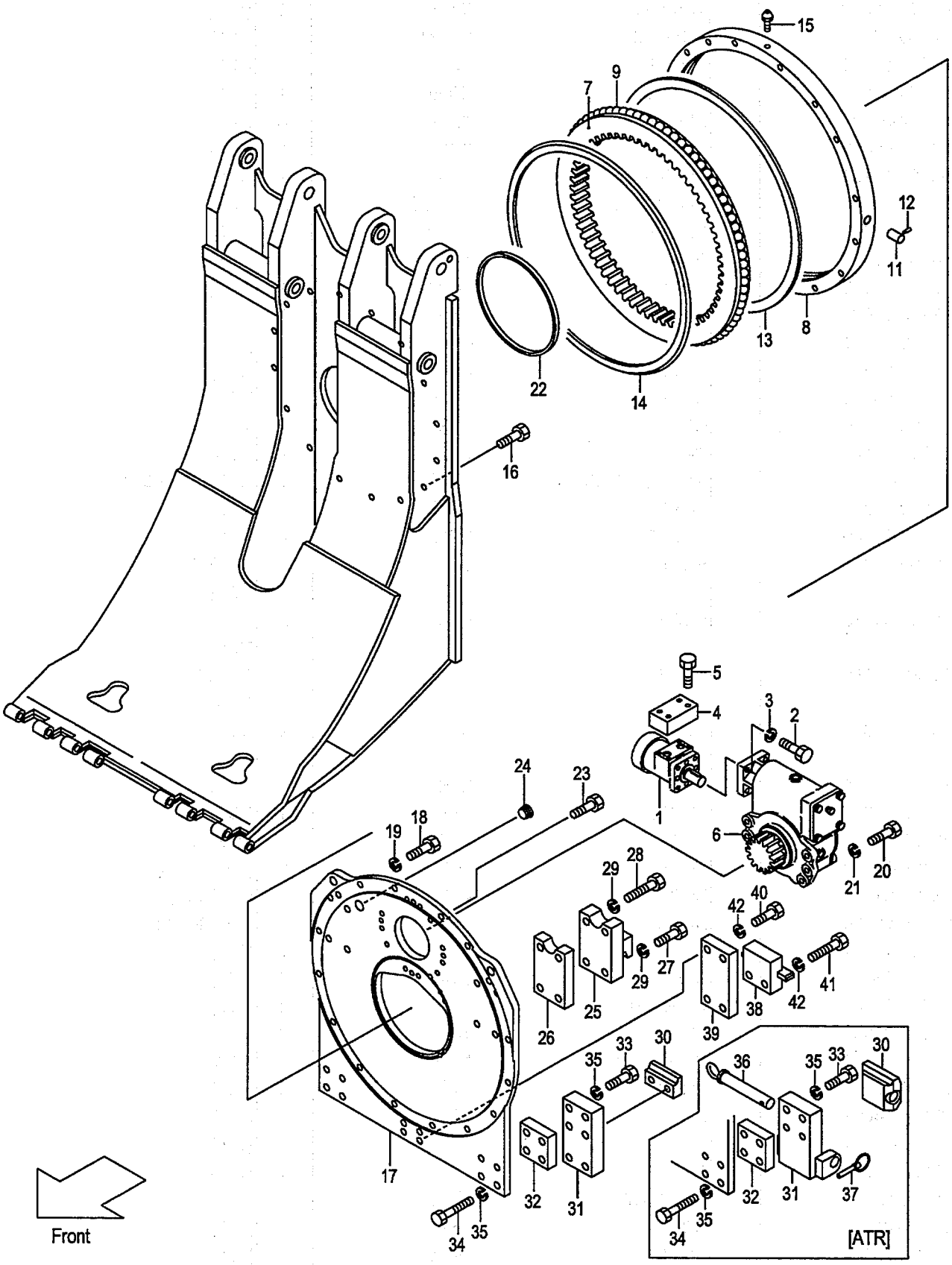

A:PR3A7(J) D:PR3D7(J)
B:PR3B7(J) E:PR3E7(J)
C:PR3C7(J) F:PR3F7(J)

FIG.85
(A502PRJ0)

Item No	Part No.	Mark	Description		Req'd	Remarks : Serial No.
1	62059-12801		MOTOR	ﾓｰﾀ	1	SEE FIG.86
2	01110-10025		BOLT	ﾎﾞﾙﾄ	4	
3	02010-00010		WASHER	ﾜｯｼｬ	4	
4	62159-12702		VALVE,COUNTER-BAL.	ﾊﾞﾙﾌﾞ	1	
5	01100-08045		BOLT	ﾎﾞﾙﾄ	4	
A1	62A79-10101		SUB-ASSY,RD		1	INC.6-24
				ﾛｰﾃｰﾃｨﾝｸﾞﾃﾞﾊﾞｲｽｻﾌﾞｱｯｾﾝ		
6	62159-10201		REDUCTION	ﾘﾀﾞｸｼｮﾝ	1	SEE FIG.78
A2	62159-12071		BRG-ASSY,ROTATING		1	INC.7-15
				ﾛｰﾃｰﾃｨﾝｸﾞﾍﾞｱﾘﾝｸﾞｱｯｾﾝ		
7	NO PART NO.		WHEEL,INNER	ﾎｲｰﾙ	1	
8	NO PART NO.		WHEEL,OUTER	ﾎｲｰﾙ	1	
9	03190-00026		BALL	ﾎﾞｰﾙ	77	
10	NO PART NO.	+	SPACER	ｽﾍﾟｰｻ	77	
11	NO PART NO.		CAP	ｷｬｯﾌﾟ	1	
12	NO PART NO.		PIN	ﾋﾟﾝ	1	
13	62159-12261		SEAL	ｼｰﾙ	1	
14	62159-12271		SEAL	ｼｰﾙ	1	
15	04901-00100		FITTING	ﾌｨｯﾃｨﾝｸﾞ	1	
16	01170-14045		BOLT	ﾎﾞﾙﾄ	16	
17	62159-12132		PLATE,BASE	ﾌﾟﾚｰﾄ	1	
18	01103-14045		BOLT	ﾎﾞﾙﾄ	14	
19	02011-00014		WASHER	ﾜｯｼｬ	14	
20	01103-12035		BOLT	ﾎﾞﾙﾄ	6	
21	02011-00012		WASHER	ﾜｯｼｬ	6	
22	62159-12231		FELT	ﾌｪﾙﾄ	1	
23	01170-14030		BOLT	ﾎﾞﾙﾄ	2	
24	25073-00031		PLUG	ﾌﾟﾗｸﾞ	1	
25	63059-12001		GUIDE	ｶﾞｲﾄﾞ	2	
26	62059-12051		SPACER	ｽﾍﾟｰｻ	2	
27	01103-16070		BOLT	ﾎﾞﾙﾄ	4	
28	01103-16085		BOLT	ﾎﾞﾙﾄ	4	
29	02011-00016		WASHER	ﾜｯｼｬ	8	
30	63549-12041		GUIDE	ｶﾞｲﾄﾞ	2	
-	63039-12682		GUIDE	ｶﾞｲﾄﾞ	2	[ATR]
31	63059-12151		SPACER	ｽﾍﾟｰｻ	2	
-	63059-12601		GUIDE	ｶﾞｲﾄﾞ	2	[ATR]
32	63059-12161		SPACER	ｽﾍﾟｰｻ	2	
33	01103-16070		BOLT	ﾎﾞﾙﾄ	8	
-	01103-16070		BOLT	ﾎﾞﾙﾄ	4	[ATR]
34	01103-16080		BOLT	ﾎﾞﾙﾄ	4	
35	02011-00016		WASHER	ﾜｯｼｬ	12	
-	02011-00016		WASHER	ﾜｯｼｬ	8	[ATR]
36	62039-12691		PIN	ﾋﾟﾝ	2	[ATR]
37	62039-12751		PIN	ﾋﾟﾝ	2	[ATR]
38	62059-12201		BLOCK	ﾌﾞﾛｯｸ	1	
39	63059-12201		SPACER	ｽﾍﾟｰｻ	1	
40	01100-16045		BOLT	ﾎﾞﾙﾄ	2	
41	01100-16055		BOLT	ﾎﾞﾙﾄ	2	
42	02010-00016		WASHER	ﾜｯｼｬ	4	

FIG.86 MOTOR [PR2A7-PR2F7,PR3A7-PR3F7]

(A502PRK0) モータ

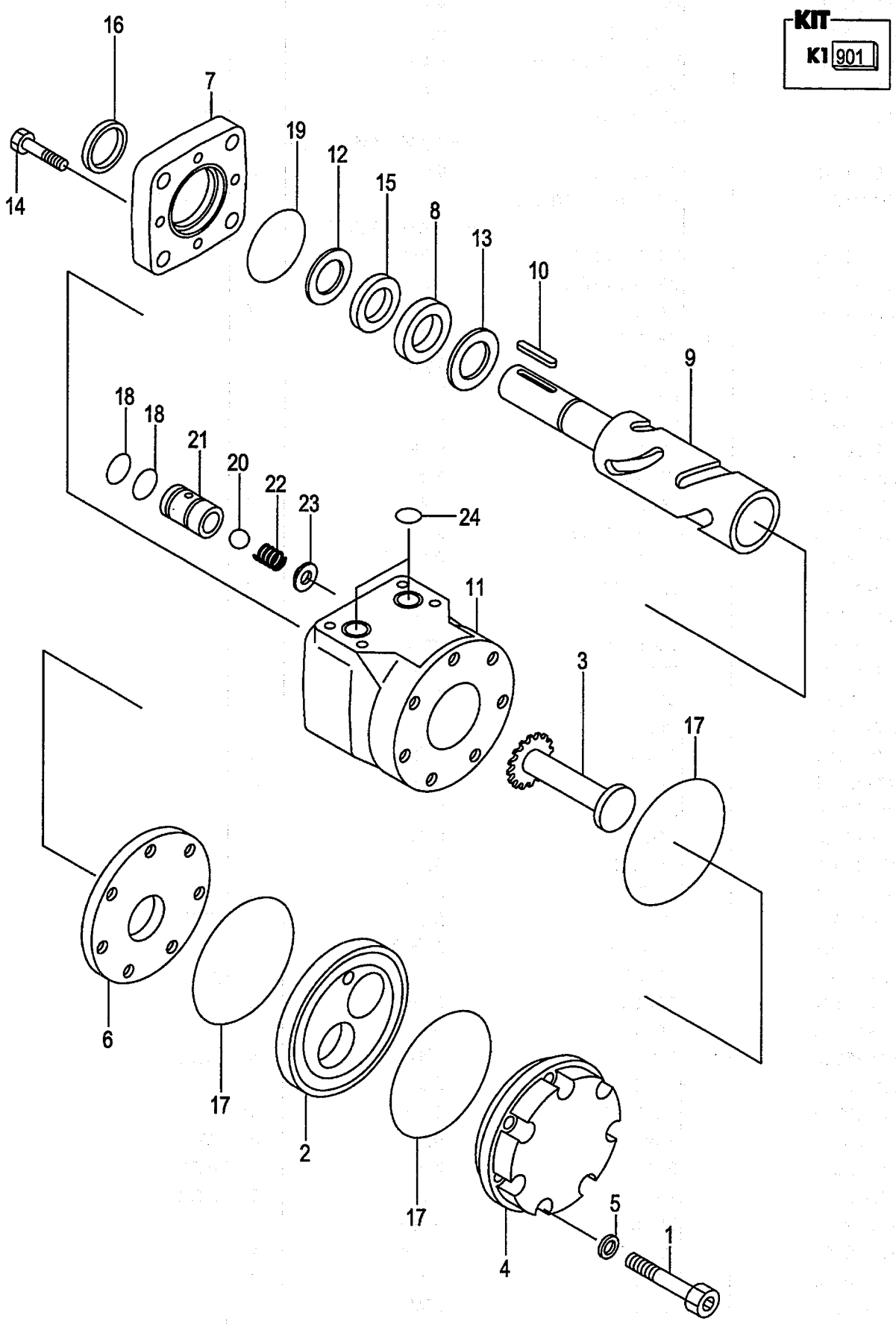

A:PR2A7(J) PR2D7(J) PR3A7(J) PR3D7(J)
PR2B7(J) PR2E7(J) PR3B7(J) PR3E7(J)
PR2C7(J) PR2F7(J) PR3C7(J) PR3F7(J)

FIG.86
(A502PRK0)

Item No	Part No.	Mark	Description		Req'd	Remarks : Serial No.
A1	62059-12801		MOTOR-ASSY	ﾓｰﾀｱｯｾﾝ	1	INC.1-24
1	NO PART NO.	#	SCREW	ｽｸﾘｭ	7	
2	NO PART NO.	#	GYRATOR	ｼﾞｬｲﾚｰﾀ	1	
3	NO PART NO.	#	DRIVE	ﾄﾞﾗｲﾌﾞ	1	
4	NO PART NO.	#	CAP	ｷｬｯﾌﾟ	1	
5	NO PART NO.	*#	WASHER	ﾜｯｼｬ	7	
6	62159-13251		SPACER	ｽﾍﾟｰｻ	1	
7	62159-13041		FLANGE	ﾌﾗﾝｼﾞ	1	
8	62159-13051		RACE	ﾚｰｽ	1	
9	62159-13061		SHAFT,OUTPUT	ｼｬﾌﾄ	1	
10	62159-13101		KEY	ｷｰ	1	
11	62159-13261		HOUSING	ﾊｳｼﾞﾝｸﾞ	1	
12	NO PART NO.	#	RING	ﾘﾝｸﾞ	1	
13	62159-13081		BEARING	ﾍﾞｱﾘﾝｸﾞ	1	
14	62159-13091		SCREW	ｽｸﾘｭ	4	
15	NO PART NO.	#*	SEAL,OIL	ｼｰﾙ	1	
16	NO PART NO.	#*	SEAL,DUST	ｼｰﾙ	1	
17	NO PART NO.	#*	O-RING	Oﾘﾝｸﾞ	3	
18	NO PART NO.	#*	O-RING	Oﾘﾝｸﾞ	4	
19	NO PART NO.	#*	O-RING	Oﾘﾝｸﾞ	1	
A2	62159-13161		VALVE-ASSY,CHECK	ﾁｪｯｸﾊﾞﾙﾌﾞｱｯｾﾝ	2	INC.20-23
20	NO PART NO.	#	BALL	ﾎﾞｰﾙ	2	
21	NO PART NO.	#	BODY	ﾎﾞﾃﾞｨ	2	
22	NO PART NO.	#	SPRING	ｽﾌﾟﾘﾝｸﾞ	2	
23	NO PART NO.	#	WASHER	ﾜｯｼｬ	2	
24	NO PART NO.	#*	O-RING	Oﾘﾝｸﾞ	2	
K1	62159-13281		KIT,SEAL	ｼｰﾙｷｯﾄ	1	INC.5,15-19,24

FIG.87 ROTATING CLAMP [PRX2A9,PRX2C9,PRX2E9]

(A502PRL0) ﾛｰﾃｰﾃｨﾝｸﾞｸﾗﾝﾌﾟ

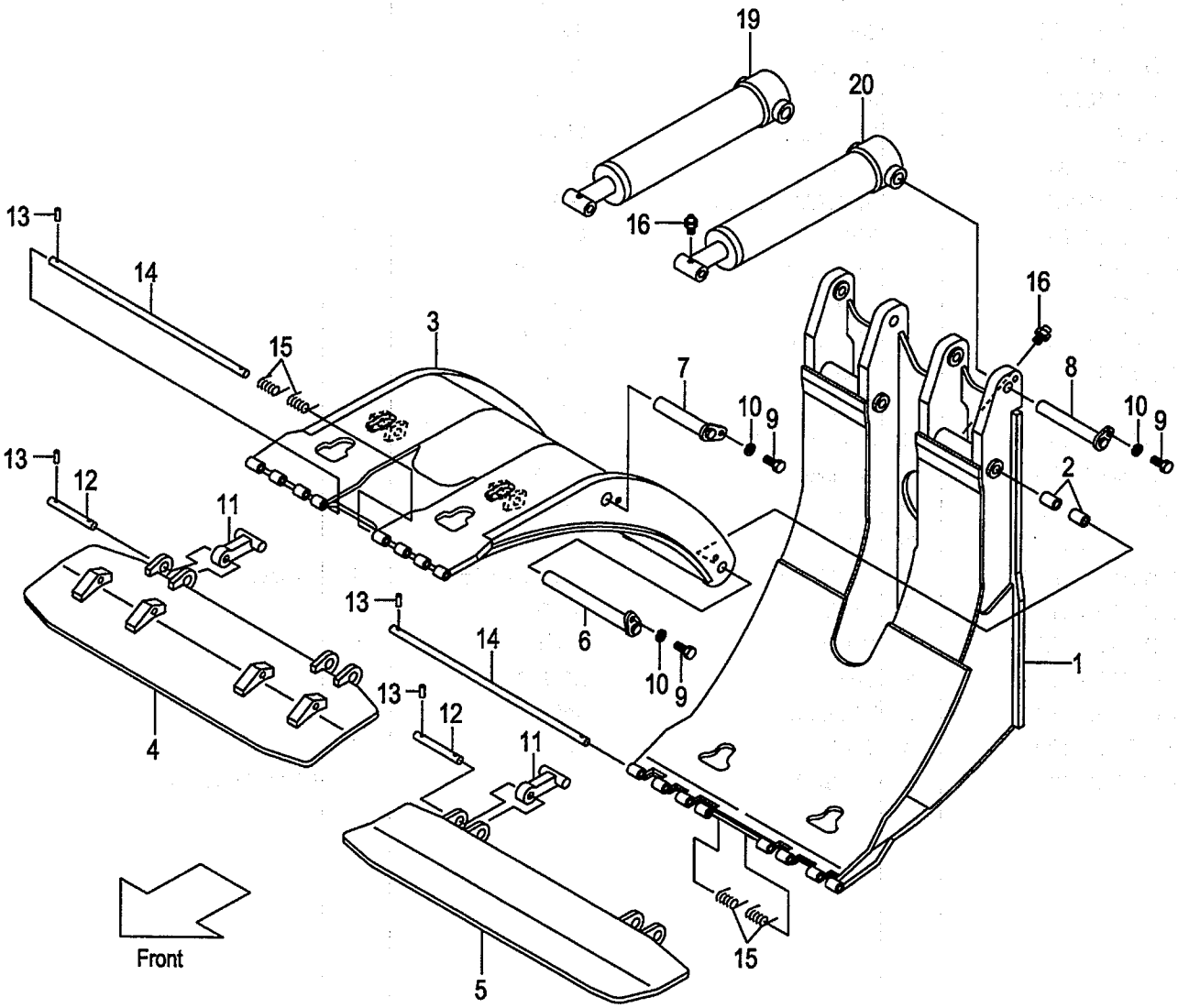

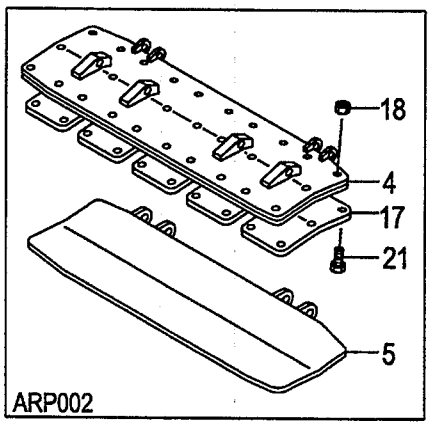

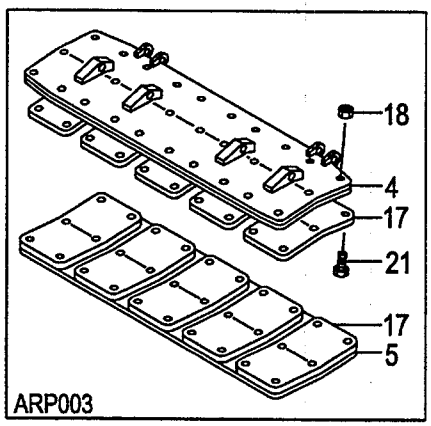

A:PRX2A9(VM/J)
B:PRX2C9(VM/J)
C:PRX2E9(VM/J)

FIG.87
(A502PRL0)

Item No	Part No.	Mark	Description		Req'd	Remarks : Serial No.
A1	62A79-20101		CLAMP-ASSY,ROTATING		1	A
				ﾛｰﾃｰﾃｨﾝｸﾞｸﾗﾝﾌﾟｱｯｾﾝ		INC.1-3,6-16,33,34 & FIG.92
-	62C79-20101		CLAMP-ASSY,ROTATING		1	B
				ﾛｰﾃｰﾃｨﾝｸﾞｸﾗﾝﾌﾟｱｯｾﾝ		INC.1-3,6-16,33,34 & FIG.92
-	62E79-20101		CLAMP-ASSY,ROTATING		1	C
				ﾛｰﾃｰﾃｨﾝｸﾞｸﾗﾝﾌﾟｱｯｾﾝ		INC.1-3,6-16,33,34 & FIG.92
A2	62A79-20202		SUB-ASSY,RC		1	A
				ﾛｰﾃｰﾃｨﾝｸﾞｸﾗﾝﾌﾟｻﾌﾞｱｯｾﾝ		INC.1-3,6-16,33,34
-	62C79-20202		SUB-ASSY,RC		1	B
				ﾛｰﾃｰﾃｨﾝｸﾞｸﾗﾝﾌﾟｻﾌﾞｱｯｾﾝ		INC.1-3,6-16,33,34
-	62E79-20202		SUB-ASSY,RC		1	C
				ﾛｰﾃｰﾃｨﾝｸﾞｸﾗﾝﾌﾟｻﾌﾞｱｯｾﾝ		INC.1-3,6-16,33,34
1	62479-20312		FRAME	ﾌﾚｰﾑ	1	A
-	62479-20302		FRAME	ﾌﾚｰﾑ	1	B
-	62479-20322		FRAME	ﾌﾚｰﾑ	1	C
2	62439-22181		BUSH	ﾌﾞｯｼﾝｸﾞ	4	
3	62479-20471		ARM,LONG	ｱｰﾑ	1	A
-	62479-20461		ARM,LONG	ｱｰﾑ	1	B
-	62479-20481		ARM,LONG	ｱｰﾑ	1	C
4	62479-20611		PAD,UPPER	ﾊﾟｯﾄﾞ	1	
-	62479-20611		PAD,UPPER	ﾊﾟｯﾄﾞ	1	[ARP001]
-	62479-20641		PAD,UPPER	ﾊﾟｯﾄﾞ	1	[ARP002]
-	62479-20641		PAD,UPPER	ﾊﾟｯﾄﾞ	1	[ARP003]
5	62479-20601		PAD,LOWER	ﾊﾟｯﾄﾞ	1	
-	62479-20601		PAD,LOWER	ﾊﾟｯﾄﾞ	1	[ARP001]
-	62479-20601		PAD,LOWER	ﾊﾟｯﾄﾞ	1	[ARP002]
-	62479-20631		PAD,LOWER	ﾊﾟｯﾄﾞ	1	[ARP003]
6	62479-23861		PIN	ﾋﾟﾝ	2	
7	62479-23801		PIN	ﾋﾟﾝ	2	
8	62479-23821		PIN	ﾋﾟﾝ	2	
9	01100-12020		BOLT	ﾎﾞﾙﾄ	6	
10	02010-00012		WASHER	ﾜｯｼｬ	6	
11	62479-23901		STOPPER	ｽﾄｯﾊﾟ	4	
12	62479-24921		SHAFT	ｼｬﾌﾄ	4	
13	02270-04020		PIN	ﾋﾟﾝ	12	
14	62479-24901		SHAFT	ｼｬﾌﾄ	2	
15	62479-24951		SPRING	ｽﾌﾟﾘﾝｸﾞ	4	
16	214A8-52051		FITTING	ﾌｨｯﾃｨﾝｸﾞ	4	
17	62479-24502		RUBBER	ﾗﾊﾞｰ	5	[ARP002]
-	62479-24502		RUBBER	ﾗﾊﾞｰ	10	[ARP003]
18	01400-00010		NUT	ﾅｯﾄ	30	[ARP002]
-	01400-00010		NUT	ﾅｯﾄ	60	[ARP003]
19	62479-20821		CYL,RH	ｼﾘﾝﾀﾞ	1	A
						SEE FIG.89
-	62479-20801		CYL,RH	ｼﾘﾝﾀﾞ	1	B
						SEE FIG.89
-	62479-20841		CYL,RH	ｼﾘﾝﾀﾞ	1	C
						SEE FIG.89
20	62479-20831		CYL,LH	ｼﾘﾝﾀﾞ	1	A
						SEE FIG.89

FIG.87 ROTATING CLAMP [PRX2A9,PRX2C9,PRX2E9]

(A502PRL0) ﾛｰﾃｰﾃｨﾝｸﾞｸﾗﾝﾌﾟ

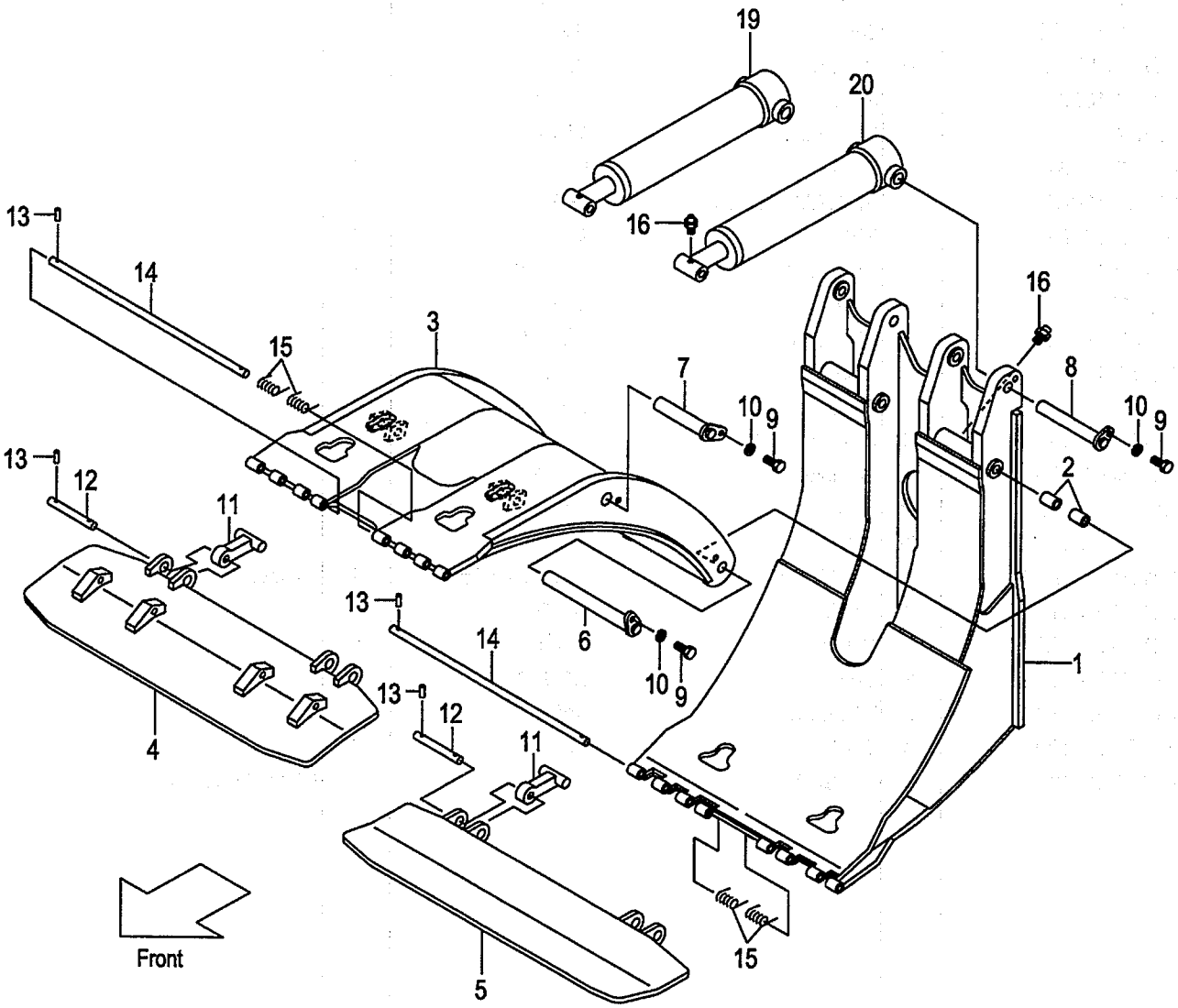

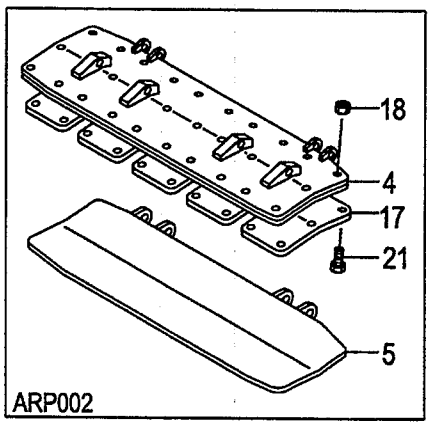

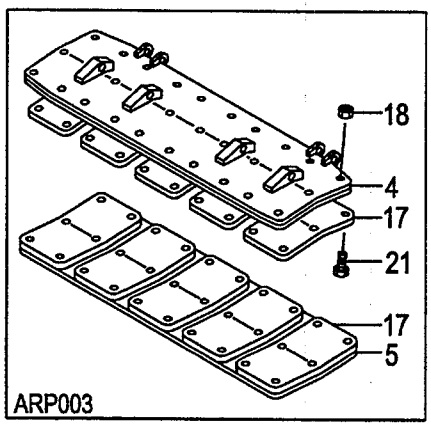

A:PRX2A9(VM/J)
B:PRX2C9(VM/J)
C:PRX2E9(VM/J)

FIG.87
(A502PRL0)

Item No	Part No.	Mark	Description		Req'd	Remarks : Serial No.
-	62479-20811		CYL,LH	ｼﾘﾝﾀﾞ	1	B
						SEE FIG.89
-	62479-20851		CYL,LH	ｼﾘﾝﾀﾞ	1	C
						SEE FIG.89
21	01120-10014		BOLT	ﾎﾞﾙﾄ	30	[ARP002]
-	01120-10014		BOLT	ﾎﾞﾙﾄ	60	[ARP003]
22	63110-18901	+	CHART,LOAD	ﾁｬｰﾄ	1	
-	514A3-82301	+	CHART,LOAD	ﾁｬｰﾄ	1	[EXB/ENGLISH][EXC/ENGLISH]
-	514A3-82301	+	CHART,LOAD	ﾁｬｰﾄ	1	[EXE/ENGLISH][EXN/ENGLISH]
-	63110-18911	+	CHART,LOAD	ﾁｬｰﾄ	1	[EXA/ENGLISH]
-	524T3-84031	+	CHART,LOAD	ﾁｬｰﾄ	1	(RUSSIAN)
-	63110-18921	+	CHART,LOAD	ﾁｬｰﾄ	1	(CHINESE)
-	514A3-82321	+	CHART,LOAD	ﾁｬｰﾄ	1	(GERMAN)
-	514A3-82341	+	CHART,LOAD	ﾁｬｰﾄ	1	(FRENCH)
-	514A3-82331	+	CHART,LOAD	ﾁｬｰﾄ	1	(SPANISH)
-	514A3-82361	+	CHART,LOAD	ﾁｬｰﾄ	1	(DANISH)
-	514A3-82381	+	CHART,LOAD	ﾁｬｰﾄ	1	(GREEK)
-	514A3-82371	+	CHART,LOAD	ﾁｬｰﾄ	1	(ITALIAN)
-	514A3-82351	+	CHART,LOAD	ﾁｬｰﾄ	1	(DUTCH)
-	514A3-82391	+	CHART,LOAD	ﾁｬｰﾄ	1	(PORTUGUESE)
23	02432-01008	+	RIVET	ﾘﾍﾞｯﾄ	4	
24	09210-10300	+	PLATE,NAME	ﾌﾟﾚｰﾄ	1	
-	09210-10300	+	PLATE,NAME	ﾌﾟﾚｰﾄ	1	(ENGLISH)
-	63110-32111	+	PLATE,NAME	ﾌﾟﾚｰﾄ	1	(RUSSIAN)
-	09201-06201	+	PLATE,NAME	ﾌﾟﾚｰﾄ	1	(CHINESE)
-	63110-19211	+	PLATE,NAME	ﾌﾟﾚｰﾄ	1	(GERMAN)
-	63110-19251	+	PLATE,NAME	ﾌﾟﾚｰﾄ	1	(FRENCH)
-	63110-19231	+	PLATE,NAME	ﾌﾟﾚｰﾄ	1	(SPANISH)
-	63110-19291	+	PLATE,NAME	ﾌﾟﾚｰﾄ	1	(DANISH)
-	63110-19331	+	PLATE,NAME	ﾌﾟﾚｰﾄ	1	(GREEK)
-	63110-19311	+	PLATE,NAME	ﾌﾟﾚｰﾄ	1	(ITALIAN)
-	63110-19271	+	PLATE,NAME	ﾌﾟﾚｰﾄ	1	(DUTCH)
-	63110-19351	+	PLATE,NAME	ﾌﾟﾚｰﾄ	1	(PORTUGUESE)
25	63110-18521	+	PLATE,CAUTION	ﾌﾟﾚｰﾄ	1	(ENGLISH)
-	63110-32121	+	PLATE,CAUTION	ﾌﾟﾚｰﾄ	1	(RUSSIAN)
-	63110-18511	+	PLATE,CAUTION	ﾌﾟﾚｰﾄ	1	(CHINESE)
-	63110-19371	+	PLATE,CAUTION	ﾌﾟﾚｰﾄ	1	(GERMAN)
-	63110-19391	+	PLATE,CAUTION	ﾌﾟﾚｰﾄ	1	(FRENCH)
-	63110-19411	+	PLATE,CAUTION	ﾌﾟﾚｰﾄ	1	(SPANISH)
-	63110-19381	+	PLATE,CAUTION	ﾌﾟﾚｰﾄ	1	(DANISH)
-	63110-19441	+	PLATE,CAUTION	ﾌﾟﾚｰﾄ	1	(GREEK)
-	63110-19431	+	PLATE,CAUTION	ﾌﾟﾚｰﾄ	1	(ITALIAN)
-	63110-19401	+	PLATE,CAUTION	ﾌﾟﾚｰﾄ	1	(DUTCH)
-	63110-19421	+	PLATE,CAUTION	ﾌﾟﾚｰﾄ	1	(PORTUGUESE)
26	63110-19761	+	KNOB	ﾉﾌﾞ	1	
27	63110-19961	+	DECAL	ﾃﾞｶﾙ	1	
28	63110-19131	+	KNOB	ﾉﾌﾞ	1	
29	63110-19691	+	KNOB	ﾉﾌﾞ	1	
30	63110-19891	+	DECAL	ﾃﾞｶﾙ	1	
31	214A7-42181	+	KNOB	ﾉﾌﾞ	1	

FIG.87 ROTATING CLAMP [PRX2A9,PRX2C9,PRX2E9]

(A502PRL0) ﾛｰﾃｰﾃｨﾝｸﾞｸﾗﾝﾌﾟ

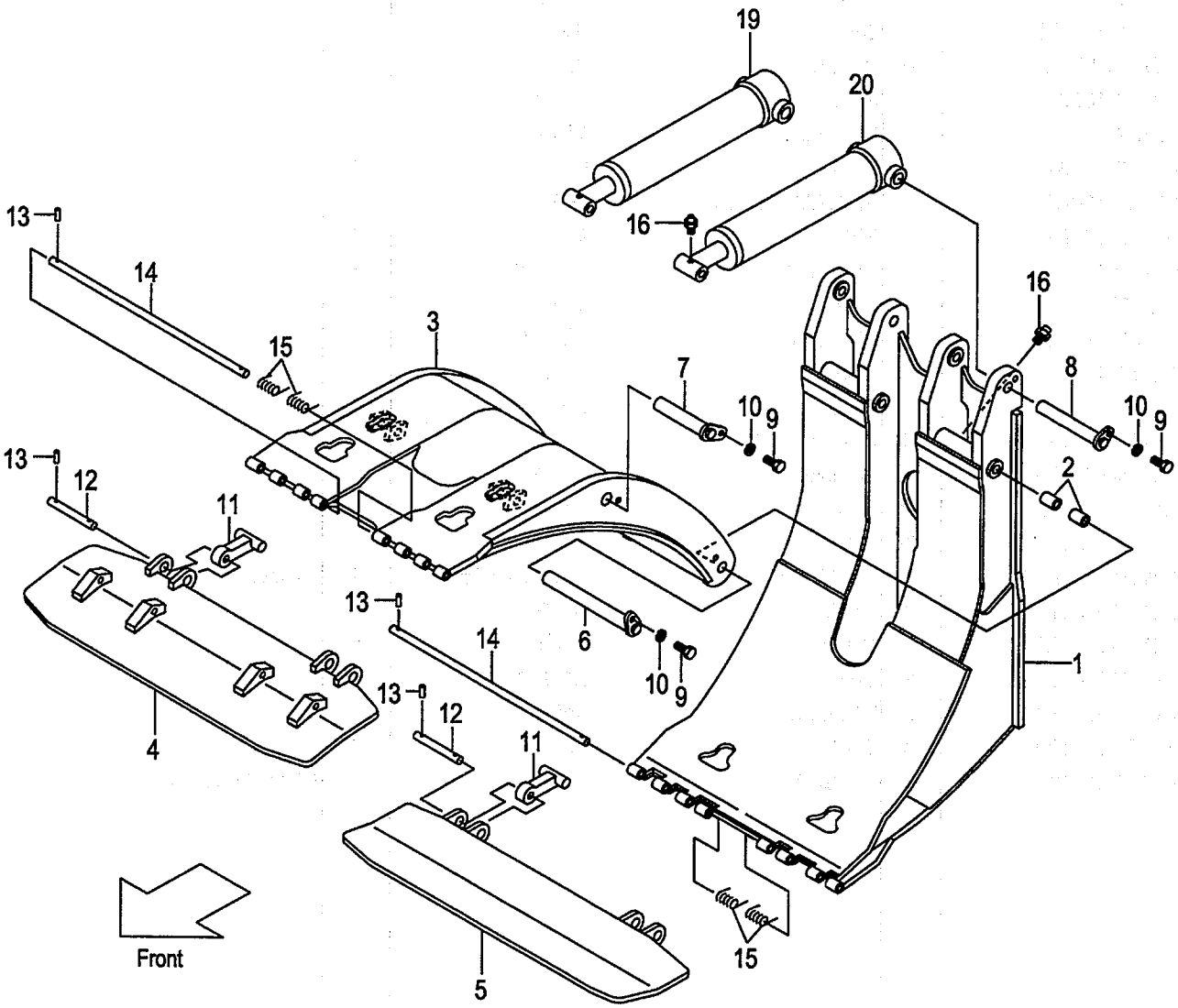

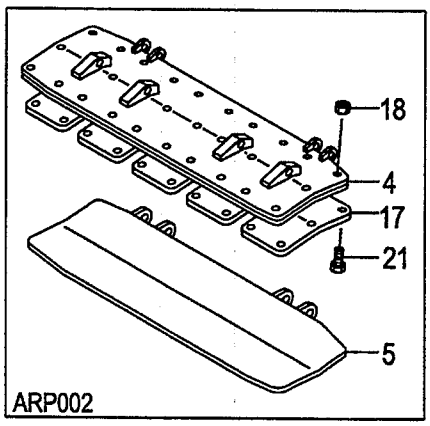

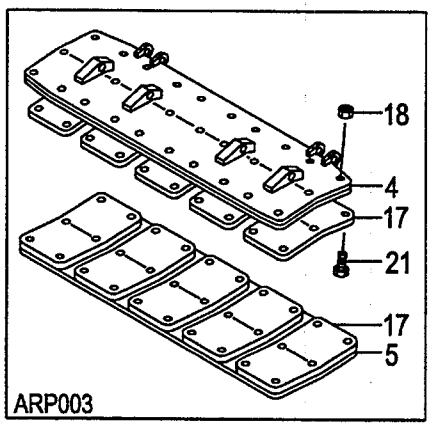

A:PRX2A9(VM/J)
B:PRX2C9(VM/J)
C:PRX2E9(VM/J)

FIG.87
(A502PRL0)

Item No	Part No.	Mark	Description		Req'd	Remarks : Serial No.
32	62479-23591	+	COLLAR	ｶﾗｰ	2	
33	04901-00160	+	NIPPLE	ﾆｯﾌﾟﾙ	2	
34	62479-27001	+	DECAL,CAUTION	ﾃﾞｶﾙ	1	
35	27419-12072	+	DECAL,CAUTION	ﾃﾞｶﾙ	2	

FIG.88 ROTATING CLAMP [PRX2B9,PRX2D9,PRX2F9]

(A502PRM0) ﾛｰﾃｰﾃｨﾝｸﾞｸﾗﾝﾌﾟ

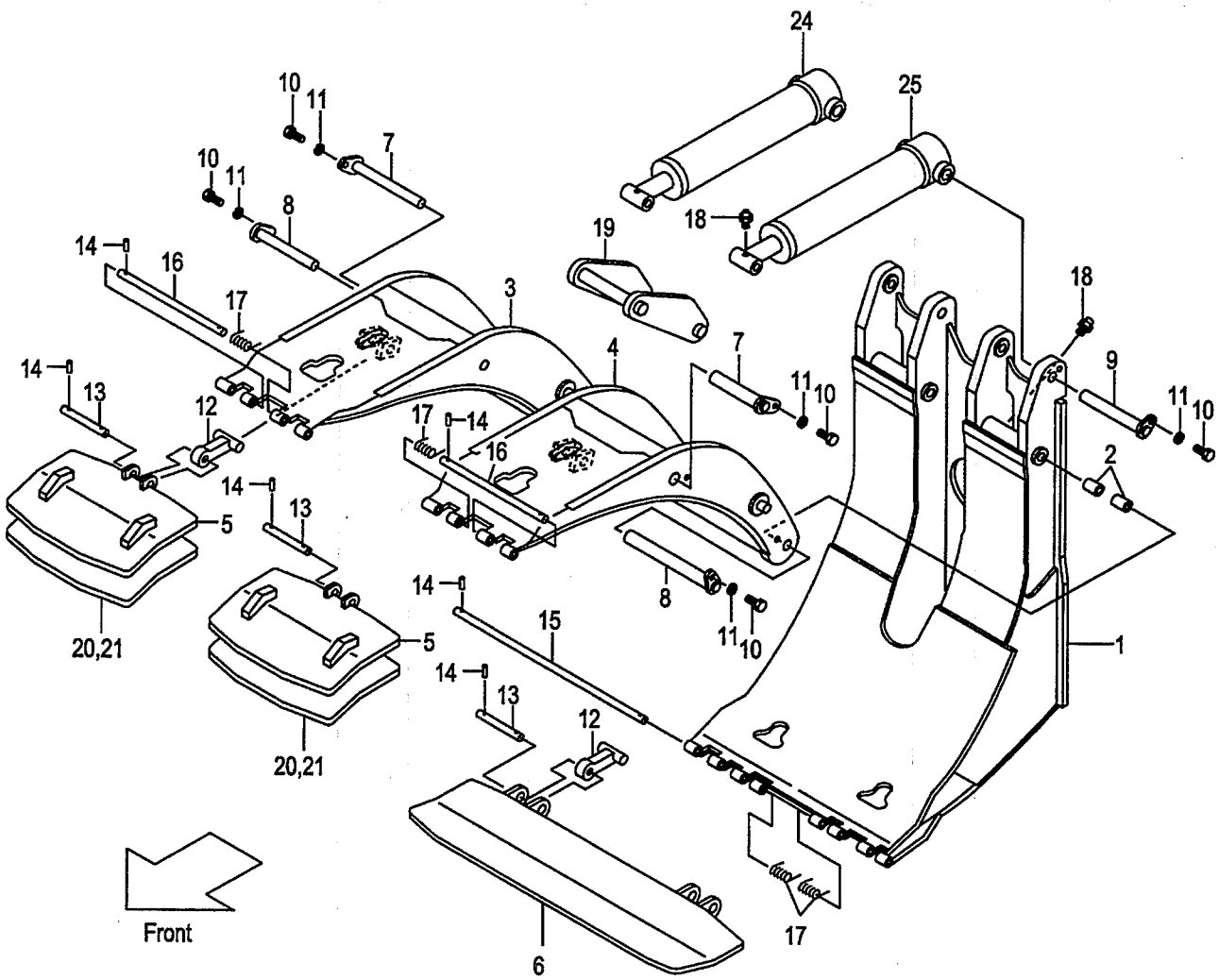

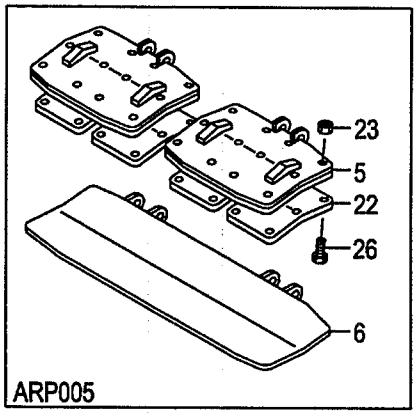

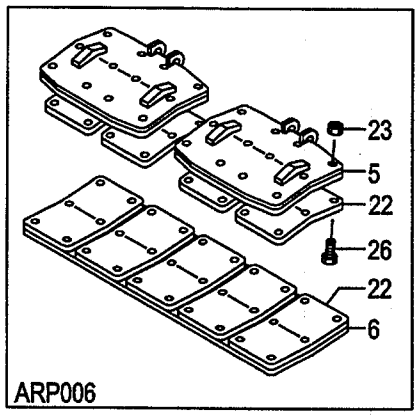

A:PRX2B9(VM/J)
B:PRX2D9(VM/J)
C:PRX2F9(VM/J)

FIG.88
(A502PRM0)

Item No	Part No.	Mark	Description		Req'd	Remarks : Serial No.
A1	62B79-20101		CLAMP-ASSY,ROTATING		1	A
				ﾛｰﾃｰﾃｨﾝｸﾞｸﾗﾝﾌﾟｱｯｾﾝ		INC.1-3,6-21,38,39 & FIG.92
-	62D79-20101		CLAMP-ASSY,ROTATING		1	B
				ﾛｰﾃｰﾃｨﾝｸﾞｸﾗﾝﾌﾟｱｯｾﾝ		INC.1-3,6-21,38,39 & FIG.92
-	62F79-20101		CLAMP-ASSY,ROTATING		1	C
				ﾛｰﾃｰﾃｨﾝｸﾞｸﾗﾝﾌﾟｱｯｾﾝ		INC.1-3,6-21,38,39 & FIG.92
A2	62B79-20202		SUB-ASSY,RC		1	A
				ﾛｰﾃｰﾃｨﾝｸﾞｸﾗﾝﾌﾟｻﾌﾞｱｯｾﾝ		INC.1-3,6-21,38,39
-	62D79-20202		SUB-ASSY,RC		1	B
				ﾛｰﾃｰﾃｨﾝｸﾞｸﾗﾝﾌﾟｻﾌﾞｱｯｾﾝ		INC.1-3,6-21,38,39
-	62F79-20202		SUB-ASSY,RC		1	C
				ﾛｰﾃｰﾃｨﾝｸﾞｸﾗﾝﾌﾟｻﾌﾞｱｯｾﾝ		INC.1-3,6-21,38,39
1	62479-20312		FRAME	ﾌﾚｰﾑ	1	A
-	62479-20302		FRAME	ﾌﾚｰﾑ	1	B
-	62479-20322		FRAME	ﾌﾚｰﾑ	1	C
2	62439-22181		BUSH	ﾌﾞｯｼﾝｸﾞ	4	
3	62479-20421		ARM,LONG,RH	ｱｰﾑ	1	A
-	62479-20401		ARM,LONG,RH	ｱｰﾑ	1	B
-	62479-20441		ARM,LONG,RH	ｱｰﾑ	1	C
4	62479-20431		ARM,LONG,LH	ｱｰﾑ	1	A
-	62479-20411		ARM,LONG,LH	ｱｰﾑ	1	B
-	62479-20451		ARM,LONG,LH	ｱｰﾑ	1	C
5	62479-20621		PAD,UPPER	ﾊﾟｯﾄﾞ	2	
-	62479-20621		PAD,UPPER	ﾊﾟｯﾄﾞ	2	[ARP004]
-	62479-20651		PAD,UPPER	ﾊﾟｯﾄﾞ	2	[ARP005][ARP006]
6	62479-20601		PAD,LOWER	ﾊﾟｯﾄﾞ	1	
-	62479-20601		PAD,LOWER	ﾊﾟｯﾄﾞ	1	[ARP004][ARP005]
-	62479-20631		PAD,LOWER	ﾊﾟｯﾄﾞ	1	[ARP006]
7	62479-23841		PIN	ﾋﾟﾝ	2	
8	62479-23801		PIN	ﾋﾟﾝ	2	
9	62479-23821		PIN	ﾋﾟﾝ	2	
10	01100-12020		BOLT	ﾎﾞﾙﾄ	6	
11	02010-00012		WASHER	ﾜｯｼｬ	6	
12	62479-23901		STOPPER	ｽﾄｯﾊﾟ	4	
13	62479-24921		SHAFT	ｼｬﾌﾄ	4	
14	02270-04020		PIN	ﾋﾟﾝ	14	
15	62479-24901		SHAFT	ｼｬﾌﾄ	1	
16	62479-24911		SHAFT	ｼｬﾌﾄ	2	
17	62479-24951		SPRING	ｽﾌﾟﾘﾝｸﾞ	4	
18	214A8-52051		FITTING	ﾌｨｯﾃｨﾝｸﾞ	4	
19	62479-23701		LINK	ﾘﾝｸ	1	
20	62479-23751		RUBBER	ﾗﾊﾞｰ	2	
21	214A8-42661		BOLT	ﾎﾞﾙﾄ	2	
22	62479-24502		RUBBER	ﾗﾊﾞｰ	4	[ARP005]
-	62479-24502		RUBBER	ﾗﾊﾞｰ	9	[ARP006]
23	01400-00010		NUT	ﾅｯﾄ	24	[ARP005]
-	01400-00010		NUT	ﾅｯﾄ	54	[ARP006]
24	62479-20821		CYL,RH	ｼﾘﾝﾀﾞ	1	A
						SEE FIG.89

FIG.88 ROTATING CLAMP [PRX2B9,PRX2D9,PRX2F9]

(A502PRM0) ﾛｰﾃｰﾃｨﾝｸﾞｸﾗﾝﾌﾟ

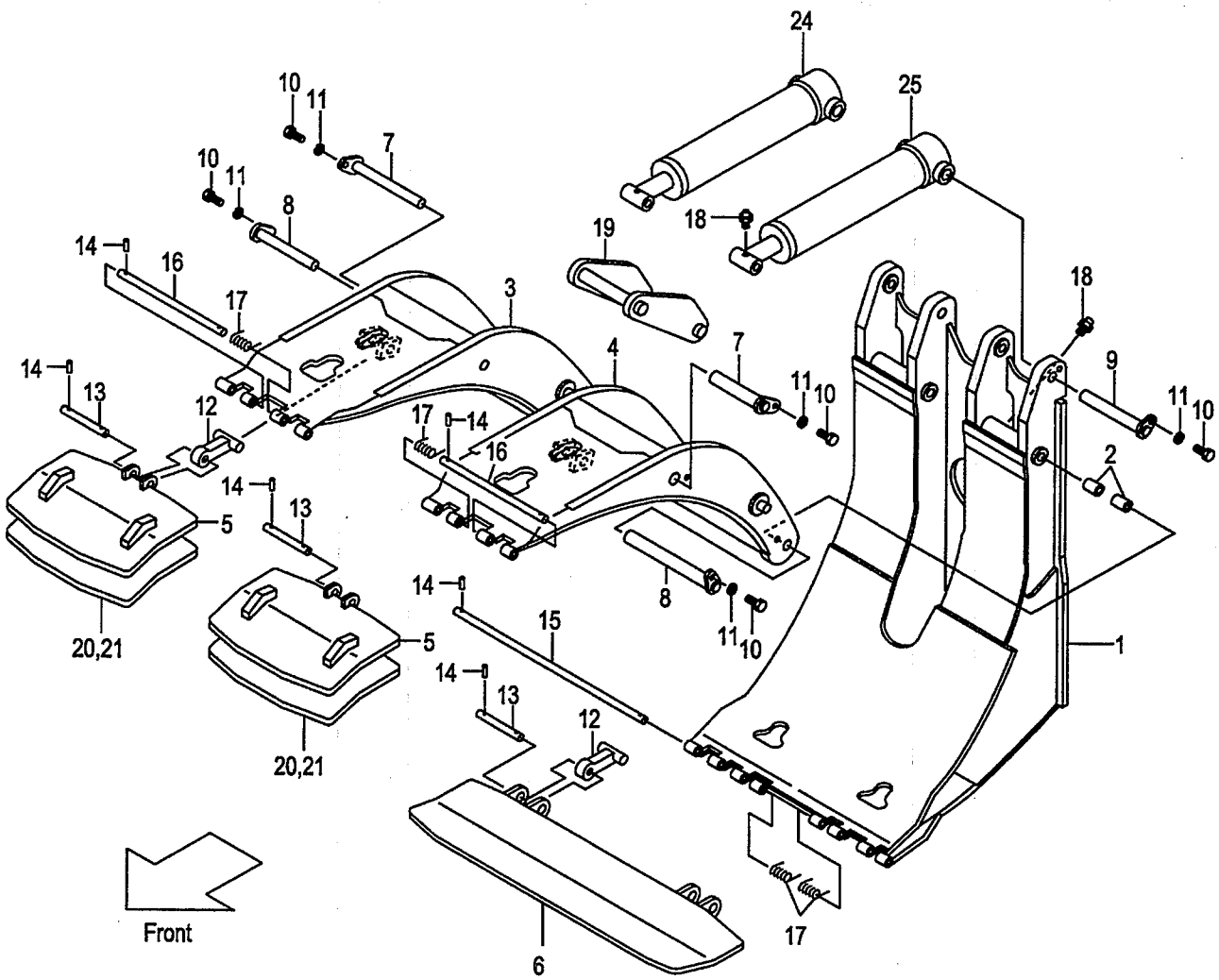

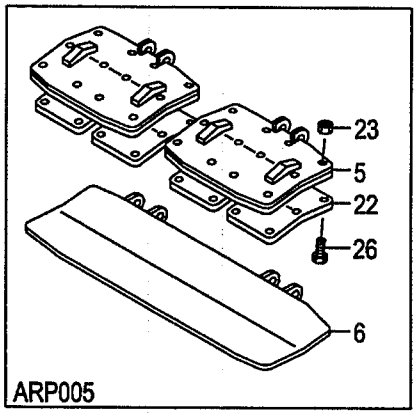

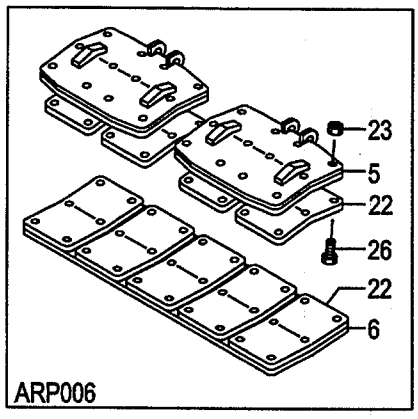

A:PRX2B9(VM/J)
B:PRX2D9(VM/J)
C:PRX2F9(VM/J)

FIG.88
(A502PRM0)

Item No	Part No.	Mark	Description		Req'd	Remarks : Serial No.
-	62479-20801		CYL,RH	ｼﾘﾝﾀﾞ	1	B SEE FIG.89
-	62479-20841		CYL,RH	ｼﾘﾝﾀﾞ	1	C SEE FIG.89
25	62479-20831		CYL,LH	ｼﾘﾝﾀﾞ	1	A SEE FIG.89
-	62479-20811		CYL,LH	ｼﾘﾝﾀﾞ	1	B SEE FIG.89
-	62479-20851		CYL,LH	ｼﾘﾝﾀﾞ	1	C SEE FIG.89
26	01120-10014		BOLT	ﾎﾞﾙﾄ	24	[ARP005]
-	01120-10014		BOLT	ﾎﾞﾙﾄ	54	[ARP006]
27	63110-18901	+	CHART,LOAD	ﾁｬｰﾄ	1	
-	514A3-82301	+	CHART,LOAD	ﾁｬｰﾄ	1	[EXB/ENGLISH][EXC/ENGLISH]
-	514A3-82301	+	CHART,LOAD	ﾁｬｰﾄ	1	[EXE/ENGLISH][EXN/ENGLISH]
-	63110-18911	+	CHART,LOAD	ﾁｬｰﾄ	1	[EXA/ENGLISH]
-	524T3-84031	+	CHART,LOAD	ﾁｬｰﾄ	1	(RUSSIAN)
-	63110-18921	+	CHART,LOAD	ﾁｬｰﾄ	1	(CHINESE)
-	514A3-82321	+	CHART,LOAD	ﾁｬｰﾄ	1	(GERMAN)
-	514A3-82341	+	CHART,LOAD	ﾁｬｰﾄ	1	(FRENCH)
-	514A3-82331	+	CHART,LOAD	ﾁｬｰﾄ	1	(SPANISH)
-	514A3-82361	+	CHART,LOAD	ﾁｬｰﾄ	1	(DANISH)
-	514A3-82381	+	CHART,LOAD	ﾁｬｰﾄ	1	(GREEK)
-	514A3-82371	+	CHART,LOAD	ﾁｬｰﾄ	1	(ITALIAN)
-	514A3-82351	+	CHART,LOAD	ﾁｬｰﾄ	1	(DUTCH)
-	514A3-82391	+	CHART,LOAD	ﾁｬｰﾄ	1	(PORTUGUESE)
28	02432-01008	+	RIVET	ﾘﾍﾞｯﾄ	4	
29	09210-10300	+	PLATE,NAME	ﾌﾟﾚｰﾄ	1	
-	09210-10300	+	PLATE,NAME	ﾌﾟﾚｰﾄ	1	(ENGLISH)
-	63110-32111	+	PLATE,NAME	ﾌﾟﾚｰﾄ	1	(RUSSIAN)
-	09201-06201	+	PLATE,NAME	ﾌﾟﾚｰﾄ	1	(CHINESE)
-	63110-19211	+	PLATE,NAME	ﾌﾟﾚｰﾄ	1	(GERMAN)
-	63110-19251	+	PLATE,NAME	ﾌﾟﾚｰﾄ	1	(FRENCH)
-	63110-19231	+	PLATE,NAME	ﾌﾟﾚｰﾄ	1	(SPANISH)
-	63110-19291	+	PLATE,NAME	ﾌﾟﾚｰﾄ	1	(DANISH)
-	63110-19331	+	PLATE,NAME	ﾌﾟﾚｰﾄ	1	(GREEK)
-	63110-19311	+	PLATE,NAME	ﾌﾟﾚｰﾄ	1	(ITALIAN)
-	63110-19271	+	PLATE,NAME	ﾌﾟﾚｰﾄ	1	(DUTCH)
-	63110-19351	+	PLATE,NAME	ﾌﾟﾚｰﾄ	1	(PORTUGUESE)
30	63110-18521	+	PLATE,CAUTION	ﾌﾟﾚｰﾄ	1	(ENGLISH)
-	63110-32121	+	PLATE,CAUTION	ﾌﾟﾚｰﾄ	1	(RUSSIAN)
-	63110-18511	+	PLATE,CAUTION	ﾌﾟﾚｰﾄ	1	(CHINESE)
-	63110-19371	+	PLATE,CAUTION	ﾌﾟﾚｰﾄ	1	(GERMAN)
-	63110-19391	+	PLATE,CAUTION	ﾌﾟﾚｰﾄ	1	(FRENCH)
-	63110-19411	+	PLATE,CAUTION	ﾌﾟﾚｰﾄ	1	(SPANISH)
-	63110-19381	+	PLATE,CAUTION	ﾌﾟﾚｰﾄ	1	(DANISH)
-	63110-19441	+	PLATE,CAUTION	ﾌﾟﾚｰﾄ	1	(GREEK)
-	63110-19431	+	PLATE,CAUTION	ﾌﾟﾚｰﾄ	1	(ITALIAN)
-	63110-19401	+	PLATE,CAUTION	ﾌﾟﾚｰﾄ	1	(DUTCH)
-	63110-19421	+	PLATE,CAUTION	ﾌﾟﾚｰﾄ	1	(PORTUGUESE)

FIG.88 ROTATING CLAMP [PRX2B9,PRX2D9,PRX2F9]

(A502PRM0) ﾛｰﾃｰﾃｨﾝｸﾞｸﾗﾝﾌﾟ

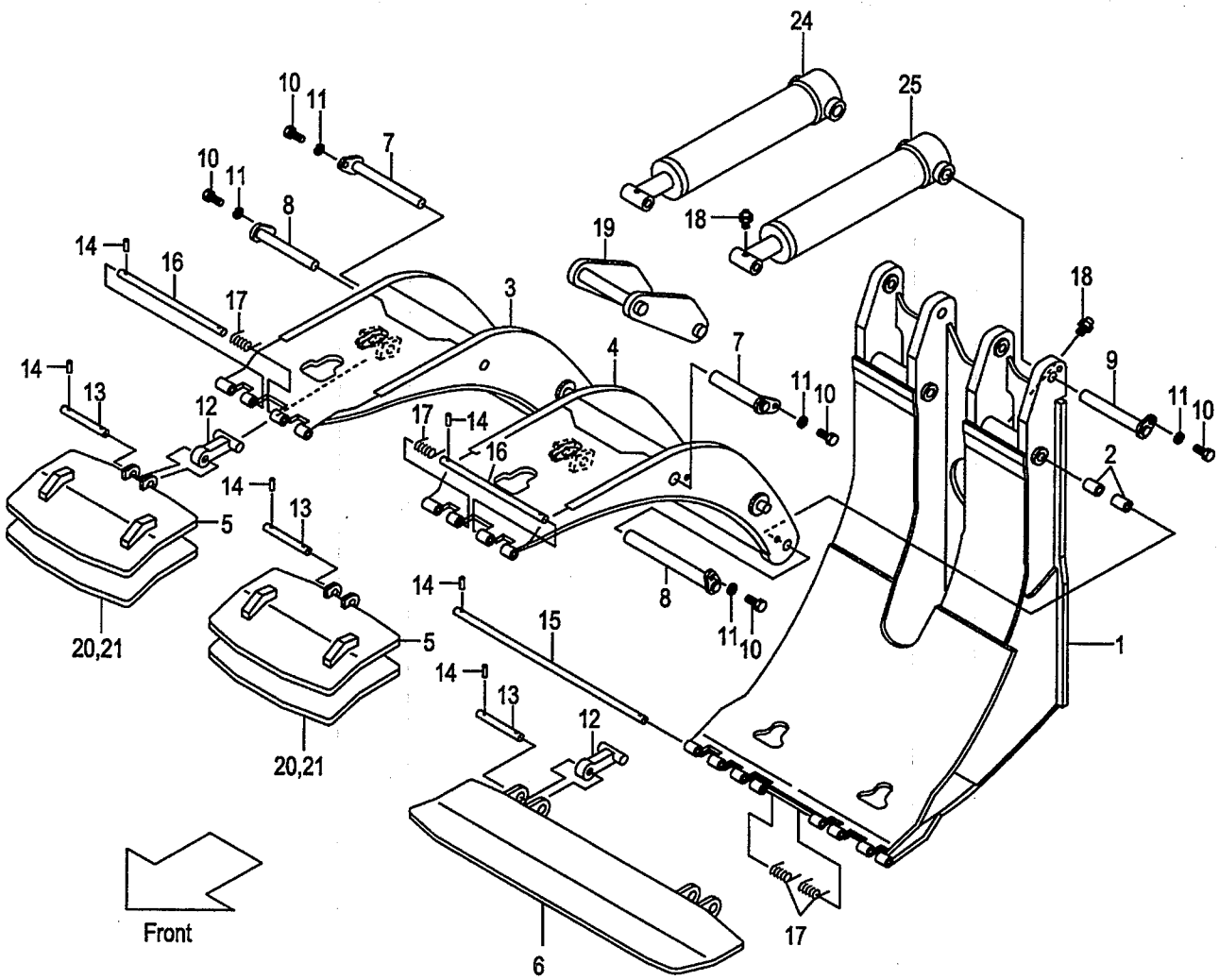

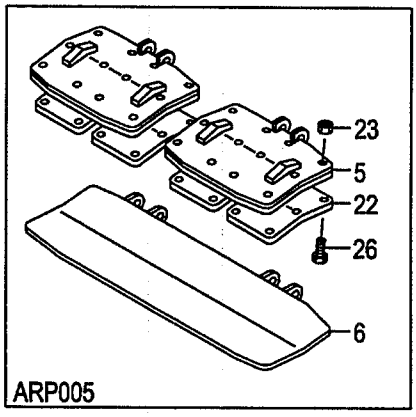

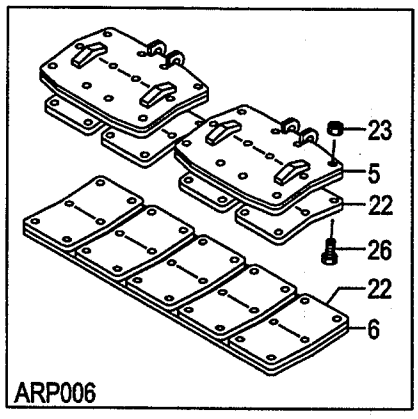

A:PRX2B9(VM/J)
B:PRX2D9(VM/J)
C:PRX2F9(VM/J)

FIG.88
(A502PRM0)

Item No	Part No.	Mark	Description		Req'd	Remarks : Serial No.
31	63110-19761	+	KNOB	ﾉﾌﾞ	1	
32	63110-19961	+	DECAL	ﾃﾞｶﾙ	1	
33	63110-19131	+	KNOB	ﾉﾌﾞ	1	
34	63110-19691	+	KNOB	ﾉﾌﾞ	1	
35	63110-19891	+	DECAL	ﾃﾞｶﾙ	1	
36	214A7-42181	+	KNOB	ﾉﾌﾞ	1	
37	62479-23591	+	COLLAR	ｶﾗｰ	2	
38	04901-00160	+	NIPPLE	ﾆｯﾌﾟﾙ	2	
39	62479-27001	+	DECAL,CAUTION	ﾃﾞｶﾙ	1	
40	27419-12072	+	DECAL,CAUTION	ﾃﾞｶﾙ	2	

FIG.89 CYLINDER [PRX2A9-PRX2F9,PRX3A9-PRX3F9]

(A502PRN0) ｼﾘﾝﾀﾞ

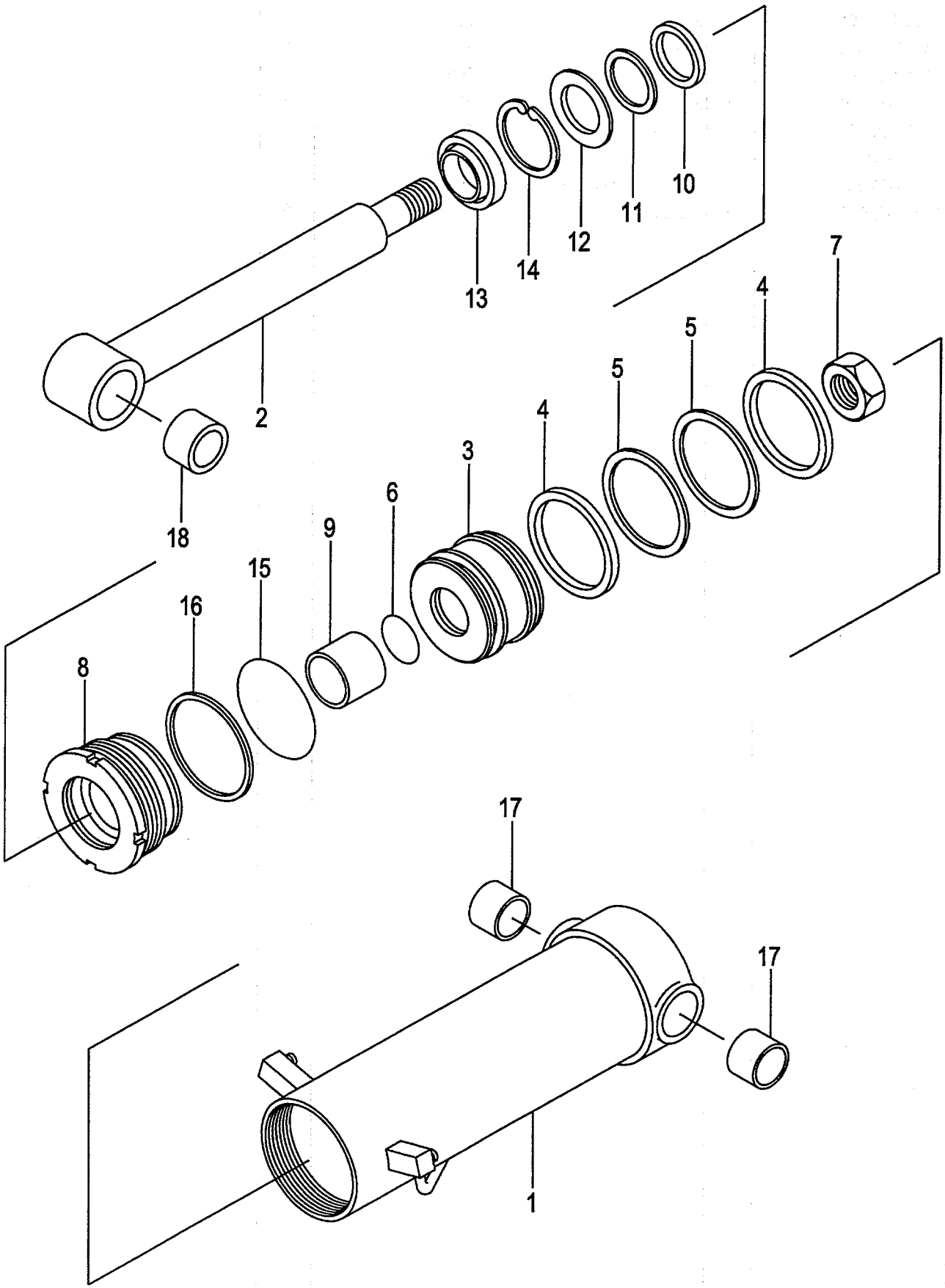

A:PRX2A9(VM/J) PRX3A9(VM/J) D:PRX2D9(VM/J) PRX3D9(VM/J)
B:PRX2B9(VM/J) PRX3B9(VM/J) E:PRX2E9(VM/J) PRX3E9(VM/J)
C:PRX2C9(VM/J) PRX3C9(VM/J) F:PRX2F9(VM/J) PRX3F9(VM/J)

FIG.89
(A502PRN0)

Item No	Part No.	Mark	Description		Req'd	Remarks : Serial No.
A1	62479-20821		CYL-ASSY,RH	ｼﾘﾝﾀﾞｱｯｾﾝ	1	A,B INC.1-18
-	62479-20801		CYL-ASSY,RH	ｼﾘﾝﾀﾞｱｯｾﾝ	1	C,D INC.1-18
-	62479-20841		CYL-ASSY,RH	ｼﾘﾝﾀﾞｱｯｾﾝ	1	E,F INC.1-18
A2	62479-20831		CYL-ASSY,LH	ｼﾘﾝﾀﾞｱｯｾﾝ	1	A,B INC.1-18
-	62479-20811		CYL-ASSY,LH	ｼﾘﾝﾀﾞｱｯｾﾝ	1	C,D INC.1-18
-	62479-20851		CYL-ASSY,LH	ｼﾘﾝﾀﾞｱｯｾﾝ	1	E,F INC.1-18
1	62479-25022		TUBE,RH	ﾁｭｰﾌﾞ	1	A,B
-	62479-25002		TUBE,RH	ﾁｭｰﾌﾞ	1	C,D
-	62479-25042		TUBE,RH	ﾁｭｰﾌﾞ	1	E,F
-	62479-25032		TUBE,LH	ﾁｭｰﾌﾞ	1	A,B
-	62479-25012		TUBE,LH	ﾁｭｰﾌﾞ	1	C,D
-	62479-25052		TUBE,LH	ﾁｭｰﾌﾞ	1	E,F
2	62479-25111		ROD,PISTON	ﾛｯﾄﾞ	2	A,B
-	62479-25101		ROD,PISTON	ﾛｯﾄﾞ	2	C,D
-	62479-25121		ROD,PISTON	ﾛｯﾄﾞ	2	E,F
3	62479-25521		PISTON	ﾋﾟｽﾄﾝ	2	
4	25808-43111		PACKING	ﾊﾟｯｷﾝｸﾞ	4	
5	25808-43121		RING,BACK-UP	ﾘﾝｸﾞ	4	
6	03320-00400		O-RING	Oﾘﾝｸﾞ	2	
7	62479-25541		NUT	ﾅｯﾄ	2	A,B,C,D
-	62479-25251		NUT	ﾅｯﾄ	2	E,F
8	62459-23271		CAP	ｷｬｯﾌﾟ	2	
9	59595-55301		BUSH	ﾌﾞｯｼﾝｸﾞ	2	
10	25958-52201		PACKING	ﾊﾟｯｷﾝｸﾞ	2	
11	25958-52211		RING,BACK-UP	ﾘﾝｸﾞ	2	
12	25958-52221		RETAINER	ﾘﾃｰﾅ	2	
13	24469-42701		SEAL,DUST	ｼｰﾙ	2	
14	02110-00062		RING,SNAP	ｽﾅｯﾌﾟﾘﾝｸﾞ	2	
15	03350-00850		O-RING	Oﾘﾝｸﾞ	2	
16	03370-00850		RING,BACK-UP	ﾘﾝｸﾞ	2	
17	62439-22181		BUSH	ﾌﾞｯｼﾝｸﾞ	4	
18	62479-25601		BUSH	ﾌﾞｯｼﾝｸﾞ	2	

FIG.90 HYDRAULIC LINE (CONNECTOR-CYLINDER & MOTOR)

(A502PRP0) ﾊｲﾄﾞﾛﾘｯｸﾗｲﾝ (ｺﾈｸﾀｰｼﾘﾝﾀﾞｰ&ﾓｰﾀ)

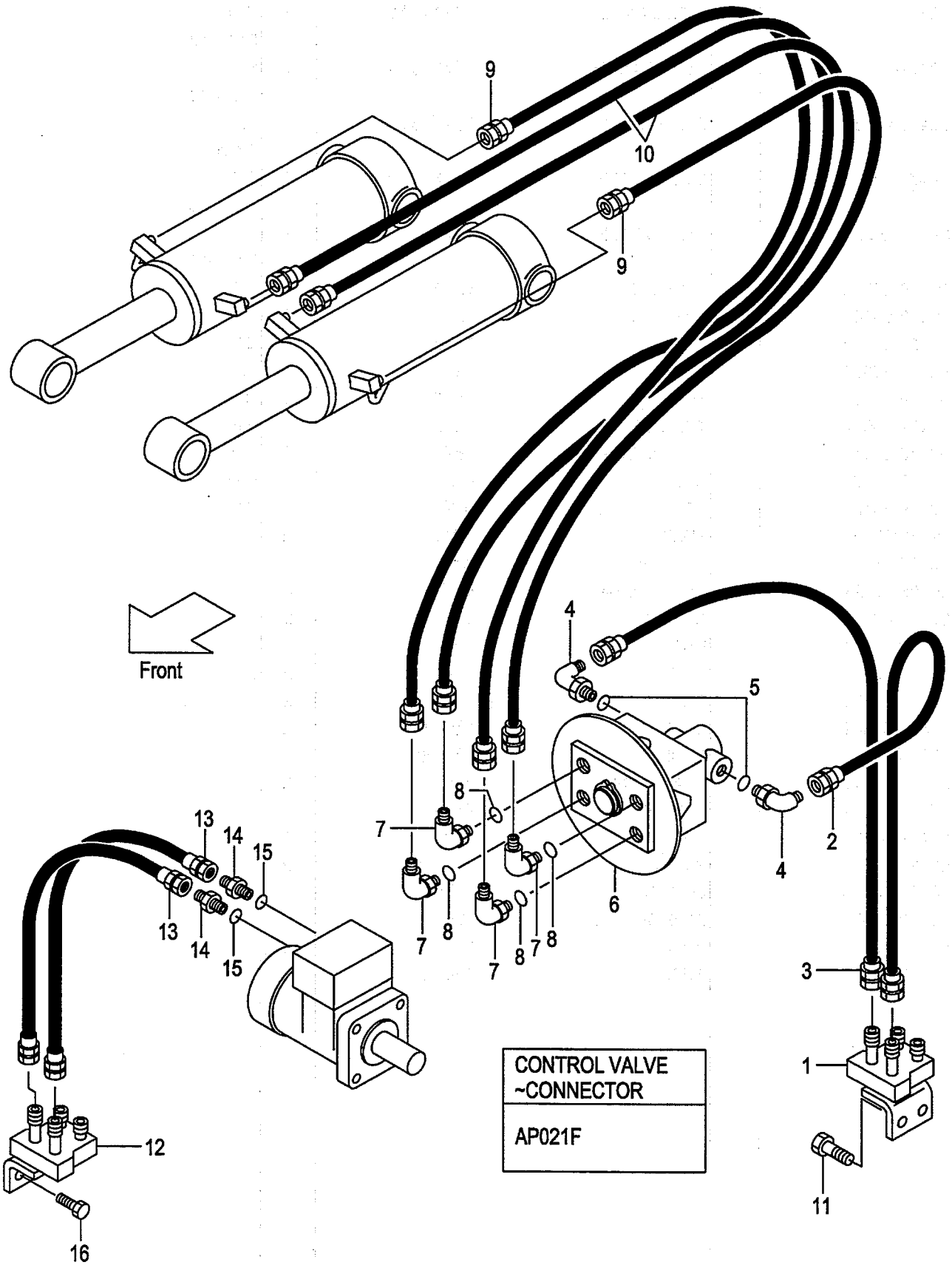

A:PRX2A9(VM/J) D:PRX2D9(VM/J)
B:PRX2B9(VM/J) E:PRX2E9(VM/J)
C:PRX2C9(VM/J) F:PRX2F9(VM/J)

FIG.90
(A502PRP0)

Item No	Part No.	Mark	Description		Req'd	Remarks : Serial No.
1	621F0-12011		STUD	ｽﾀｯﾄﾞ	1	
2	63130-21045		HOSE	ﾎｰｽ	1	
3	63130-21040		HOSE	ﾎｰｽ	1	
4	04150-00303		ELBOW	ｴﾙﾎﾞ	2	
5	03320-00140		O-RING	Oﾘﾝｸﾞ	2	
6	61439-20702		VALVE,ROTARY	ﾊﾞﾙﾌﾞ	1	SEE FIG.91
7	63110-12311		ELBOW	ｴﾙﾎﾞ	4	
8	03320-00140		O-RING	Oﾘﾝｸﾞ	4	
9	63130-31105		HOSE	ﾎｰｽ	2	A,B,E,F
-	63130-31080		HOSE	ﾎｰｽ	2	C,D
10	63130-31100		HOSE	ﾎｰｽ	2	A,B,E,F
-	63130-31075		HOSE	ﾎｰｽ	2	C,D
11	01184-10025		BOLT & WASHER	ﾎﾞﾙﾄ&ﾜｯｼｬ	2	
12	621F0-12001		STUD	ｽﾀｯﾄﾞ	1	
13	63130-21060		HOSE	ﾎｰｽ	2	
14	04134-00303		NIPPLE	ﾆｯﾌﾟﾙ	2	
15	03320-00140		O-RING	Oﾘﾝｸﾞ	2	
16	01184-10025		BOLT & WASHER	ﾎﾞﾙﾄ&ﾜｯｼｬ	2	

FIG.91 ROTARY VALVE [PRX2A9-PRX2F9,PRX3A9-PRX3F9]

(A502PRQ0) ﾛｰﾀﾘﾊﾞﾙﾌﾞ

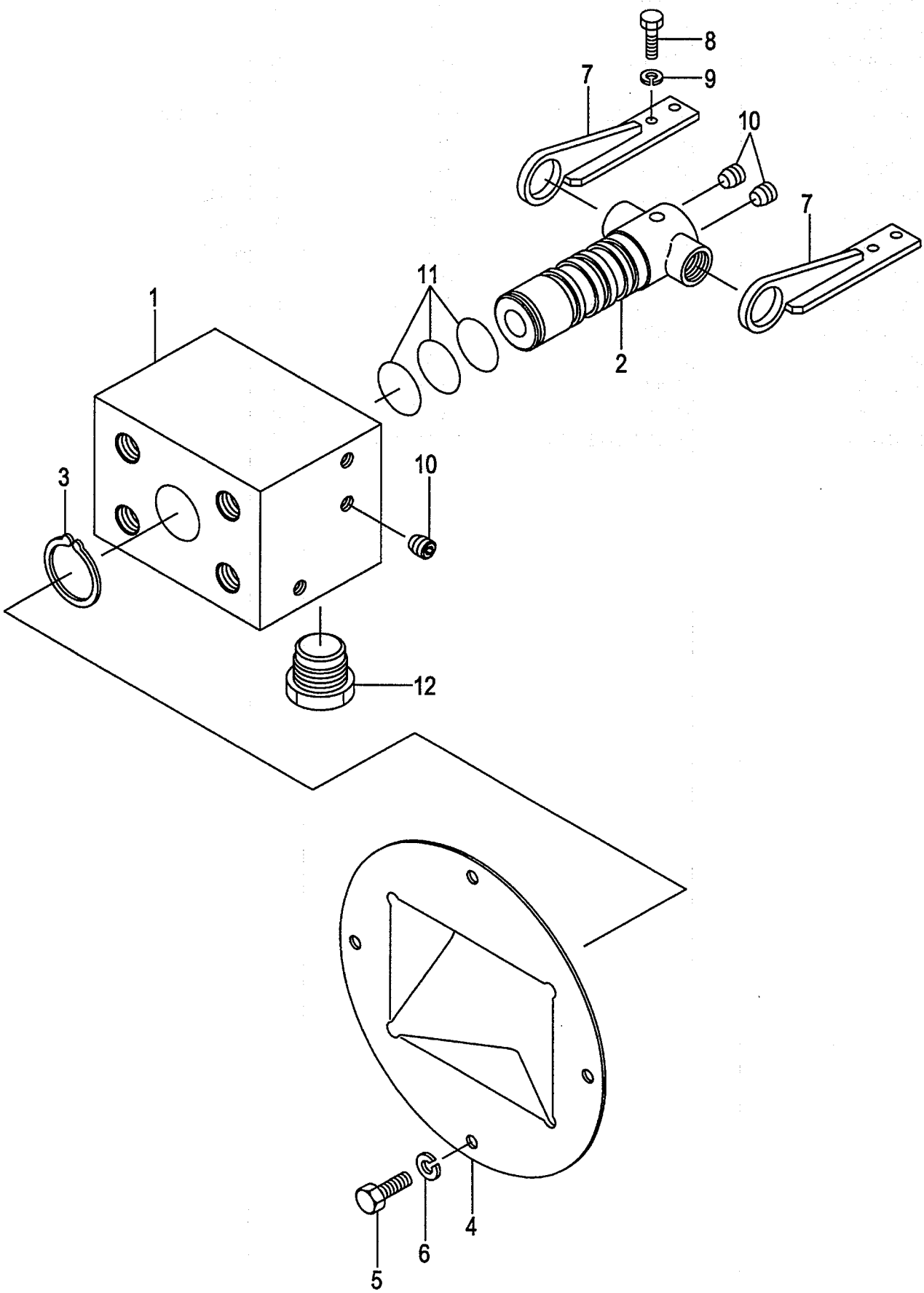

A:PRX2A9(VM/J) PRX2D9(VM/J) PRX3A9(VM/J) PRX3D9(VM/J)
PRX2B9(VM/J) PRX2E9(VM/J) PRX3B9(VM/J) PRX3E9(VM/J)
PRX2C9(VM/J) PRX2F9(VM/J) PRX3C9(VM/J) PRX3F9(VM/J)

FIG.91
(A502PRQ0)

Item No	Part No.	Mark	Description		Req'd	Remarks : Serial No.
A1	61439-20702		VALVE-ASSY,ROTARY	ﾛｰﾀﾘﾊﾞﾙﾌﾞｱｯｾﾝ	1	INC.1-12
1	61439-22602		BODY	ﾎﾞﾃﾞｨ	1	
2	61439-22612		SPOOL	ｽﾌﾟｰﾙ	1	
3	02100-00036		RING,SNAP	ｽﾅｯﾌﾟﾘﾝｸﾞ	1	
4	61439-22641		RETAINER	ﾘﾃｰﾅ	1	
5	01100-08016		BOLT	ﾎﾞﾙﾄ	4	
6	02010-00008		WASHER	ﾜｯｼｬ	4	
7	61439-22651		BRACKET	ﾌﾞﾗｹｯﾄ	2	
8	01100-10025		BOLT	ﾎﾞﾙﾄ	4	
9	02010-00010		WASHER	ﾜｯｼｬ	4	
10	23870-52871		PLUG	ﾌﾟﾗｸﾞ	9	
11	63130-15321		O-RING	Oﾘﾝｸﾞ	3	
12	62439-22832		VALVE,CHECK	ﾊﾞﾙﾌﾞ	1	
13	62479-25901	+	BRACKET	ﾌﾞﾗｹｯﾄ	1	
14	01100-10025	+	BOLT	ﾎﾞﾙﾄ	4	
15	01100-10040	+	BOLT	ﾎﾞﾙﾄ	4	
16	02010-00010	+	WASHER	ﾜｯｼｬ	8	
17	63110-32301	+	RETAINER	ﾘﾃｰﾅ	1	
18	01100-08016	+	BOLT	ﾎﾞﾙﾄ	4	
19	02010-00008	+	WASHER	ﾜｯｼｬ	4	

ROTATING DEVICE

FIG.92 **[PRX2A9,PRX2B9,PRX2C9,PRX2D9,PRX2E9,PRX2F9]**

(A502PRR0) ﾛｰﾃｰﾃｨﾝｸﾞﾃﾞﾊﾞｲｽ

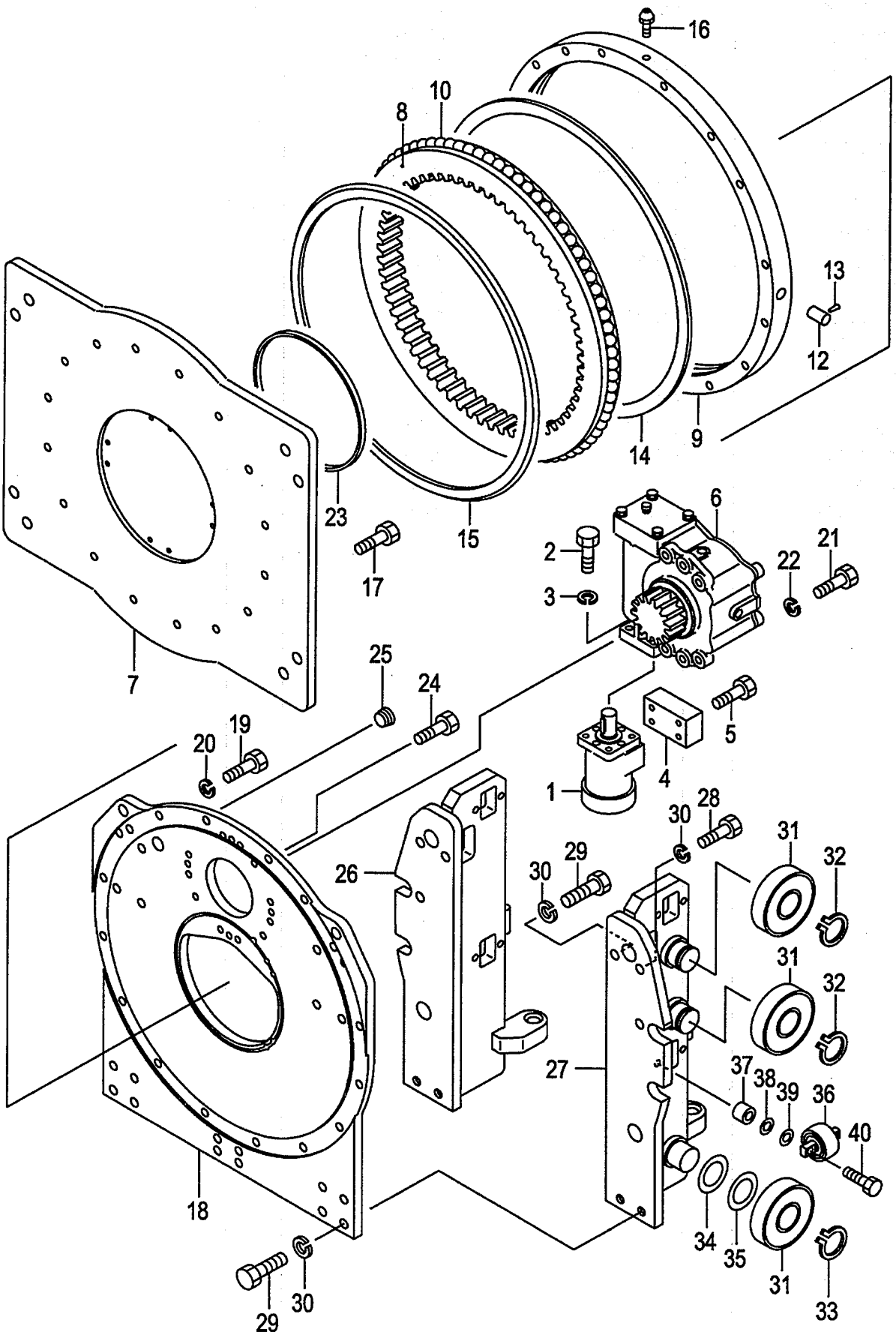

A:PRX2A9(VM/J) D:PRX2D9(VM/J)
B:PRX2B9(VM/J) E:PRX2E9(VM/J)
C:PRX2C9(VM/J) F:PRX2F9(VM/J)

FIG.92
(A502PRR0)

Item No	Part No.	Mark	Description		Req'd	Remarks : Serial No.
1	62059-12802		MOTOR	ﾓｰﾀ	1	
2	01110-10025		BOLT	ﾎﾞﾙﾄ	4	
3	02010-00010		WASHER	ﾜｯｼｬ	4	
4	62159-12702		VALVE,COUNTER-BAL.	ﾊﾞﾙﾌﾞ	1	
5	01100-08045		BOLT	ﾎﾞﾙﾄ	4	
A1	62159-10101		SUB-ASSY,RD		1	INC.6-25
				ﾛｰﾃｰﾃｨﾝｸﾞﾃﾞﾊﾞｲｽｻﾌﾞｱｯｾﾝ		
6	62159-10201		REDUCTION	ﾘﾀﾞｸｼｮﾝ	1	SEE FIG.93
7	62159-12141		PLATE,ROTATING	ﾌﾟﾚｰﾄ	1	
A2	62159-12071		BRG-ASSY,ROTATING		1	INC.8-16
				ﾛｰﾃｰﾃｨﾝｸﾞﾍﾞｱﾘﾝｸﾞｱｯｾﾝ		
8	NO PART NO.		WHEEL,INNER	ﾎｲｰﾙ	1	
9	NO PART NO.		WHEEL,OUTER	ﾎｲｰﾙ	1	
10	03190-00026		BALL	ﾎﾞｰﾙ	77	
11	NO PART NO.	+	SPACER	ｽﾍﾟｰｻ	77	
12	NO PART NO.		CAP	ｷｬｯﾌﾟ	1	
13	NO PART NO.		PIN	ﾋﾟﾝ	1	
14	62159-12261		SEAL	ｼｰﾙ	1	
15	62159-12271		SEAL	ｼｰﾙ	1	
16	04901-00100		FITTING	ﾌｨｯﾃｨﾝｸﾞ	1	
17	01170-14045		BOLT	ﾎﾞﾙﾄ	16	
18	62159-12132		PLATE,BASE	ﾌﾟﾚｰﾄ	1	
19	01103-14045		BOLT	ﾎﾞﾙﾄ	14	
20	02011-00014		WASHER	ﾜｯｼｬ	14	
21	01103-12035		BOLT	ﾎﾞﾙﾄ	6	
22	02011-00012		WASHER	ﾜｯｼｬ	6	
23	62159-12231		FELT	ﾌｪﾙﾄ	1	
24	01170-14030		BOLT	ﾎﾞﾙﾄ	2	
25	25073-00031		PLUG	ﾌﾟﾗｸﾞ	1	
26	62179-10101		BRACKET,LIFT,RH	ﾌﾞﾗｹｯﾄ	1	
27	62179-10111		BRACKET,LIFT,LH	ﾌﾞﾗｹｯﾄ	1	
28	01103-16030		BOLT	ﾎﾞﾙﾄ	4	
29	01103-16040		BOLT	ﾎﾞﾙﾄ	6	
30	02011-00016		WASHER	ﾜｯｼｬ	10	
31	277P8-22051		ROLLER,END,SMALL	ﾛｰﾗ	6	
-	277P8-22061		ROLLER,END,LARGE	ﾛｰﾗ	(4)	
32	02100-00045		RING,SNAP	ｽﾅｯﾌﾟﾘﾝｸﾞ	4	
33	09192-30044		RING,SNAP	ｽﾅｯﾌﾟﾘﾝｸﾞ	2	
34	277P8-22071		SHIM,T-0.5	ｼﾑ	10	
35	277P8-22081		SHIM,T-1.0	ｼﾑ	10	
36	23458-32052		ROLLER,SIDE	ﾛｰﾗ	4	
37	22548-34031		SPACER	ｽﾍﾟｰｻ	8	
38	22548-34051		SHIM	ｼﾑ	10	
39	22548-34061		SHIM	ｼﾑ	10	
40	01184-12050		BOLT & WASHER	ﾎﾞﾙﾄ&ﾜｯｼｬ	8	

FIG.93 REDUCTION [PRX2A9-PRX2F9,PRX3A9-PRX3F9]

(A502PRS0) ﾘﾀﾞｸｼｮﾝ

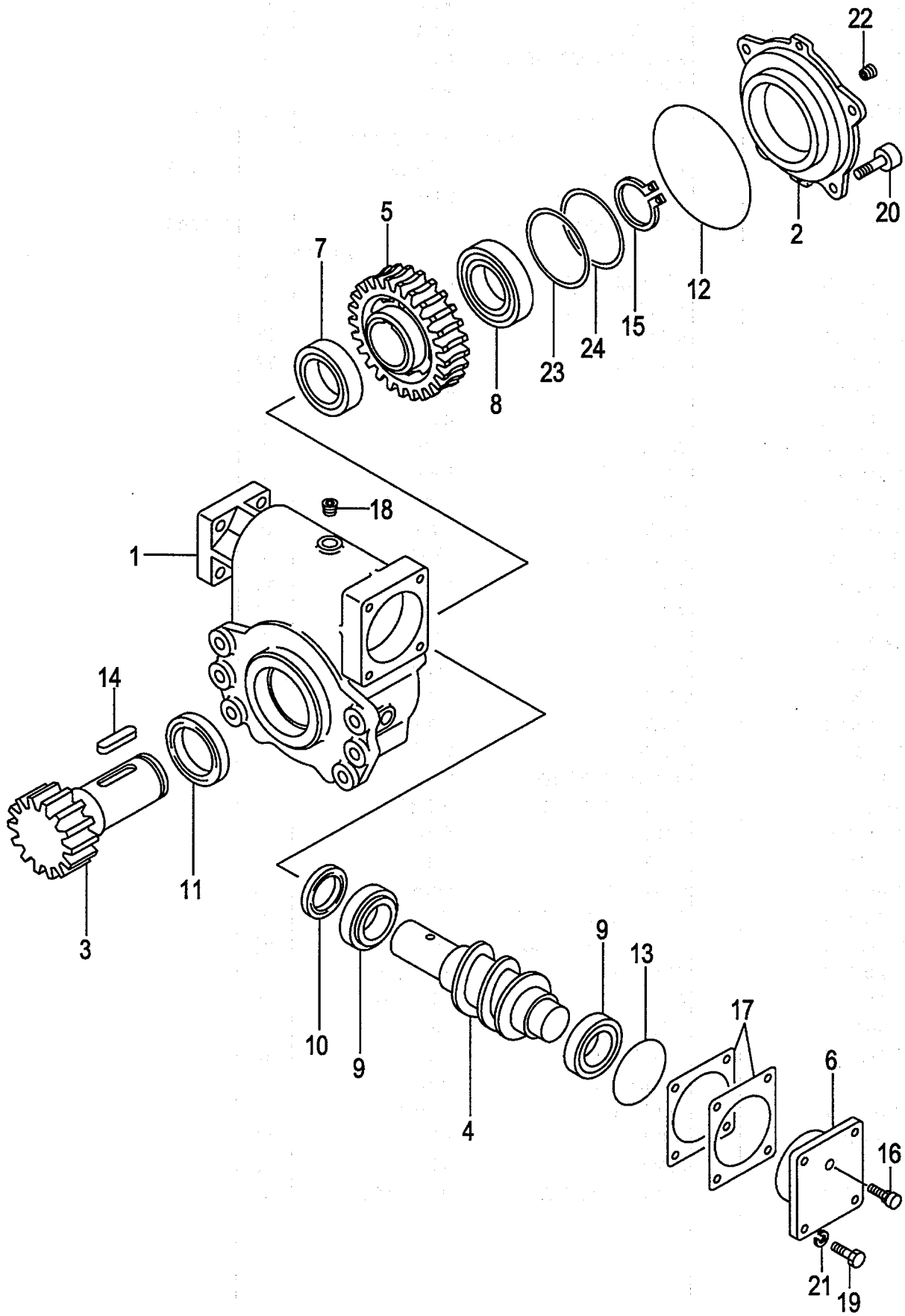

A:PRX2A9(VM/J) PRX2D9(VM/J) PRX3A9(VM/J) PRX3D9(VM/J)
PRX2B9(VM/J) PRX2E9(VM/J) PRX3B9(VM/J) PRX3E9(VM/J)
PRX2C9(VM/J) PRX2F9(VM/J) PRX3C9(VM/J) PRX3F9(VM/J)

FIG.93
(A502PRS0)

Item No	Part No.	Mark	Description		Req'd	Remarks : Serial No.
A1	62159-10201		REDUCTION-ASSY	ﾘﾀﾞｸｼｮﾝｱｯｾﾝ	1	INC.1-25
1	62159-12082		CASE	ｹｰｽ	1	
2	62159-12111		COVER	ｶﾊﾞｰ	1	
3	62159-12061		SHAFT	ｼｬﾌﾄ	1	
4	62159-12021		WORM	ﾜｰﾑ	1	
5	62159-12031		WHEEL,WORM	ﾎｲｰﾙ	1	
6	62159-12101		CAP	ｷｬｯﾌﾟ	1	
7	03006-00210		BRG	ﾍﾞｱﾘﾝｸﾞ	1	
8	03000-06210		BRG	ﾍﾞｱﾘﾝｸﾞ	1	
9	03071-32008		BRG	ﾍﾞｱﾘﾝｸﾞ	2	
10	62159-12221		SEAL,OIL	ｼｰﾙ	1	
11	62159-12231		SEAL,OIL	ｼｰﾙ	1	
12	03310-01400		O-RING	Oﾘﾝｸﾞ	1	
13	03310-00750		O-RING	Oﾘﾝｸﾞ	1	
14	62159-12211		KEY	ｷｰ	2	
15	02100-00050		RING,SNAP	ｽﾅｯﾌﾟﾘﾝｸﾞ	1	
16	90106-65690		BREATHER,AIR	ﾌﾞﾘｰｻﾞ	1	
17	62159-12201		SHIM	ｼﾑ	AR	
18	24329-45541		PLUG	ﾌﾟﾗｸﾞ	4	
19	01106-10025		BOLT	ﾎﾞﾙﾄ	4	
20	62159-12241		BOLT	ﾎﾞﾙﾄ	4	
21	02011-00010		WASHER	ﾜｯｼｬ	4	
22	22518-40151		PLUG	ﾌﾟﾗｸﾞ	1	
23	62159-12551		SHIM	ｼﾑ	AR	
24	62159-12561		SHIM	ｼﾑ	AR	
25	23870-52871	+	PLUG	ﾌﾟﾗｸﾞ	1	

FIG.94 ROTATING CLAMP [PRX3A9,PRX3C9,PRX3E9]

(A502PRT0) ローテーティング゛クランプ゜

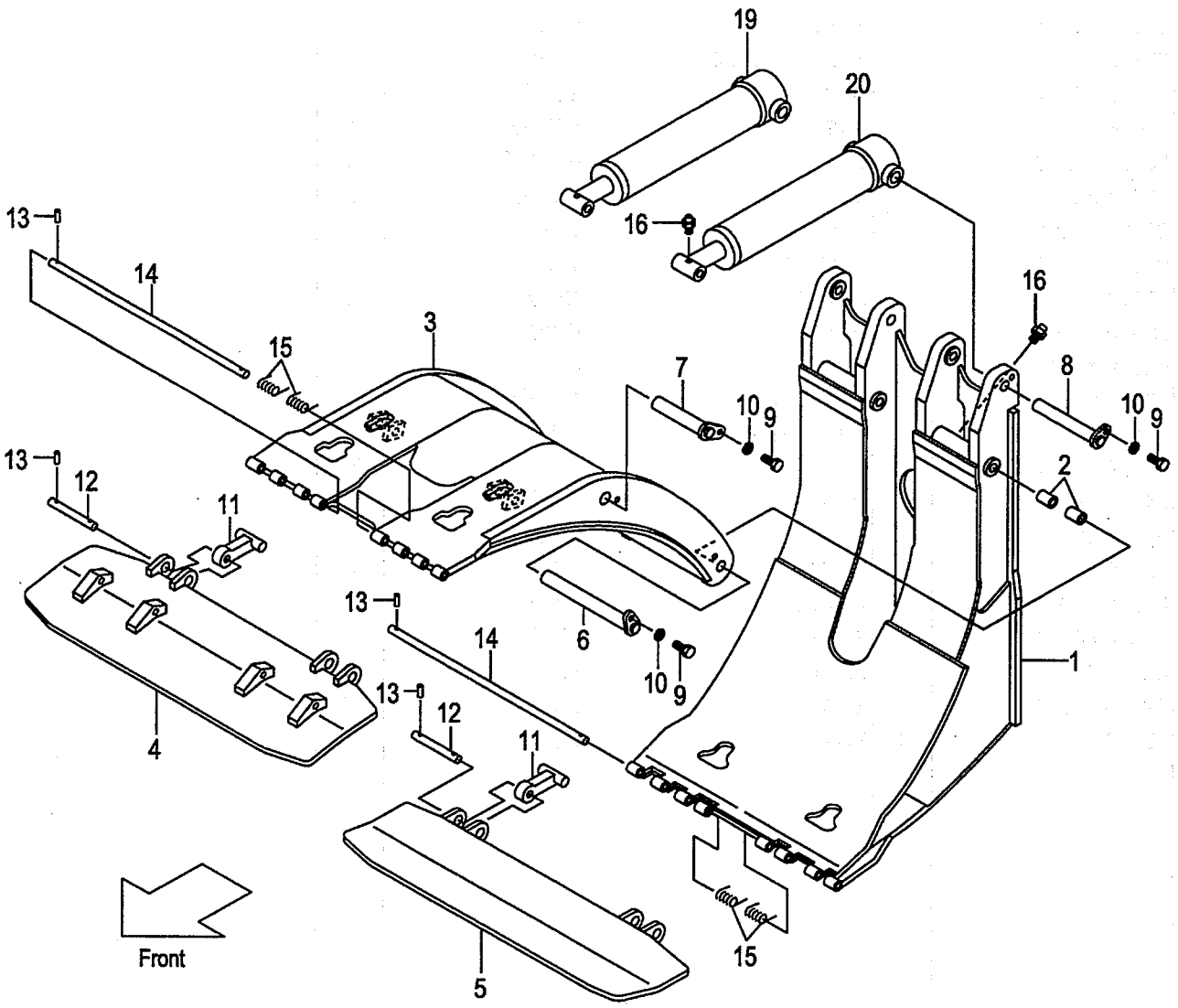

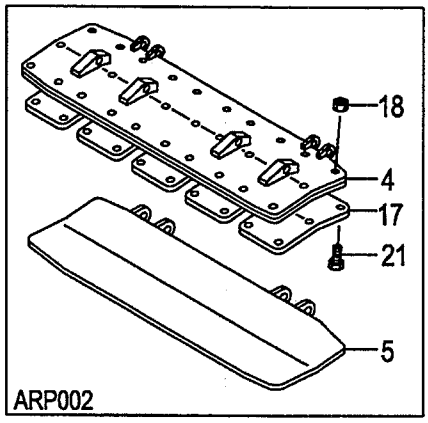

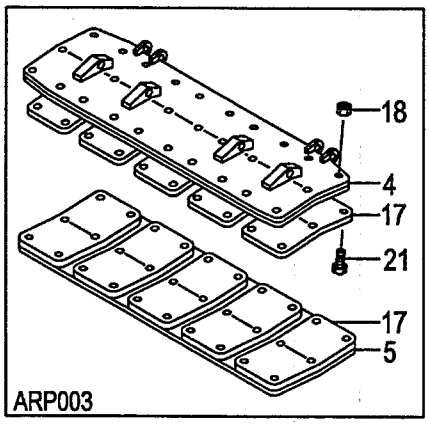

A:PRX3A9(VM/J)
B:PRX3C9(VM/J)
C:PRX3E9(VM/J)

FIG.94
(A502PRT0)

Item No	Part No.	Mark	Description		Req'd	Remarks : Serial No.
A1	62A79-20101		CLAMP-ASSY,ROTATING		1	A
				ﾛｰﾃｰﾃｨﾝｸﾞｸﾗﾝﾌﾟｱｯｾﾝ		INC.1-3,6-16,33,34 & FIG.97
-	62C79-20101		CLAMP-ASSY,ROTATING		1	B
				ﾛｰﾃｰﾃｨﾝｸﾞｸﾗﾝﾌﾟｱｯｾﾝ		INC.1-3,6-16,33,34 & FIG.97
-	62E79-20101		CLAMP-ASSY,ROTATING		1	C
				ﾛｰﾃｰﾃｨﾝｸﾞｸﾗﾝﾌﾟｱｯｾﾝ		INC.1-3,6-16,33,34 & FIG.97
A2	62A79-20202		SUB-ASSY,RC		1	A
				ﾛｰﾃｰﾃｨﾝｸﾞｸﾗﾝﾌﾟｻﾌﾞｱｯｾﾝ		INC.1-3,6-16,33,34
-	62C79-20202		SUB-ASSY,RC		1	B
				ﾛｰﾃｰﾃｨﾝｸﾞｸﾗﾝﾌﾟｻﾌﾞｱｯｾﾝ		INC.1-3,6-16,33,34
-	62E79-20202		SUB-ASSY,RC		1	C
				ﾛｰﾃｰﾃｨﾝｸﾞｸﾗﾝﾌﾟｻﾌﾞｱｯｾﾝ		INC.1-3,6-16,33,34
1	62479-20312		FRAME	ﾌﾚｰﾑ	1	A
-	62479-20302		FRAME	ﾌﾚｰﾑ	1	B
-	62479-20322		FRAME	ﾌﾚｰﾑ	1	C
2	62439-22181		BUSH	ﾌﾞｯｼﾝｸﾞ	4	
3	62479-20471		ARM,LONG	ｱｰﾑ	1	A
-	62479-20461		ARM,LONG	ｱｰﾑ	1	B
-	62479-20481		ARM,LONG	ｱｰﾑ	1	C
4	62479-20611		PAD,UPPER	ﾊﾟｯﾄﾞ	1	
-	62479-20611		PAD,UPPER	ﾊﾟｯﾄﾞ	1	[ARP001]
-	62479-20641		PAD,UPPER	ﾊﾟｯﾄﾞ	1	[ARP002]
-	62479-20641		PAD,UPPER	ﾊﾟｯﾄﾞ	1	[ARP003]
5	62479-20601		PAD,LOWER	ﾊﾟｯﾄﾞ	1	
-	62479-20601		PAD,LOWER	ﾊﾟｯﾄﾞ	1	[ARP001]
-	62479-20601		PAD,LOWER	ﾊﾟｯﾄﾞ	1	[ARP002]
-	62479-20631		PAD,LOWER	ﾊﾟｯﾄﾞ	1	[ARP003]
6	62479-23861		PIN	ﾋﾟﾝ	2	
7	62479-23801		PIN	ﾋﾟﾝ	2	
8	62479-23821		PIN	ﾋﾟﾝ	2	
9	01100-12020		BOLT	ﾎﾞﾙﾄ	6	
10	02010-00012		WASHER	ﾜｯｼｬ	6	
11	62479-23901		STOPPER	ｽﾄｯﾊﾟ	4	
12	62479-24921		SHAFT	ｼｬﾌﾄ	4	
13	02270-04020		PIN	ﾋﾟﾝ	12	
14	62479-24901		SHAFT	ｼｬﾌﾄ	2	
15	62479-24951		SPRING	ｽﾌﾟﾘﾝｸﾞ	4	
16	214A8-52051		FITTING	ﾌｨｯﾃｨﾝｸﾞ	4	
17	62479-24502		RUBBER	ﾗﾊﾞｰ	5	[ARP002]
-	62479-24502		RUBBER	ﾗﾊﾞｰ	10	[ARP003]
18	01400-00010		NUT	ﾅｯﾄ	30	[ARP002]
-	01400-00010		NUT	ﾅｯﾄ	60	[ARP003]
19	62479-20821		CYL,RH	ｼﾘﾝﾀﾞ	1	A
						SEE FIG.89
-	62479-20801		CYL,RH	ｼﾘﾝﾀﾞ	1	B
						SEE FIG.89
-	62479-20841		CYL,RH	ｼﾘﾝﾀﾞ	1	C
						SEE FIG.89
20	62479-20831		CYL,LH	ｼﾘﾝﾀﾞ	1	A
						SEE FIG.89

FIG.94 ROTATING CLAMP [PRX3A9,PRX3C9,PRX3E9]

(A502PRT0) ローテーティング゛クランプ゜

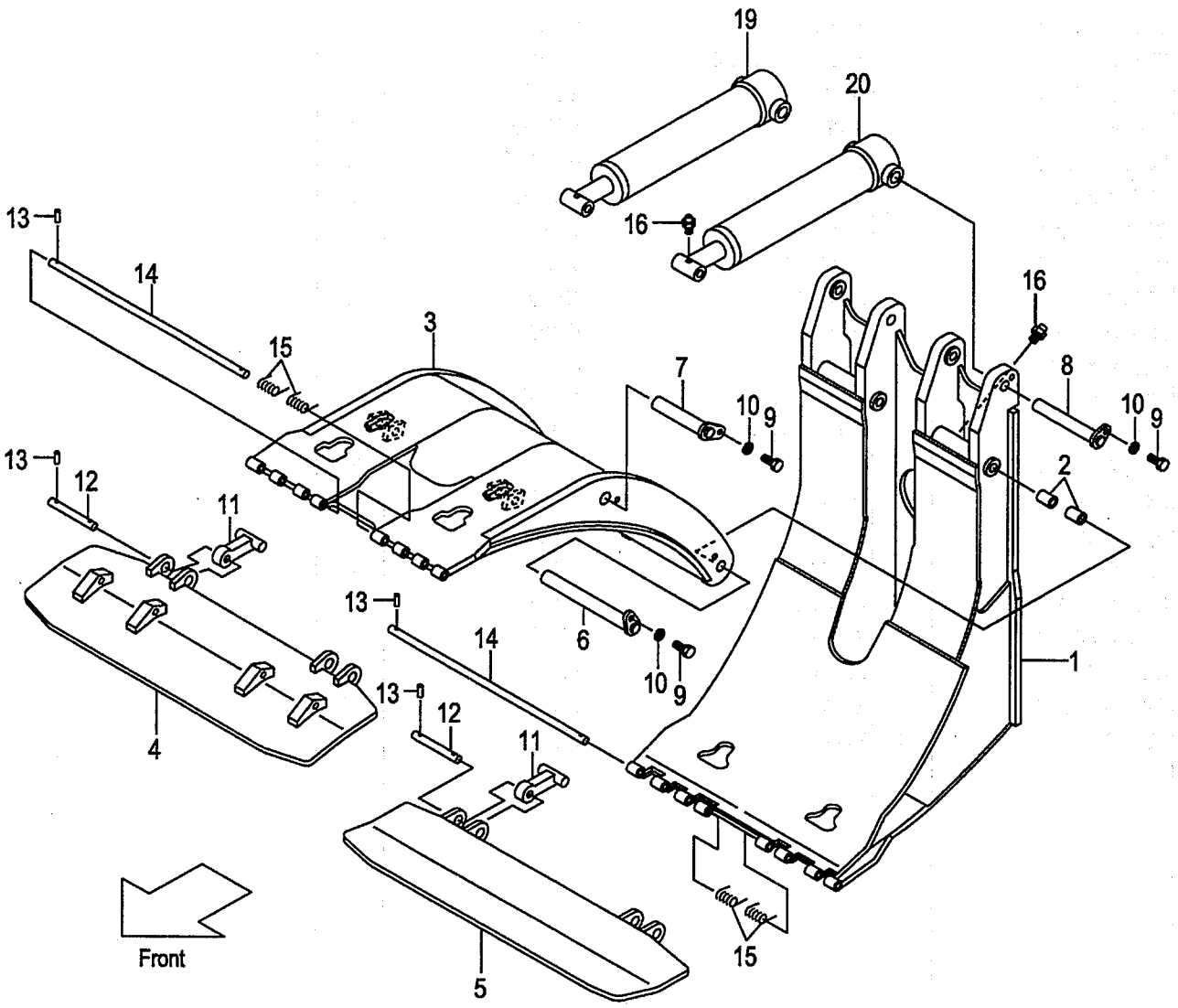

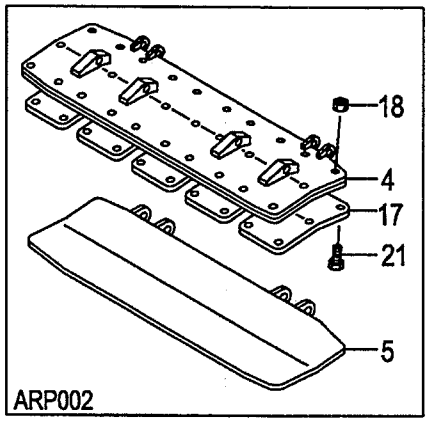

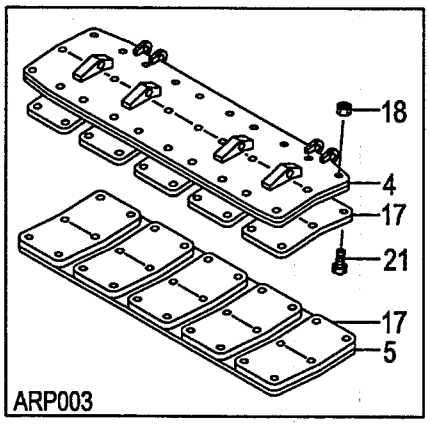

A:PRX3A9(VM/J)
B:PRX3C9(VM/J)
C:PRX3E9(VM/J)

FIG.94
(A502PRT0)

Item No	Part No.	Mark	Description		Req'd	Remarks : Serial No.
-	62479-20811		CYL,LH	ｼﾘﾝﾀﾞ	1	B
						SEE FIG.89
-	62479-20851		CYL,LH	ｼﾘﾝﾀﾞ	1	C
						SEE FIG.89
21	01120-10014		BOLT	ﾎﾞﾙﾄ	30	[ARP002]
-	01120-10014		BOLT	ﾎﾞﾙﾄ	60	[ARP003]
22	63110-18901	+	CHART,LOAD	ﾁｬｰﾄ	1	
-	514A3-82301	+	CHART,LOAD	ﾁｬｰﾄ	1	[EXB/ENGLISH][EXC/ENGLISH]
-	514A3-82301	+	CHART,LOAD	ﾁｬｰﾄ	1	[EXE/ENGLISH][EXN/ENGLISH]
-	63110-18911	+	CHART,LOAD	ﾁｬｰﾄ	1	[EXA/ENGLISH]
-	524T3-84031	+	CHART,LOAD	ﾁｬｰﾄ	1	(RUSSIAN)
-	63110-18921	+	CHART,LOAD	ﾁｬｰﾄ	1	(CHINESE)
-	514A3-82321	+	CHART,LOAD	ﾁｬｰﾄ	1	(GERMAN)
-	514A3-82341	+	CHART,LOAD	ﾁｬｰﾄ	1	(FRENCH)
-	514A3-82331	+	CHART,LOAD	ﾁｬｰﾄ	1	(SPANISH)
-	514A3-82361	+	CHART,LOAD	ﾁｬｰﾄ	1	(DANISH)
-	514A3-82381	+	CHART,LOAD	ﾁｬｰﾄ	1	(GREEK)
-	514A3-82371	+	CHART,LOAD	ﾁｬｰﾄ	1	(ITALIAN)
-	514A3-82351	+	CHART,LOAD	ﾁｬｰﾄ	1	(DUTCH)
-	514A3-82391	+	CHART,LOAD	ﾁｬｰﾄ	1	(PORTUGUESE)
23	02432-01008	+	RIVET	ﾘﾍﾞｯﾄ	4	
24	09210-10300	+	PLATE,NAME	ﾌﾟﾚｰﾄ	1	
-	09210-10300	+	PLATE,NAME	ﾌﾟﾚｰﾄ	1	(ENGLISH)
-	63110-32111	+	PLATE,NAME	ﾌﾟﾚｰﾄ	1	(RUSSIAN)
-	09201-06201	+	PLATE,NAME	ﾌﾟﾚｰﾄ	1	(CHINESE)
-	63110-19211	+	PLATE,NAME	ﾌﾟﾚｰﾄ	1	(GERMAN)
-	63110-19251	+	PLATE,NAME	ﾌﾟﾚｰﾄ	1	(FRENCH)
-	63110-19231	+	PLATE,NAME	ﾌﾟﾚｰﾄ	1	(SPANISH)
-	63110-19291	+	PLATE,NAME	ﾌﾟﾚｰﾄ	1	(DANISH)
-	63110-19331	+	PLATE,NAME	ﾌﾟﾚｰﾄ	1	(GREEK)
-	63110-19311	+	PLATE,NAME	ﾌﾟﾚｰﾄ	1	(ITALIAN)
-	63110-19271	+	PLATE,NAME	ﾌﾟﾚｰﾄ	1	(DUTCH)
-	63110-19351	+	PLATE,NAME	ﾌﾟﾚｰﾄ	1	(PORTUGUESE)
25	63110-18521	+	PLATE,CAUTION	ﾌﾟﾚｰﾄ	1	(ENGLISH)
-	63110-32121	+	PLATE,CAUTION	ﾌﾟﾚｰﾄ	1	(RUSSIAN)
-	63110-18511	+	PLATE,CAUTION	ﾌﾟﾚｰﾄ	1	(CHINESE)
-	63110-19371	+	PLATE,CAUTION	ﾌﾟﾚｰﾄ	1	(GERMAN)
-	63110-19391	+	PLATE,CAUTION	ﾌﾟﾚｰﾄ	1	(FRENCH)
-	63110-19411	+	PLATE,CAUTION	ﾌﾟﾚｰﾄ	1	(SPANISH)
-	63110-19381	+	PLATE,CAUTION	ﾌﾟﾚｰﾄ	1	(DANISH)
-	63110-19441	+	PLATE,CAUTION	ﾌﾟﾚｰﾄ	1	(GREEK)
-	63110-19431	+	PLATE,CAUTION	ﾌﾟﾚｰﾄ	1	(ITALIAN)
-	63110-19401	+	PLATE,CAUTION	ﾌﾟﾚｰﾄ	1	(DUTCH)
-	63110-19421	+	PLATE,CAUTION	ﾌﾟﾚｰﾄ	1	(PORTUGUESE)
26	63110-19761	+	KNOB	ﾉﾌﾞ	1	
27	63110-19961	+	DECAL	ﾃﾞｶﾙ	1	
28	63110-19131	+	KNOB	ﾉﾌﾞ	1	
29	63110-19691	+	KNOB	ﾉﾌﾞ	1	
30	63110-19891	+	DECAL	ﾃﾞｶﾙ	1	
31	214A7-42181	+	KNOB	ﾉﾌﾞ	1	

FIG.94 ROTATING CLAMP [PRX3A9,PRX3C9,PRX3E9]

(A502PRT0) ローテーティング゛クランプ゜

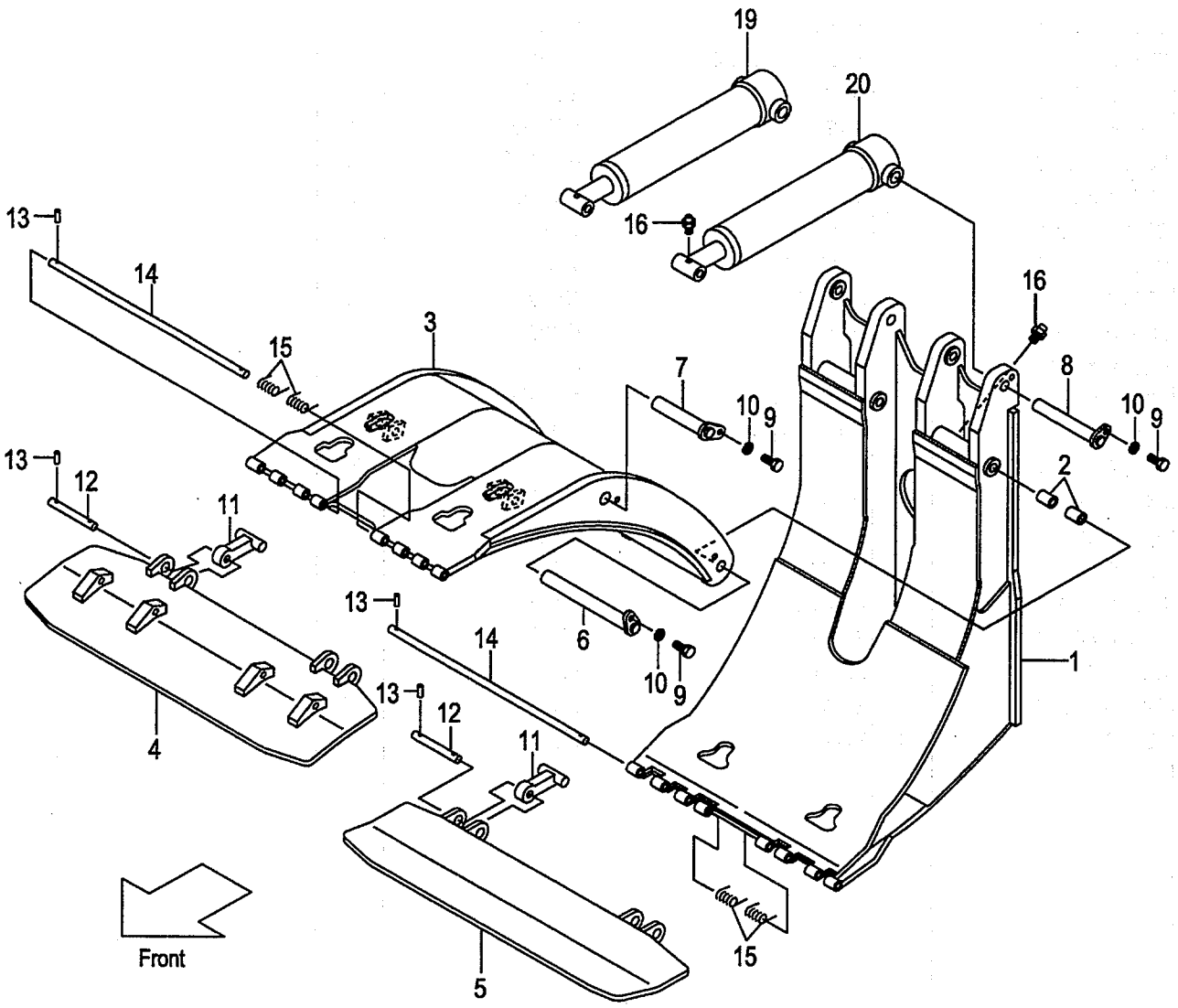

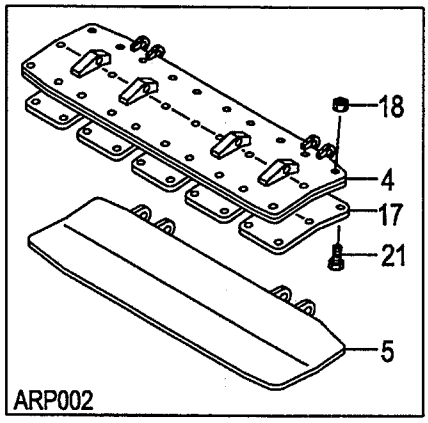

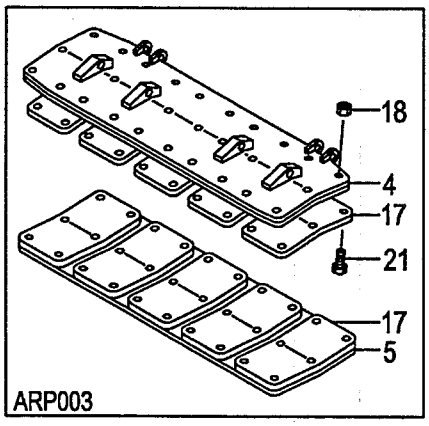

A:PRX3A9(VM/J)
B:PRX3C9(VM/J)
C:PRX3E9(VM/J)

FIG.94
(A502PRT0)

Item No	Part No.	Mark	Description		Req'd	Remarks : Serial No.
32	62479-23591	+	COLLAR	ｶﾗｰ	2	
33	04901-00160	+	NIPPLE	ﾆｯﾌﾟﾙ	2	
34	62479-27001	+	DECAL,CAUTION	ﾃﾞｶﾙ	1	
35	27419-12072	+	DECAL,CAUTION	ﾃﾞｶﾙ	2	

FIG.95 ROTATING CLAMP [PRX3B9,PRX3D9,PRX3F9]

(A502PRU0) ローテーティング゛クランプ゜

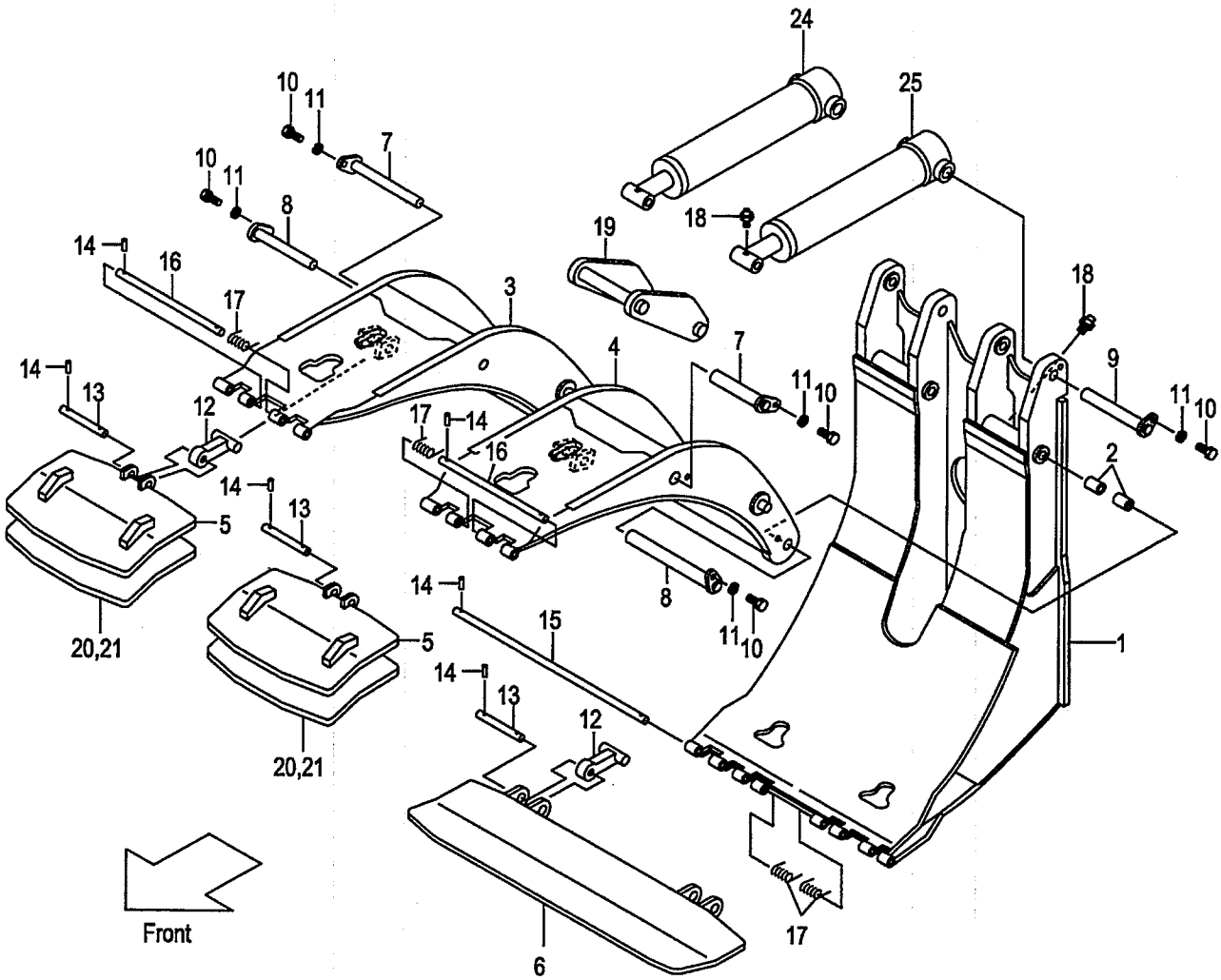

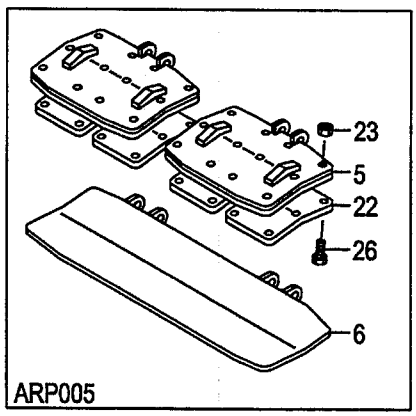

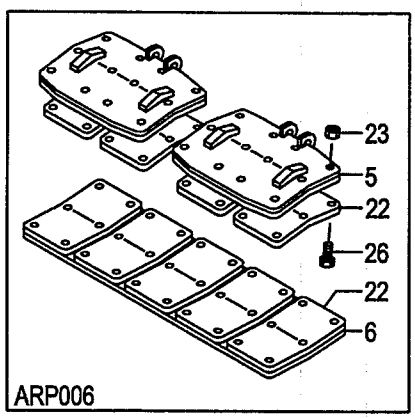

A:PRX3B9(VM/J)
B:PRX3D9(VM/J)
C:PRX3F9(VM/J)

FIG.95
(A502PRU0)

Item No	Part No.	Mark	Description		Req'd	Remarks : Serial No.
A1	62B79-20101		CLAMP-ASSY,ROTATING		1	A
				ﾛｰﾃｰﾃｨﾝｸﾞｸﾗﾝﾌﾟｱｯｾﾝ		INC.1-3,6-21,38,39 & FIG.97
-	62D79-20101		CLAMP-ASSY,ROTATING		1	B
				ﾛｰﾃｰﾃｨﾝｸﾞｸﾗﾝﾌﾟｱｯｾﾝ		INC.1-3,6-21,38,39 & FIG.97
-	62F79-20101		CLAMP-ASSY,ROTATING		1	C
				ﾛｰﾃｰﾃｨﾝｸﾞｸﾗﾝﾌﾟｱｯｾﾝ		INC.1-3,6-21,38,39 & FIG.97
A2	62B79-20202		SUB-ASSY,RC		1	A
				ﾛｰﾃｰﾃｨﾝｸﾞｸﾗﾝﾌﾟｻﾌﾞｱｯｾﾝ		INC.1-3,6-21,38,39
-	62D79-20202		SUB-ASSY,RC		1	B
				ﾛｰﾃｰﾃｨﾝｸﾞｸﾗﾝﾌﾟｻﾌﾞｱｯｾﾝ		INC.1-3,6-21,38,39
-	62F79-20202		SUB-ASSY,RC		1	C
				ﾛｰﾃｰﾃｨﾝｸﾞｸﾗﾝﾌﾟｻﾌﾞｱｯｾﾝ		INC.1-3,6-21,38,39
1	62479-20312		FRAME	ﾌﾚｰﾑ	1	A
-	62479-20302		FRAME	ﾌﾚｰﾑ	1	B
-	62479-20322		FRAME	ﾌﾚｰﾑ	1	C
2	62439-22181		BUSH	ﾌﾞｯｼﾝｸﾞ	4	
3	62479-20421		ARM,LONG,RH	ｱｰﾑ	1	A
-	62479-20401		ARM,LONG,RH	ｱｰﾑ	1	B
-	62479-20441		ARM,LONG,RH	ｱｰﾑ	1	C
4	62479-20431		ARM,LONG,LH	ｱｰﾑ	1	A
-	62479-20411		ARM,LONG,LH	ｱｰﾑ	1	B
-	62479-20451		ARM,LONG,LH	ｱｰﾑ	1	C
5	62479-20621		PAD,UPPER	ﾊﾟｯﾄﾞ	2	
-	62479-20621		PAD,UPPER	ﾊﾟｯﾄﾞ	2	[ARP004]
-	62479-20651		PAD,UPPER	ﾊﾟｯﾄﾞ	2	[ARP005][ARP006]
6	62479-20601		PAD,LOWER	ﾊﾟｯﾄﾞ	1	
-	62479-20601		PAD,LOWER	ﾊﾟｯﾄﾞ	1	[ARP004][ARP005]
-	62479-20631		PAD,LOWER	ﾊﾟｯﾄﾞ	1	[ARP006]
7	62479-23841		PIN	ﾋﾟﾝ	2	
8	62479-23801		PIN	ﾋﾟﾝ	2	
9	62479-23821		PIN	ﾋﾟﾝ	2	
10	01100-12020		BOLT	ﾎﾞﾙﾄ	6	
11	02010-00012		WASHER	ﾜｯｼｬ	6	
12	62479-23901		STOPPER	ｽﾄｯﾊﾟ	4	
13	62479-24921		SHAFT	ｼｬﾌﾄ	4	
14	02270-04020		PIN	ﾋﾟﾝ	14	
15	62479-24901		SHAFT	ｼｬﾌﾄ	1	
16	62479-24911		SHAFT	ｼｬﾌﾄ	2	
17	62479-24951		SPRING	ｽﾌﾟﾘﾝｸﾞ	4	
18	214A8-52051		FITTING	ﾌｨｯﾃｨﾝｸﾞ	4	
19	62479-23701		LINK	ﾘﾝｸ	1	
20	62479-23751		RUBBER	ﾗﾊﾞｰ	2	
21	214A8-42661		BOLT	ﾎﾞﾙﾄ	2	
22	62479-24502		RUBBER	ﾗﾊﾞｰ	4	[ARP005]
-	62479-24502		RUBBER	ﾗﾊﾞｰ	9	[ARP006]
23	01400-00010		NUT	ﾅｯﾄ	24	[ARP005]
-	01400-00010		NUT	ﾅｯﾄ	54	[ARP006]
24	62479-20821		CYL,RH	ｼﾘﾝﾀﾞ	1	A
						SEE FIG.89

FIG.95 ROTATING CLAMP [PRX3B9,PRX3D9,PRX3F9]

(A502PRU0) ローテーティング゛クランプ゜

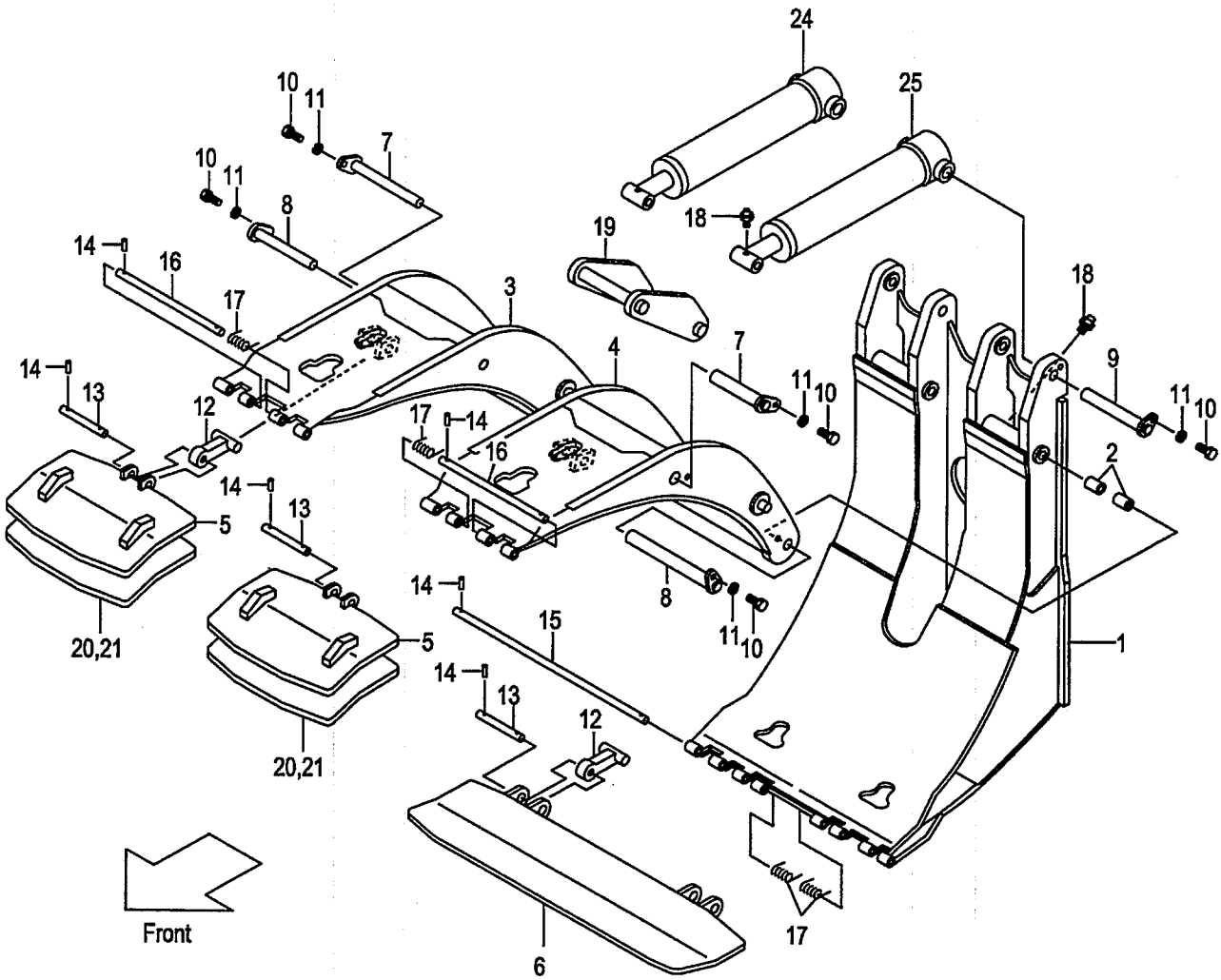

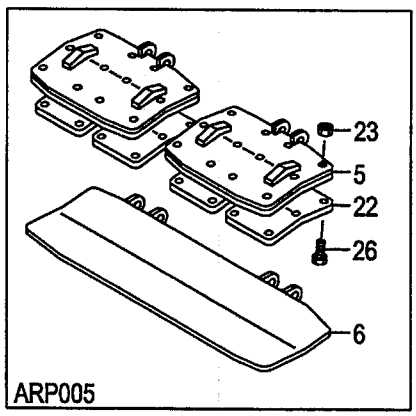

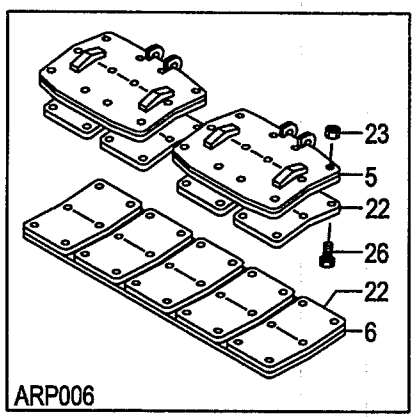

A:PRX3B9(VM/J)
B:PRX3D9(VM/J)
C:PRX3F9(VM/J)

FIG.95
(A502PRU0)

Item No	Part No.	Mark	Description		Req'd	Remarks : Serial No.
-	62479-20801		CYL,RH	ｼﾘﾝﾀﾞ	1	B SEE FIG.89
-	62479-20841		CYL,RH	ｼﾘﾝﾀﾞ	1	C SEE FIG.89
25	62479-20831		CYL,LH	ｼﾘﾝﾀﾞ	1	A SEE FIG.89
-	62479-20811		CYL,LH	ｼﾘﾝﾀﾞ	1	B SEE FIG.89
-	62479-20851		CYL,LH	ｼﾘﾝﾀﾞ	1	C SEE FIG.89
26	01120-10014		BOLT	ﾎﾞﾙﾄ	24	[ARP005]
-	01120-10014		BOLT	ﾎﾞﾙﾄ	54	[ARP006]
27	63110-18901	+	CHART,LOAD	ﾁｬｰﾄ	1	
-	514A3-82301	+	CHART,LOAD	ﾁｬｰﾄ	1	[EXB/ENGLISH][EXC/ENGLISH]
-	514A3-82301	+	CHART,LOAD	ﾁｬｰﾄ	1	[EXE/ENGLISH][EXN/ENGLISH]
-	63110-18911	+	CHART,LOAD	ﾁｬｰﾄ	1	[EXA/ENGLISH]
-	524T3-84031	+	CHART,LOAD	ﾁｬｰﾄ	1	(RUSSIAN)
-	63110-18921	+	CHART,LOAD	ﾁｬｰﾄ	1	(CHINESE)
-	514A3-82321	+	CHART,LOAD	ﾁｬｰﾄ	1	(GERMAN)
-	514A3-82341	+	CHART,LOAD	ﾁｬｰﾄ	1	(FRENCH)
-	514A3-82331	+	CHART,LOAD	ﾁｬｰﾄ	1	(SPANISH)
-	514A3-82361	+	CHART,LOAD	ﾁｬｰﾄ	1	(DANISH)
-	514A3-82381	+	CHART,LOAD	ﾁｬｰﾄ	1	(GREEK)
-	514A3-82371	+	CHART,LOAD	ﾁｬｰﾄ	1	(ITALIAN)
-	514A3-82351	+	CHART,LOAD	ﾁｬｰﾄ	1	(DUTCH)
-	514A3-82391	+	CHART,LOAD	ﾁｬｰﾄ	1	(PORTUGUESE)
28	02432-01008	+	RIVET	ﾘﾍﾞｯﾄ	4	
29	09210-10300	+	PLATE,NAME	ﾌﾟﾚｰﾄ	1	
-	09210-10300	+	PLATE,NAME	ﾌﾟﾚｰﾄ	1	(ENGLISH)
-	63110-32111	+	PLATE,NAME	ﾌﾟﾚｰﾄ	1	(RUSSIAN)
-	09201-06201	+	PLATE,NAME	ﾌﾟﾚｰﾄ	1	(CHINESE)
-	63110-19211	+	PLATE,NAME	ﾌﾟﾚｰﾄ	1	(GERMAN)
-	63110-19251	+	PLATE,NAME	ﾌﾟﾚｰﾄ	1	(FRENCH)
-	63110-19231	+	PLATE,NAME	ﾌﾟﾚｰﾄ	1	(SPANISH)
-	63110-19291	+	PLATE,NAME	ﾌﾟﾚｰﾄ	1	(DANISH)
-	63110-19331	+	PLATE,NAME	ﾌﾟﾚｰﾄ	1	(GREEK)
-	63110-19311	+	PLATE,NAME	ﾌﾟﾚｰﾄ	1	(ITALIAN)
-	63110-19271	+	PLATE,NAME	ﾌﾟﾚｰﾄ	1	(DUTCH)
-	63110-19351	+	PLATE,NAME	ﾌﾟﾚｰﾄ	1	(PORTUGUESE)
30	63110-18521	+	PLATE,CAUTION	ﾌﾟﾚｰﾄ	1	(ENGLISH)
-	63110-32121	+	PLATE,CAUTION	ﾌﾟﾚｰﾄ	1	(RUSSIAN)
-	63110-18511	+	PLATE,CAUTION	ﾌﾟﾚｰﾄ	1	(CHINESE)
-	63110-19371	+	PLATE,CAUTION	ﾌﾟﾚｰﾄ	1	(GERMAN)
-	63110-19391	+	PLATE,CAUTION	ﾌﾟﾚｰﾄ	1	(FRENCH)
-	63110-19411	+	PLATE,CAUTION	ﾌﾟﾚｰﾄ	1	(SPANISH)
-	63110-19381	+	PLATE,CAUTION	ﾌﾟﾚｰﾄ	1	(DANISH)
-	63110-19441	+	PLATE,CAUTION	ﾌﾟﾚｰﾄ	1	(GREEK)
-	63110-19431	+	PLATE,CAUTION	ﾌﾟﾚｰﾄ	1	(ITALIAN)
-	63110-19401	+	PLATE,CAUTION	ﾌﾟﾚｰﾄ	1	(DUTCH)
-	63110-19421	+	PLATE,CAUTION	ﾌﾟﾚｰﾄ	1	(PORTUGUESE)

FIG.95 ROTATING CLAMP [PRX3B9,PRX3D9,PRX3F9]

(A502PRU0) ローテーティング゛クランプ゜

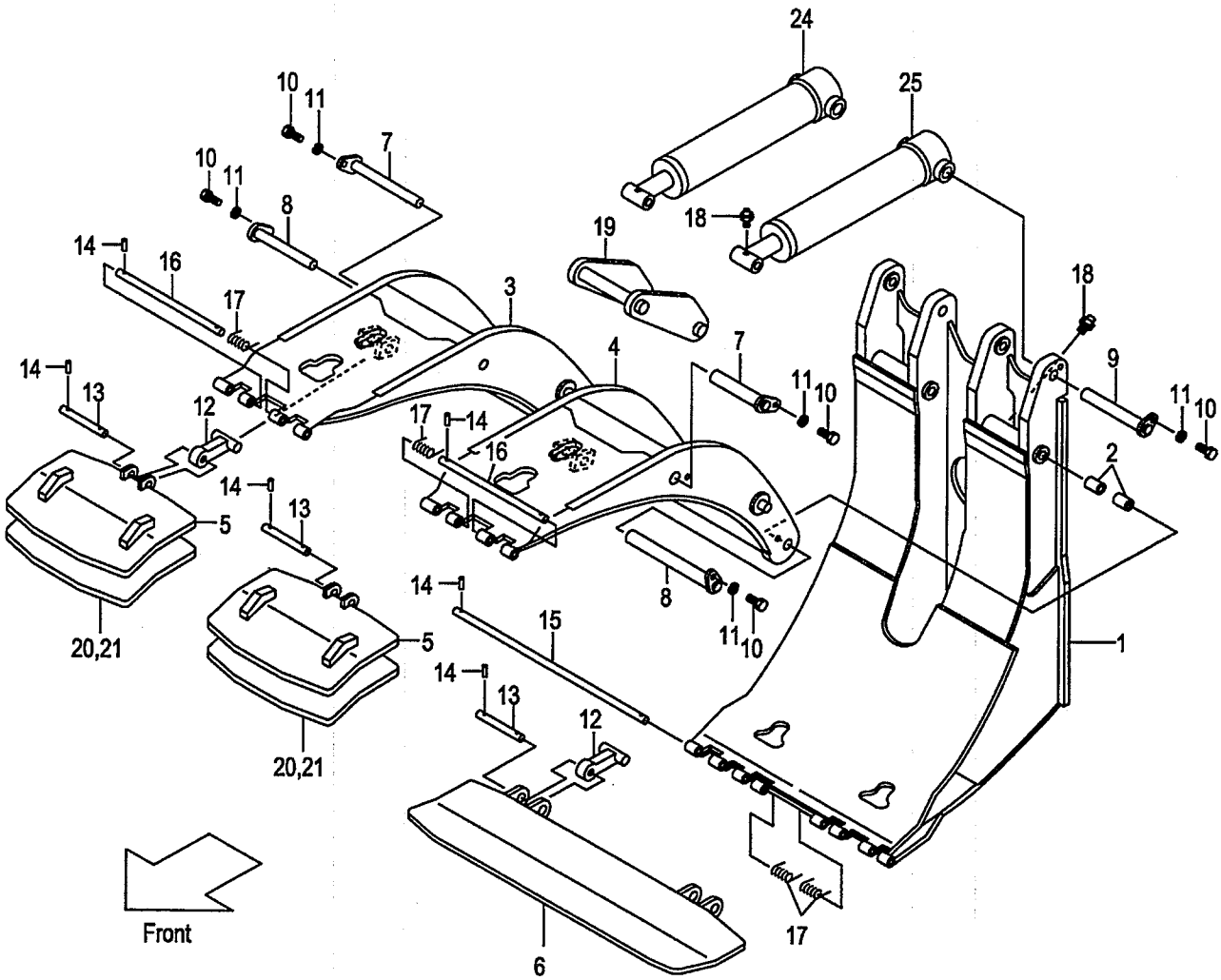

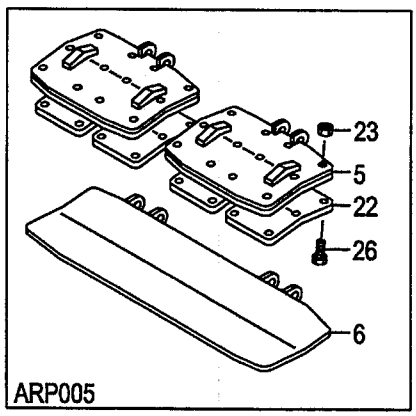

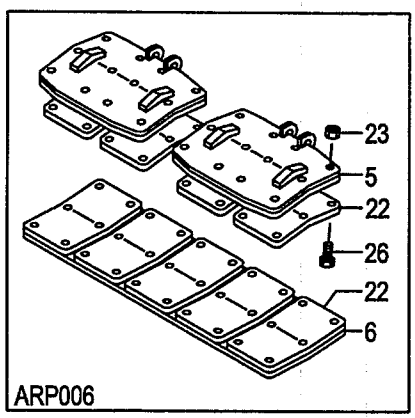

A:PRX3B9(VM/J)
B:PRX3D9(VM/J)
C:PRX3F9(VM/J)

FIG.95
(A502PRU0)

Item No	Part No.	Mark	Description		Req'd	Remarks : Serial No.
31	63110-19761	+	KNOB	ﾉﾌﾞ	1	
32	63110-19961	+	DECAL	ﾃﾞｶﾙ	1	
33	63110-19131	+	KNOB	ﾉﾌﾞ	1	
34	63110-19691	+	KNOB	ﾉﾌﾞ	1	
35	63110-19891	+	DECAL	ﾃﾞｶﾙ	1	
36	214A7-42181	+	KNOB	ﾉﾌﾞ	1	
37	62479-23591	+	COLLAR	ｶﾗｰ	2	
38	04901-00160	+	NIPPLE	ﾆｯﾌﾟﾙ	2	
39	62479-27001	+	DECAL,CAUTION	ﾃﾞｶﾙ	1	
40	27419-12072	+	DECAL,CAUTION	ﾃﾞｶﾙ	2	

FIG.96 HYDRAULIC LINE (CONNECTOR-CYLINDER & MOTOR)

(A502PRV0) ﾊｲﾄﾞﾛﾘｯｸﾗｲﾝ (ｺﾈｸﾀｰｼﾘﾝﾀﾞｰ&ﾓｰﾀ)

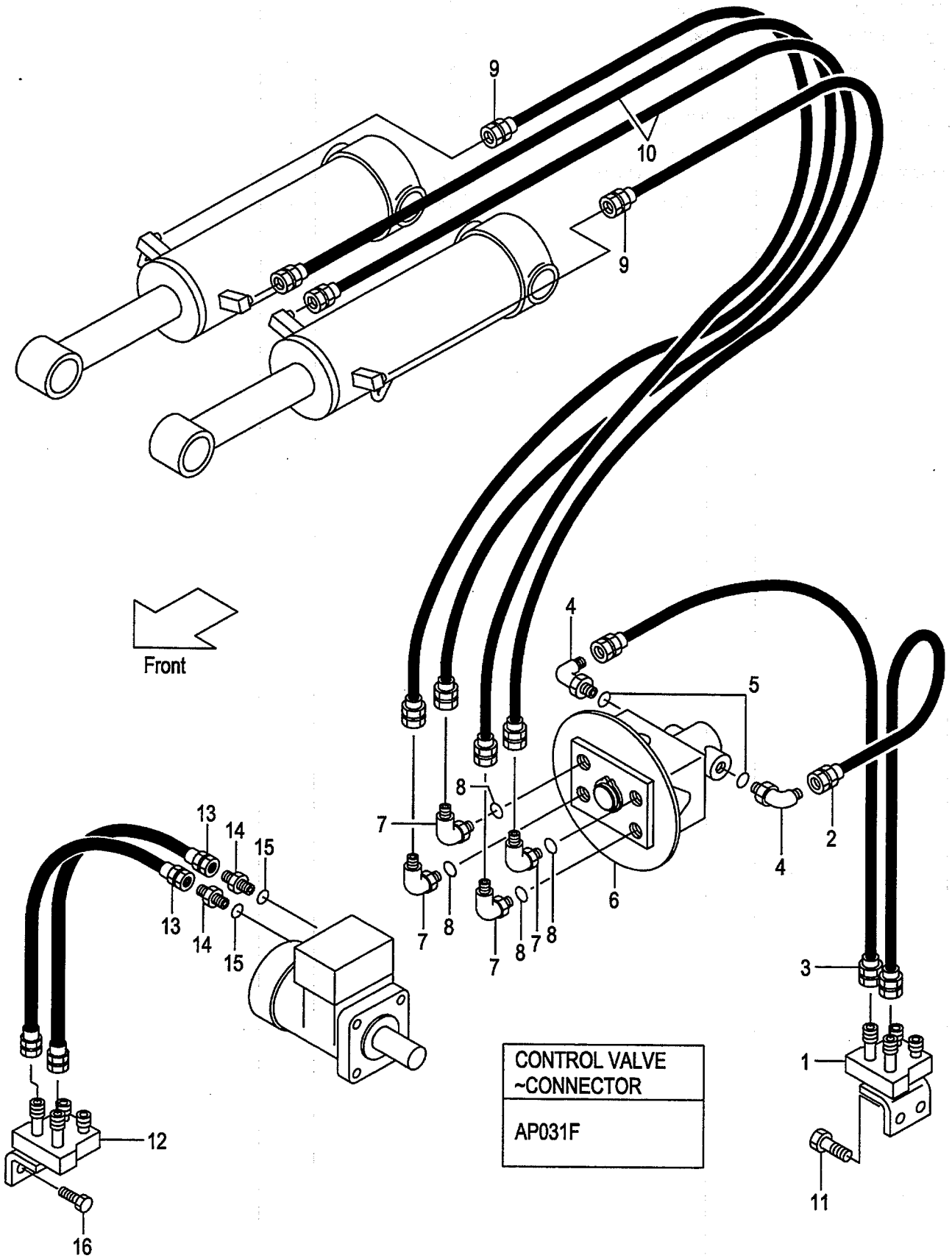

A:PRX3A9(VM/J) D:PRX3D9(VM/J)
B:PRX3B9(VM/J) E:PRX3E9(VM/J)
C:PRX3C9(VM/J) F:PRX3F9(VM/J)

FIG.96
(A502PRV0)

Item No	Part No.	Mark	Description		Req'd	Remarks : Serial No.
1	621F0-12011		STUD	ｽﾀｯﾄﾞ	1	
2	63130-21045		HOSE	ﾎｰｽ	1	
3	63130-21040		HOSE	ﾎｰｽ	1	
4	04150-00303		ELBOW	ｴﾙﾎﾞ	2	
5	03320-00140		O-RING	Oﾘﾝｸﾞ	2	
6	61439-20702		VALVE,ROTARY	ﾊﾞﾙﾌﾞ	1	SEE FIG.91
7	63110-12311		ELBOW	ｴﾙﾎﾞ	4	
8	03320-00140		O-RING	Oﾘﾝｸﾞ	4	
9	63130-31105		HOSE	ﾎｰｽ	2	A,B,E,F
-	63130-31080		HOSE	ﾎｰｽ	2	C,D
10	63130-31100		HOSE	ﾎｰｽ	2	A,B,E,F
-	63130-31075		HOSE	ﾎｰｽ	2	C,D
11	01184-10025		BOLT & WASHER	ﾎﾞﾙﾄ&ﾜｯｼｬ	2	
12	621F0-12001		STUD	ｽﾀｯﾄﾞ	1	
13	63130-21060		HOSE	ﾎｰｽ	2	
14	04134-00303		NIPPLE	ﾆｯﾌﾟﾙ	2	
15	03320-00140		O-RING	Oﾘﾝｸﾞ	2	
16	01184-10025		BOLT & WASHER	ﾎﾞﾙﾄ&ﾜｯｼｬ	2	

ROTATING DEVICE

FIG.97 **[PRX3A9,PRX3B9,PRX3C9,PRX3D9,PRX3E9,PRX3F9]**

(A502PRW0) ﾛｰﾃｰﾃｨﾝｸﾞﾃﾞﾊﾞｲｽ

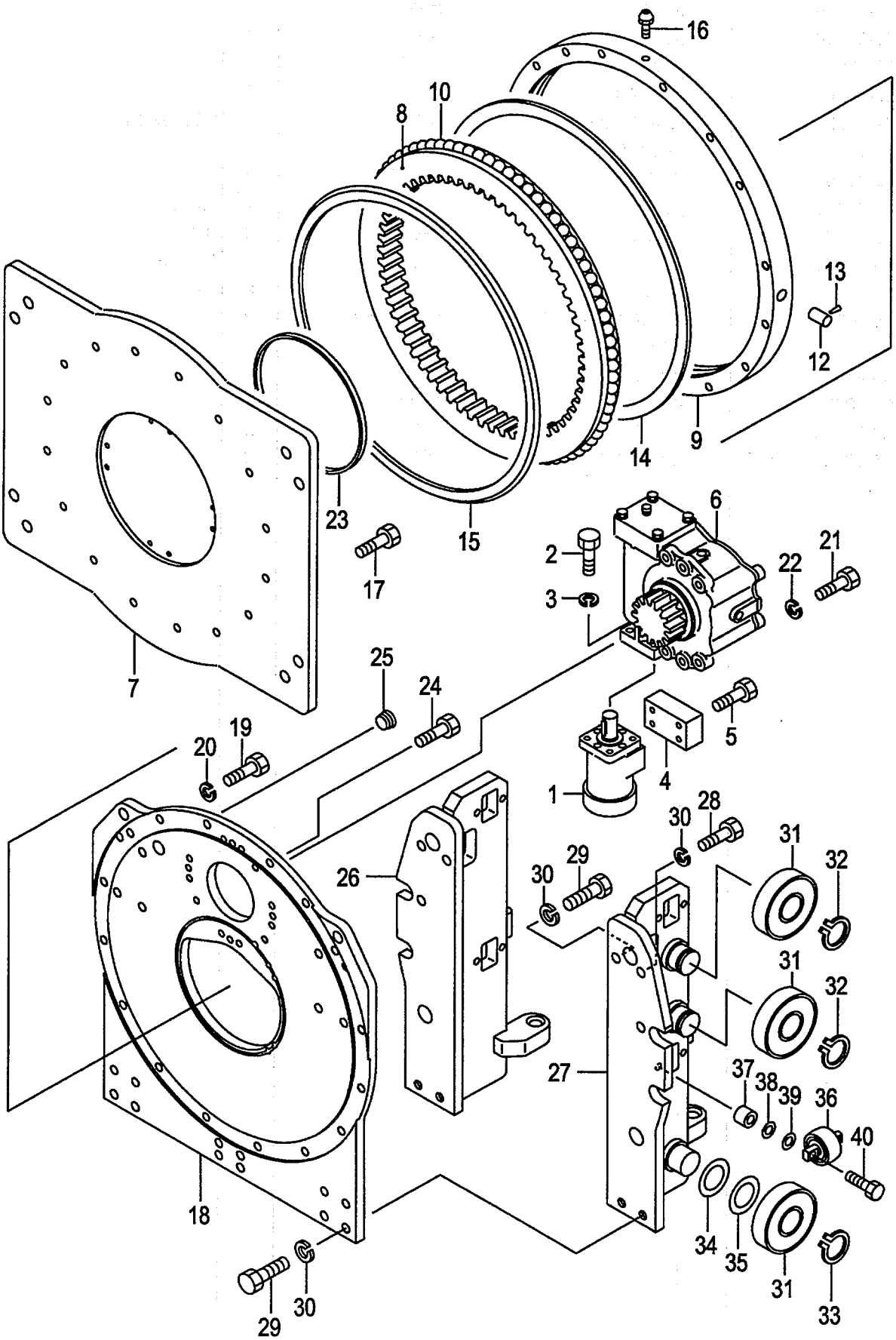

A:PRX3A9(VM/J) D:PRX3D9(VM/J)
B:PRX3B9(VM/J) E:PRX3E9(VM/J)
C:PRX3C9(VM/J) F:PRX3F9(VM/J)

FIG.97
(A502PRW0)

Item No	Part No.	Mark	Description		Req'd	Remarks : Serial No.
1	62059-12802		MOTOR	モータ	1	
2	01110-10025		BOLT	ボルト	4	
3	02010-00010		WASHER	ワッシャ	4	
4	62159-12702		VALVE,COUNTER-BAL.	バルブ	1	
5	01100-08045		BOLT	ボルト	4	
A1	62159-10101		SUB-ASSY,RD	ローテーティングデバイスサブアッセン	1	INC.6-25
6	62159-10201		REDUCTION	リダクション	1	SEE FIG.93
7	62159-12141		PLATE,ROTATING	プレート	1	
A2	62159-12071		BRG-ASSY,ROTATING	ローテーティングベアリングアッセン	1	INC.8-16
8	NO PART NO.		WHEEL,INNER	ホイール	1	
9	NO PART NO.		WHEEL,OUTER	ホイール	1	
10	03190-00026		BALL	ボール	77	
11	NO PART NO.	+	SPACER	スペーサ	77	
12	NO PART NO.		CAP	キャップ	1	
13	NO PART NO.		PIN	ピン	1	
14	62159-12261		SEAL	シール	1	
15	62159-12271		SEAL	シール	1	
16	04901-00100		FITTING	フィッティング	1	
17	01170-14045		BOLT	ボルト	16	
18	62159-12132		PLATE,BASE	プレート	1	
19	01103-14045		BOLT	ボルト	14	
20	02011-00014		WASHER	ワッシャ	14	
21	01103-12035		BOLT	ボルト	6	
22	02011-00012		WASHER	ワッシャ	6	
23	62159-12231		FELT	フェルト	1	
24	01170-14030		BOLT	ボルト	2	
25	25073-00031		PLUG	プラグ	1	
26	63179-10101		BRACKET,LIFT,RH	ブラケット	1	
27	63179-10111		BRACKET,LIFT,LH	ブラケット	1	
28	01103-16030		BOLT	ボルト	4	
29	01103-16040		BOLT	ボルト	6	
30	02011-00016		WASHER	ワッシャ	10	
31	277P8-22051		ROLLER,END,SMALL	ローラ	6	
-	277P8-22061		ROLLER,END,LARGE	ローラ	(4)	
32	02100-00045		RING,SNAP	スナップリング	4	
33	09192-30044		RING,SNAP	スナップリング	2	
34	277P8-22071		SHIM,T-0.5	シム	10	
35	277P8-22081		SHIM,T-1.0	シム	10	
36	23458-32052		ROLLER,SIDE	ローラ	4	
37	22548-34031		SPACER	スペーサ	8	
38	22548-34051		SHIM	シム	10	
39	22548-34061		SHIM	シム	10	
40	01184-12050		BOLT & WASHER	ボルト&ワッシャ	8	

FIG.98 ROTATING FORK [RF206]

(A502RF10) ローテーティング フォーク

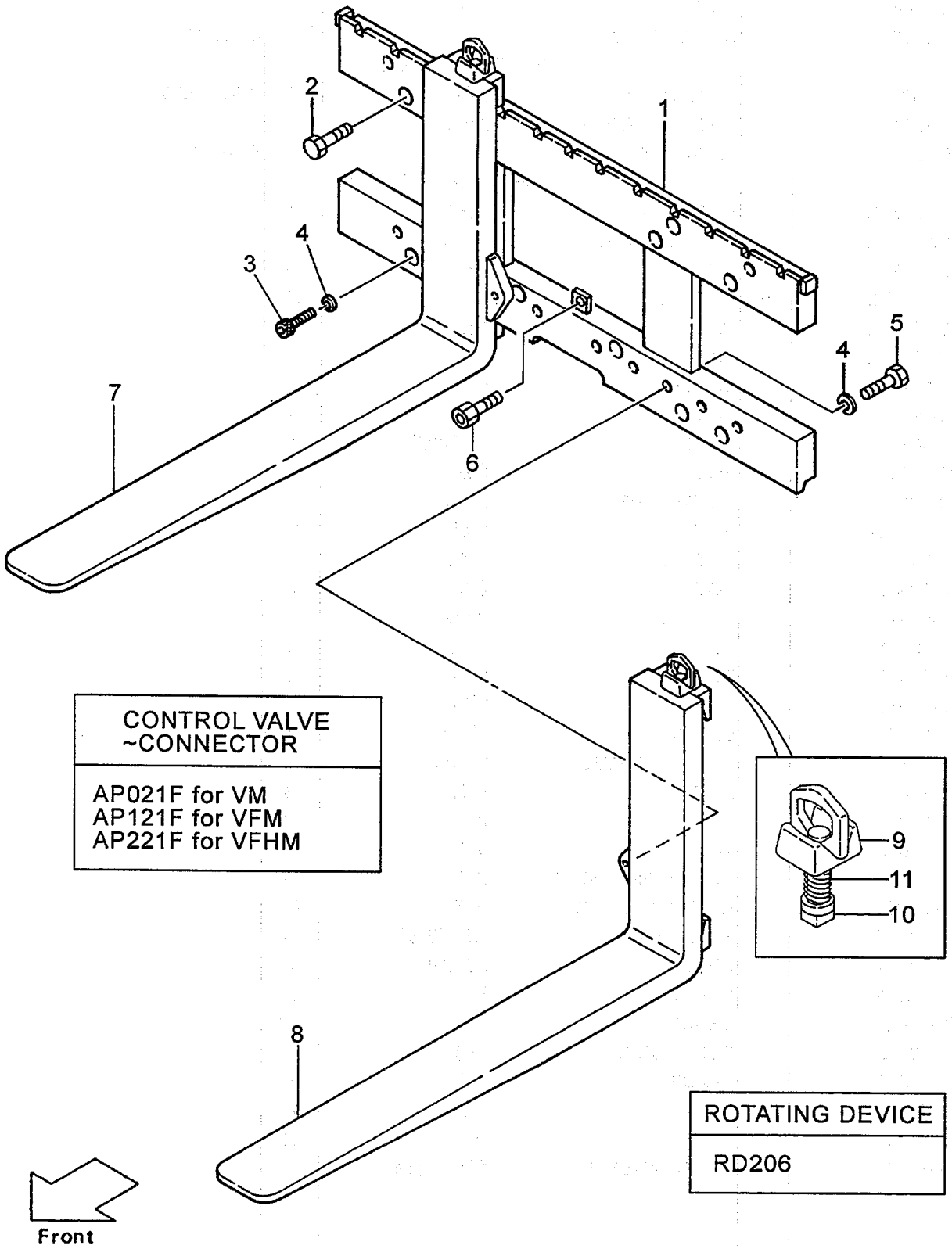

A:RF206(J)

Item No	Part No.	Mark	Description		Req'd	Remarks : Serial No.
1	62059-30001		BAR,FINGER	ﾊﾞｰ	1	
2	01170-16040		BOLT	ﾎﾞﾙﾄ	8	
3	01106-16045		BOLT	ﾎﾞﾙﾄ	6	
4	02011-00016		WASHER	ﾜｯｼｬ	8	
5	52759-32072		BOLT	ﾎﾞﾙﾄ	2	
6	01184-12025		BOLT & WASHER	ﾎﾞﾙﾄ&ﾜｯｼｬ	1	
7	62049-30205		FORK,RH	ﾌｫｰｸ	1	(L=920)
-	62049-30215		FORK,RH	ﾌｫｰｸ	1	(LFR107)
-	62049-30225		FORK,RH	ﾌｫｰｸ	1	(LFR122)
-	62049-30235		FORK,RH	ﾌｫｰｸ	1	(LFR137)
-	62049-30245		FORK,RH	ﾌｫｰｸ	1	(LFR152)
-	62049-30255		FORK,RH	ﾌｫｰｸ	1	(LFR167)
8	62049-30305		FORK,LH	ﾌｫｰｸ	1	(L=920)
-	62049-30315		FORK,LH	ﾌｫｰｸ	1	(LFR107)
-	62049-30325		FORK,LH	ﾌｫｰｸ	1	(LFR122)
-	62049-30335		FORK,LH	ﾌｫｰｸ	1	(LFR137)
-	62049-30345		FORK,LH	ﾌｫｰｸ	1	(LFR152)
-	62049-30355		FORK,LH	ﾌｫｰｸ	1	(LFR167)
A1	214A8-11002		STOPPER-ASSY	ｽﾄｯﾊﾟｱｯｾﾝ	2	INC.9-11
9	214A8-12002		HEAD	ﾍｯﾄﾞ	2	
10	214A8-12012		STOPPER	ｽﾄｯﾊﾟ	2	
11	214A8-12032		SPRING	ｽﾌﾟﾘﾝｸﾞ	2	
12	63110-18901	+	CHART,LOAD	ﾁｬｰﾄ	1	
-	514A3-82301	+	CHART,LOAD	ﾁｬｰﾄ	1	[EXB/ENGLISH][EXC/ENGLISH]
-	514A3-82301	+	CHART,LOAD	ﾁｬｰﾄ	1	[EXE/ENGLISH][EXN/ENGLISH]
-	63110-18911	+	CHART,LOAD	ﾁｬｰﾄ	1	[EXA/ENGLISH]
-	524T3-84031	+	CHART,LOAD	ﾁｬｰﾄ	1	(RUSSIAN)
-	63110-18921	+	CHART,LOAD	ﾁｬｰﾄ	1	(CHINESE)
-	514A3-82321	+	CHART,LOAD	ﾁｬｰﾄ	1	(GERMAN)
-	514A3-82341	+	CHART,LOAD	ﾁｬｰﾄ	1	(FRENCH)
-	514A3-82331	+	CHART,LOAD	ﾁｬｰﾄ	1	(SPANISH)
-	514A3-82361	+	CHART,LOAD	ﾁｬｰﾄ	1	(DANISH)
-	514A3-82381	+	CHART,LOAD	ﾁｬｰﾄ	1	(GREEK)
-	514A3-82371	+	CHART,LOAD	ﾁｬｰﾄ	1	(ITALIAN)
-	514A3-82351	+	CHART,LOAD	ﾁｬｰﾄ	1	(DUTCH)
-	514A3-82391	+	CHART,LOAD	ﾁｬｰﾄ	1	(PORTUGUESE)
13	02432-01008	+	RIVET	ﾘﾍﾞｯﾄ	4	
14	09210-10300	+	PLATE,NAME	ﾌﾟﾚｰﾄ	1	
-	63110-19201	+	PLATE,NAME	ﾌﾟﾚｰﾄ	1	(ENGLISH)
-	63110-32111	+	PLATE,NAME	ﾌﾟﾚｰﾄ	1	(RUSSIAN)
-	09201-06201	+	PLATE,NAME	ﾌﾟﾚｰﾄ	1	(CHINESE)
-	63110-19221	+	PLATE,NAME	ﾌﾟﾚｰﾄ	1	(GERMAN)
-	63110-19261	+	PLATE,NAME	ﾌﾟﾚｰﾄ	1	(FRENCH)
-	63110-19241	+	PLATE,NAME	ﾌﾟﾚｰﾄ	1	(SPANISH)
-	63110-19301	+	PLATE,NAME	ﾌﾟﾚｰﾄ	1	(DANISH)
-	63110-19341	+	PLATE,NAME	ﾌﾟﾚｰﾄ	1	(GREEK)
-	63110-19321	+	PLATE,NAME	ﾌﾟﾚｰﾄ	1	(ITALIAN)
-	63110-19281	+	PLATE,NAME	ﾌﾟﾚｰﾄ	1	(DUTCH)
-	63110-19361	+	PLATE,NAME	ﾌﾟﾚｰﾄ	1	(PORTUGUESE)
15	63110-19691	+	KNOB	ﾉﾌﾞ	1	

FIG.98 ROTATING FORK [RF206]

(A502RF10) ローテーティング フォーク

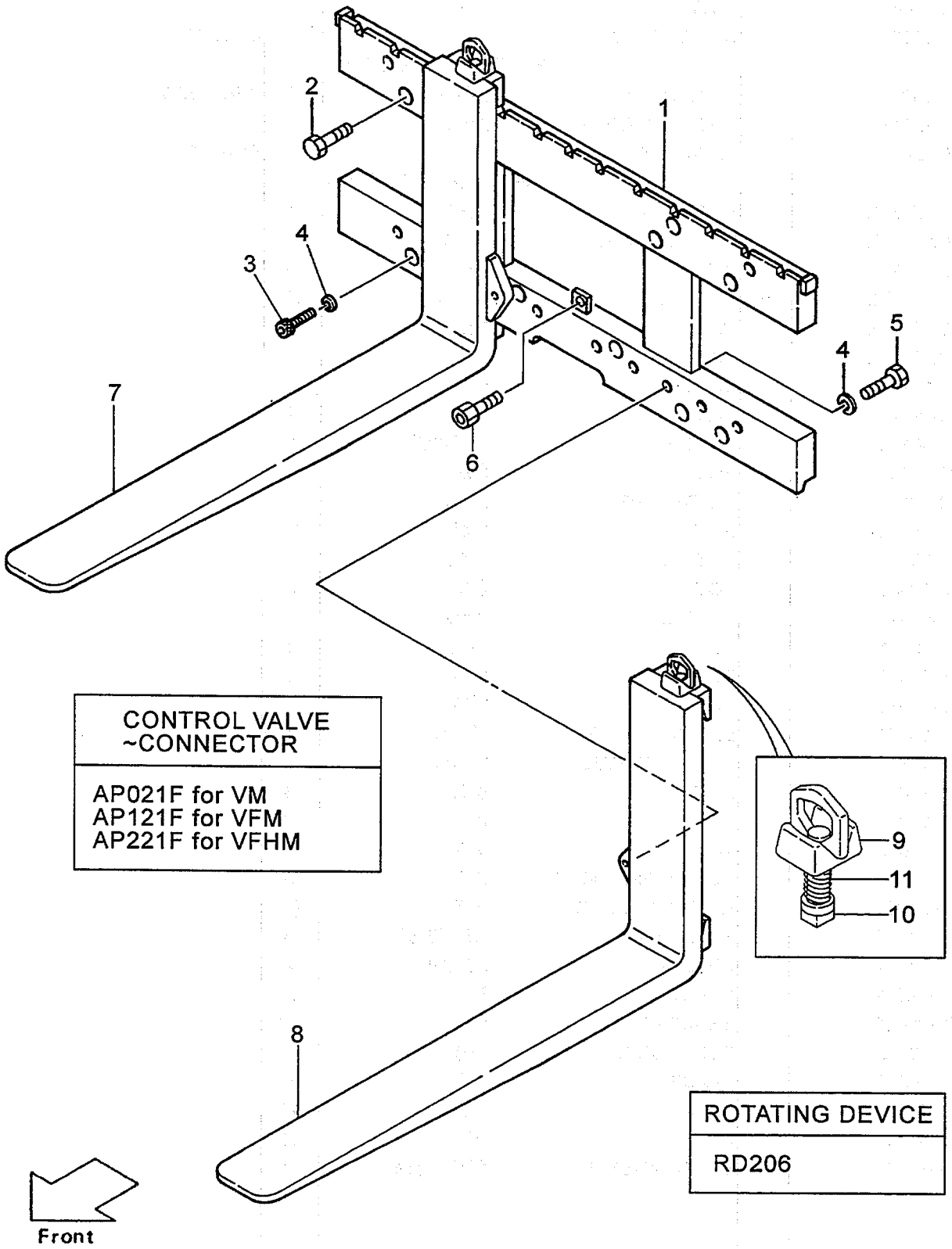

FIG.98
(A502RF10)

A:RF206(J)

Item No	Part No.	Mark	Description	Req'd	Remarks : Serial No.
16	63110-19891	+	DECAL デカル	1	
17	214A7-42181	+	KNOB,DARK-GRAY ノブ	1	
18	62059-37001	+	DECAL,CAUTION デカル	1	

FIG.99 ROTATING FORK [RFX208]

(A502RF20) ローテーティング フォーク

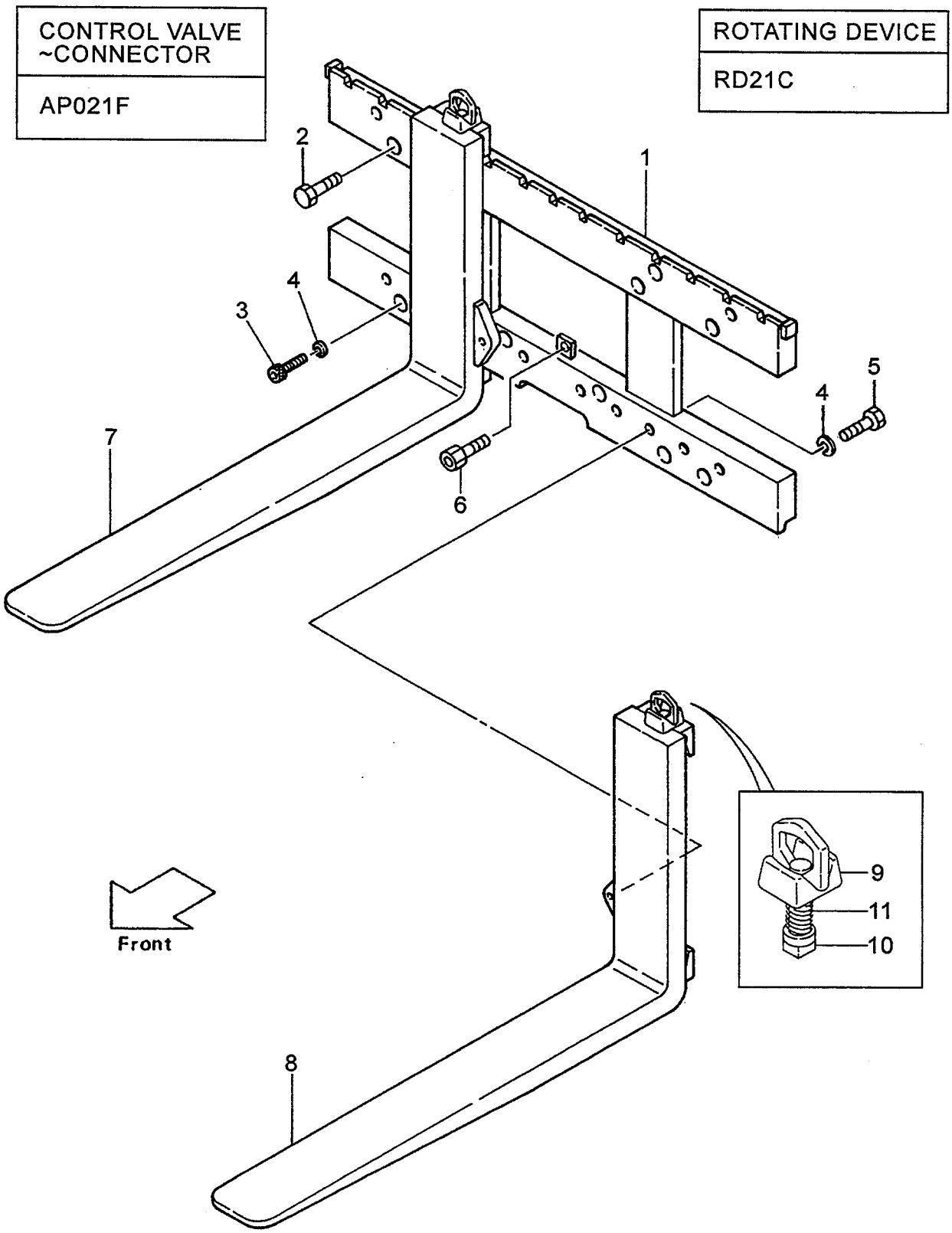

A:RFX208(VM/J)

Item No	Part No.	Mark	Description		Req'd	Remarks : Serial No.
1	62059-30001		BAR,FINGER	ﾊﾞｰ	1	
2	01170-16040		BOLT	ﾎﾞﾙﾄ	8	
3	01106-16045		BOLT	ﾎﾞﾙﾄ	6	
4	02011-00016		WASHER	ﾜｯｼｬ	8	
5	52759-32072		BOLT	ﾎﾞﾙﾄ	2	
6	01184-12025		BOLT & WASHER	ﾎﾞﾙﾄ&ﾜｯｼｬ	1	
7	62049-30205		FORK,RH	ﾌｫｰｸ	1	(L=920)(2.0T)
-	62049-30215		FORK,RH	ﾌｫｰｸ	1	(L=1070)(2.5T)
-	62049-30205		FORK,RH	ﾌｫｰｸ	1	(LFR092)(2.0T)
-	62049-30215		FORK,RH	ﾌｫｰｸ	1	(LFR107)
-	62049-30225		FORK,RH	ﾌｫｰｸ	1	(LFR122)
-	62049-30235		FORK,RH	ﾌｫｰｸ	1	(LFR137)
-	62049-30245		FORK,RH	ﾌｫｰｸ	1	(LFR152)
-	62049-30255		FORK,RH	ﾌｫｰｸ	1	(LFR167)
8	62049-30305		FORK,LH	ﾌｫｰｸ	1	(L=920)(2.0T)
-	62049-30315		FORK,LH	ﾌｫｰｸ	1	(L=1070)(2.5T)
-	62049-30305		FORK,LH	ﾌｫｰｸ	1	(LFR092)(2.0T)
-	62049-30315		FORK,LH	ﾌｫｰｸ	1	(LFR107)
-	62049-30325		FORK,LH	ﾌｫｰｸ	1	(LFR122)
-	62049-30335		FORK,LH	ﾌｫｰｸ	1	(LFR137)
-	62049-30345		FORK,LH	ﾌｫｰｸ	1	(LFR152)
-	62049-30355		FORK,LH	ﾌｫｰｸ	1	(LFR167)
A1	214A8-11002		STOPPER-ASSY	ｽﾄｯﾊﾟｱｯｾﾝ	2	INC.9-11
9	214A8-12002		HEAD	ﾍｯﾄﾞ	2	
10	214A8-12012		STOPPER	ｽﾄｯﾊﾟ	2	
11	214A8-12032		SPRING	ｽﾌﾟﾘﾝｸﾞ	2	
12	63110-18901	+	CHART,LOAD	ﾁｬｰﾄ	1	
-	514A3-82301	+	CHART,LOAD	ﾁｬｰﾄ	1	[EXB/ENGLISH][EXC/ENGLISH]
-	514A3-82301	+	CHART,LOAD	ﾁｬｰﾄ	1	[EXE/ENGLISH][EXN/ENGLISH]
-	63110-18911	+	CHART,LOAD	ﾁｬｰﾄ	1	[EXA/ENGLISH]
-	524T3-84031	+	CHART,LOAD	ﾁｬｰﾄ	1	(RUSSIAN)
-	63110-18921	+	CHART,LOAD	ﾁｬｰﾄ	1	(CHINESE)
-	514A3-82321	+	CHART,LOAD	ﾁｬｰﾄ	1	(GERMAN)
-	514A3-82341	+	CHART,LOAD	ﾁｬｰﾄ	1	(FRENCH)
-	514A3-82331	+	CHART,LOAD	ﾁｬｰﾄ	1	(SPANISH)
-	514A3-82361	+	CHART,LOAD	ﾁｬｰﾄ	1	(DANISH)
-	514A3-82381	+	CHART,LOAD	ﾁｬｰﾄ	1	(GREEK)
-	514A3-82371	+	CHART,LOAD	ﾁｬｰﾄ	1	(ITALIAN)
-	514A3-82351	+	CHART,LOAD	ﾁｬｰﾄ	1	(DUTCH)
-	514A3-82391	+	CHART,LOAD	ﾁｬｰﾄ	1	(PORTUGUESE)
13	02432-01008	+	RIVET	ﾘﾍﾞｯﾄ	4	
14	09210-10300	+	PLATE,NAME	ﾌﾟﾚｰﾄ	1	
-	63110-19201	+	PLATE,NAME	ﾌﾟﾚｰﾄ	1	(ENGLISH)
-	63110-32111	+	PLATE,NAME	ﾌﾟﾚｰﾄ	1	(RUSSIAN)
-	09201-06201	+	PLATE,NAME	ﾌﾟﾚｰﾄ	1	(CHINESE)
-	63110-19211	+	PLATE,NAME	ﾌﾟﾚｰﾄ	1	(GERMAN)
-	63110-19251	+	PLATE,NAME	ﾌﾟﾚｰﾄ	1	(FRENCH)
-	63110-19231	+	PLATE,NAME	ﾌﾟﾚｰﾄ	1	(SPANISH)
-	63110-19291	+	PLATE,NAME	ﾌﾟﾚｰﾄ	1	(DANISH)
-	63110-19331	+	PLATE,NAME	ﾌﾟﾚｰﾄ	1	(GREEK)

FIG.99 ROTATING FORK [RFX208]

(A502RF20) ローテーティング フォーク

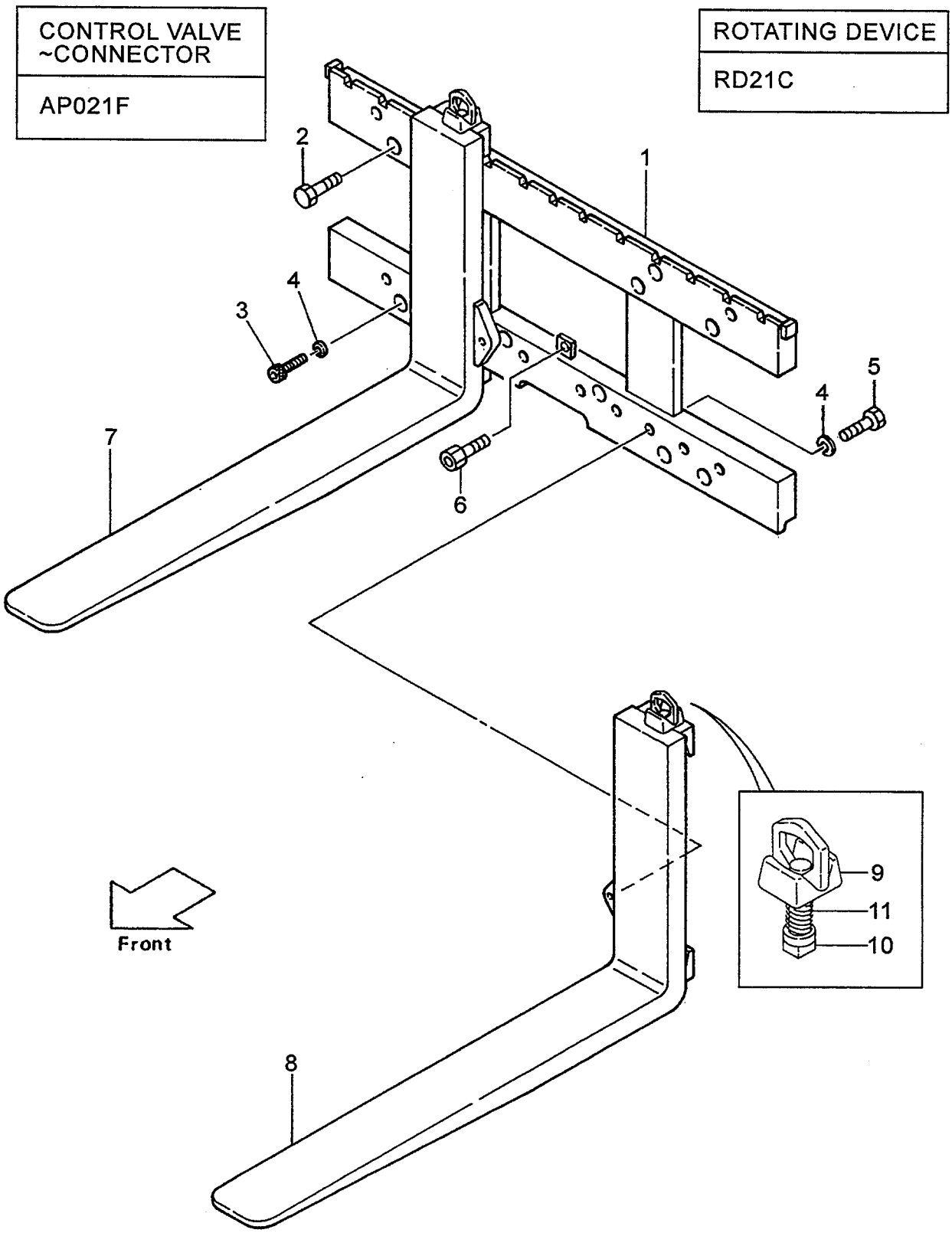

FIG.99
(A502RF20)

A:RFX208(VM/J)

Item No	Part No.	Mark	Description		Req'd	Remarks : Serial No.
-	63110-19311	+	PLATE,NAME	ﾌﾟﾚｰﾄ	1	(ITALIAN)
-	63110-19271	+	PLATE,NAME	ﾌﾟﾚｰﾄ	1	(DUTCH)
-	63110-19351	+	PLATE,NAME	ﾌﾟﾚｰﾄ	1	(PORTUGUESE)
15	63110-19691	+	KNOB	ﾉﾌﾞ	1	
16	63110-19891	+	DECAL	ﾃﾞｶﾙ	1	
17	214A7-42181	+	KNOB,DARK-GRAY	ﾉﾌﾞ	1	
18	62059-37001	+	DECAL,CAUTION	ﾃﾞｶﾙ	1	

FIG.100 ROTATING FORK [RF317]

(A503RF10) ローテーティング゛フォーク

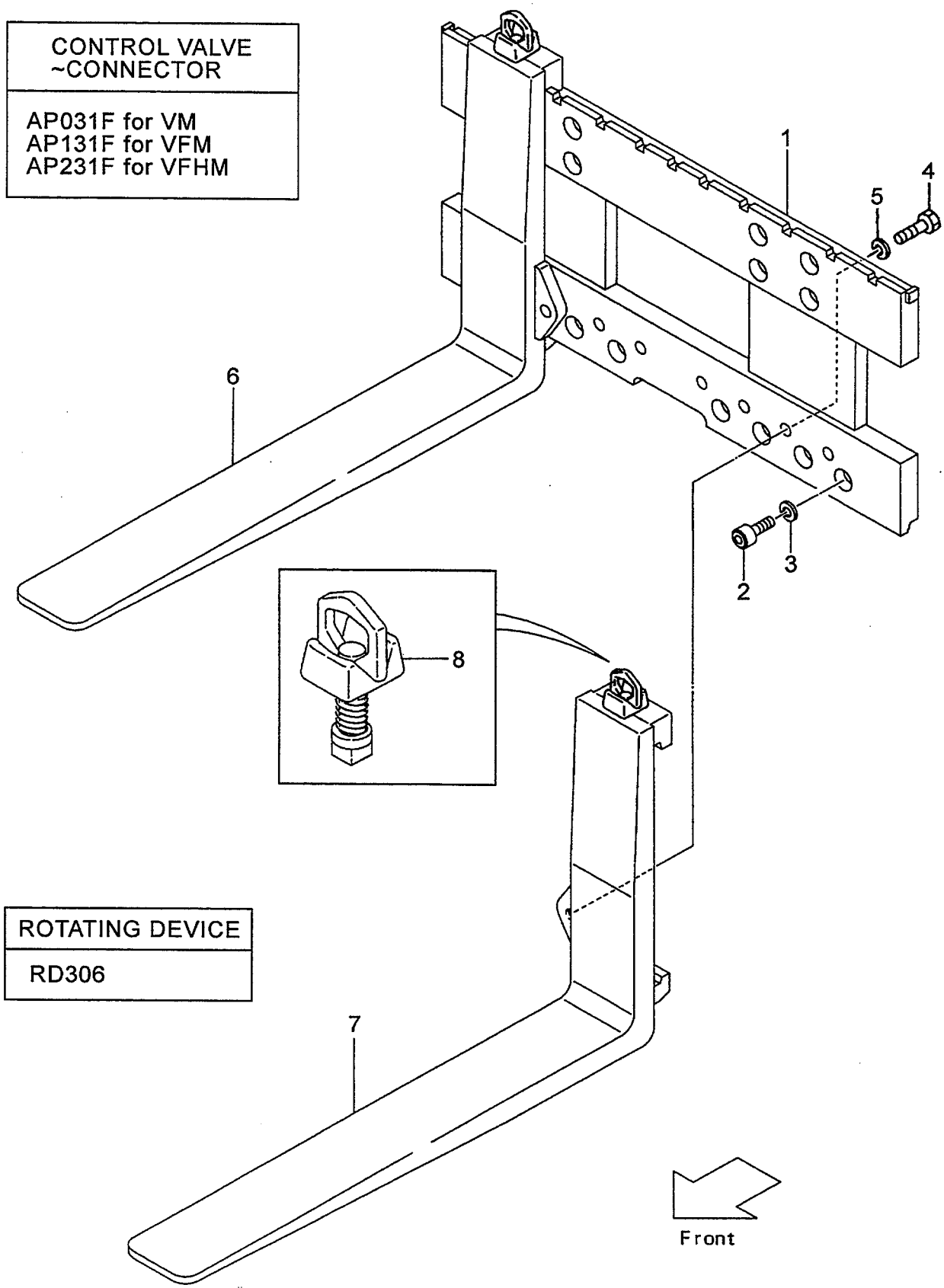

A:RF317(J)

Item No	Part No.	Mark	Description		Req'd	Remarks : Serial No.
1	63169-30101		BAR,FINGER	ﾊﾞｰ	1	
2	01106-20040		BOLT	ﾎﾞﾙﾄ	14	
3	02011-00020		WASHER	ﾜｯｼｬ	14	
4	53819-32022		BOLT	ﾎﾞﾙﾄ	2	
5	02011-00024		WASHER	ﾜｯｼｬ	2	
6	63169-30301		FORK,RH	ﾌｫｰｸ	1	(L=1070)
-	63169-30321		FORK,RH	ﾌｫｰｸ	1	(LFR122)
-	63169-30341		FORK,RH	ﾌｫｰｸ	1	(LFR137)
-	63169-30361		FORK,RH	ﾌｫｰｸ	1	(LFR152)
-	63169-30381		FORK,RH	ﾌｫｰｸ	1	(LFR167)
-	63169-30401		FORK,RH	ﾌｫｰｸ	1	(LFR182)
7	63169-30311		FORK,LH	ﾌｫｰｸ	1	(L=1070)
-	63169-30331		FORK,LH	ﾌｫｰｸ	1	(LFR122)
-	63169-30351		FORK,LH	ﾌｫｰｸ	1	(LFR137)
-	63169-30371		FORK,LH	ﾌｫｰｸ	1	(LFR152)
-	63169-30391		FORK,LH	ﾌｫｰｸ	1	(LFR167)
-	63169-30411		FORK,LH	ﾌｫｰｸ	1	(LFR182)
8	214J8-11002		STOPPER,FORK	ｽﾄｯﾊﾟ	2	
9	01184-12025	+	BOLT & WASHER	ﾎﾞﾙﾄ&ﾜｯｼｬ	1	
10	63110-18901	+	CHART,LOAD	ﾁｬｰﾄ	1	
-	514A3-82301	+	CHART,LOAD	ﾁｬｰﾄ	1	[EXB/ENGLISH][EXC/ENGLISH]
-	514A3-82301	+	CHART,LOAD	ﾁｬｰﾄ	1	[EXE/ENGLISH][EXN/ENGLISH]
-	63110-18911	+	CHART,LOAD	ﾁｬｰﾄ	1	[EXA/ENGLISH]
-	524T3-84031	+	CHART,LOAD	ﾁｬｰﾄ	1	(RUSSIAN)
-	63110-18921	+	CHART,LOAD	ﾁｬｰﾄ	1	(CHINESE)
-	514A3-82321	+	CHART,LOAD	ﾁｬｰﾄ	1	(GERMAN)
-	514A3-82341	+	CHART,LOAD	ﾁｬｰﾄ	1	(FRENCH)
-	514A3-82331	+	CHART,LOAD	ﾁｬｰﾄ	1	(SPANISH)
-	514A3-82361	+	CHART,LOAD	ﾁｬｰﾄ	1	(DANISH)
-	514A3-82381	+	CHART,LOAD	ﾁｬｰﾄ	1	(GREEK)
-	514A3-82371	+	CHART,LOAD	ﾁｬｰﾄ	1	(ITALIAN)
-	514A3-82351	+	CHART,LOAD	ﾁｬｰﾄ	1	(DUTCH)
-	514A3-82391	+	CHART,LOAD	ﾁｬｰﾄ	1	(PORTUGUESE)
11	02432-01008	+	RIVET	ﾘﾍﾞｯﾄ	4	
12	09210-10300	+	PLATE,NAME	ﾌﾟﾚｰﾄ	1	
-	63110-19201	+	PLATE,NAME	ﾌﾟﾚｰﾄ	1	(ENGLISH)
-	63110-32111	+	PLATE,NAME	ﾌﾟﾚｰﾄ	1	(RUSSIAN)
-	09201-06201	+	PLATE,NAME	ﾌﾟﾚｰﾄ	1	(CHINESE)
-	63110-19221	+	PLATE,NAME	ﾌﾟﾚｰﾄ	1	(GERMAN)
-	63110-19261	+	PLATE,NAME	ﾌﾟﾚｰﾄ	1	(FRENCH)
-	63110-19241	+	PLATE,NAME	ﾌﾟﾚｰﾄ	1	(SPANISH)
-	63110-19301	+	PLATE,NAME	ﾌﾟﾚｰﾄ	1	(DANISH)
-	63110-19341	+	PLATE,NAME	ﾌﾟﾚｰﾄ	1	(GREEK)
-	63110-19321	+	PLATE,NAME	ﾌﾟﾚｰﾄ	1	(ITALIAN)
-	63110-19281	+	PLATE,NAME	ﾌﾟﾚｰﾄ	1	(DUTCH)
-	63110-19361	+	PLATE,NAME	ﾌﾟﾚｰﾄ	1	(PORTUGUESE)
13	63110-19691	+	KNOB	ﾉﾌﾞ	1	
14	63110-19891	+	DECAL	ﾃﾞｶﾙ	1	
15	214A7-42181	+	KNOB,DARK-GRAY	ﾉﾌﾞ	1	
16	62059-37001	+	DECAL,CAUTION	ﾃﾞｶﾙ	1	

FIG.101 ROTATING FORK [RFX319]

(A503RF20) ローテーティング゛フォーク

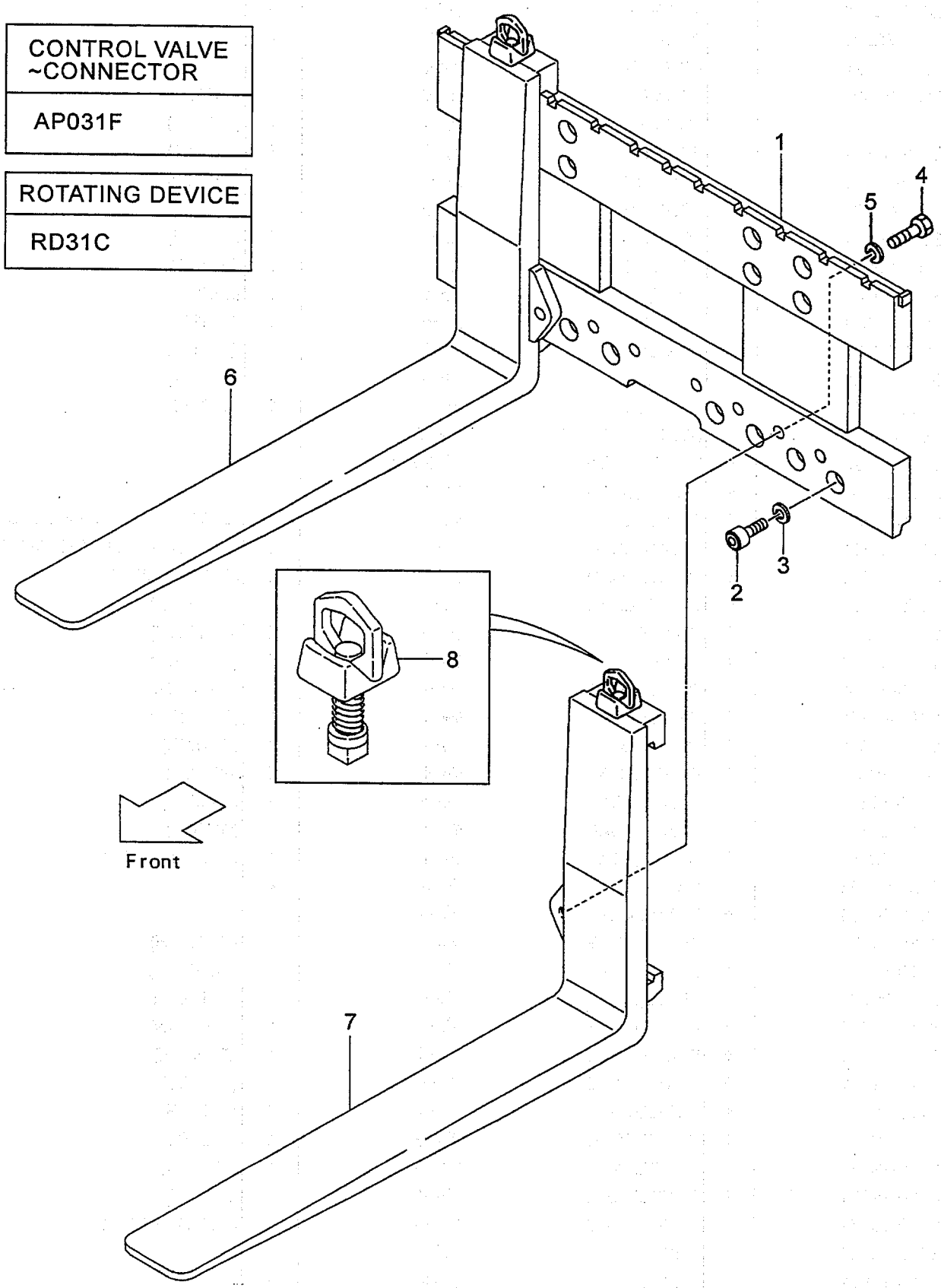

A:RFX319(VM/J)

Item No	Part No.	Mark	Description		Req'd	Remarks : Serial No.
1	63169-30101		BAR,FINGER	ﾊﾞｰ	1	
2	01106-20040		BOLT	ﾎﾞﾙﾄ	14	
3	02011-00020		WASHER	ﾜｯｼｬ	14	
4	53819-32022		BOLT	ﾎﾞﾙﾄ	2	
5	02011-00024		WASHER	ﾜｯｼｬ	2	
6	63169-30301		FORK,RH	ﾌｫｰｸ	1	(L=1070)
-	63169-30301		FORK,RH	ﾌｫｰｸ	1	(LFR107)
-	63169-30321		FORK,RH	ﾌｫｰｸ	1	(LFR122)
-	63169-30341		FORK,RH	ﾌｫｰｸ	1	(LFR137)
-	63169-30361		FORK,RH	ﾌｫｰｸ	1	(LFR152)
-	63169-30381		FORK,RH	ﾌｫｰｸ	1	(LFR167)
-	63169-30401		FORK,RH	ﾌｫｰｸ	1	(LFR182)
7	63169-30311		FORK,LH	ﾌｫｰｸ	1	(L=1070)
-	63169-30311		FORK,LH	ﾌｫｰｸ	1	(LFR107)
-	63169-30331		FORK,LH	ﾌｫｰｸ	1	(LFR122)
-	63169-30351		FORK,LH	ﾌｫｰｸ	1	(LFR137)
-	63169-30371		FORK,LH	ﾌｫｰｸ	1	(LFR152)
-	63169-30391		FORK,LH	ﾌｫｰｸ	1	(LFR167)
-	63169-30411		FORK,LH	ﾌｫｰｸ	1	(LFR182)
8	214J8-11002		STOPPER,FORK	ｽﾄｯﾊﾟ	2	
9	01184-12025	+	BOLT & WASHER	ﾎﾞﾙﾄ&ﾜｯｼｬ	1	
10	63110-18901	+	CHART,LOAD	ﾁｬｰﾄ	1	
-	514A3-82301	+	CHART,LOAD	ﾁｬｰﾄ	1	[EXB/ENGLISH][EXC/ENGLISH]
-	514A3-82301	+	CHART,LOAD	ﾁｬｰﾄ	1	[EXE/ENGLISH][EXN/ENGLISH]
-	63110-18911	+	CHART,LOAD	ﾁｬｰﾄ	1	[EXA/ENGLISH]
-	524T3-84031	+	CHART,LOAD	ﾁｬｰﾄ	1	(RUSSIAN)
-	63110-18921	+	CHART,LOAD	ﾁｬｰﾄ	1	(CHINESE)
-	514A3-82321	+	CHART,LOAD	ﾁｬｰﾄ	1	(GERMAN)
-	514A3-82341	+	CHART,LOAD	ﾁｬｰﾄ	1	(FRENCH)
-	514A3-82331	+	CHART,LOAD	ﾁｬｰﾄ	1	(SPANISH)
-	514A3-82361	+	CHART,LOAD	ﾁｬｰﾄ	1	(DANISH)
-	514A3-82381	+	CHART,LOAD	ﾁｬｰﾄ	1	(GREEK)
-	514A3-82371	+	CHART,LOAD	ﾁｬｰﾄ	1	(ITALIAN)
-	514A3-82351	+	CHART,LOAD	ﾁｬｰﾄ	1	(DUTCH)
-	514A3-82391	+	CHART,LOAD	ﾁｬｰﾄ	1	(PORTUGUESE)
11	02432-01008	+	RIVET	ﾘﾍﾞｯﾄ	4	
12	09210-10300	+	PLATE,NAME	ﾌﾟﾚｰﾄ	1	
-	63110-19201	+	PLATE,NAME	ﾌﾟﾚｰﾄ	1	(ENGLISH)
-	63110-32111	+	PLATE,NAME	ﾌﾟﾚｰﾄ	1	(RUSSIAN)
-	09201-06201	+	PLATE,NAME	ﾌﾟﾚｰﾄ	1	(CHINESE)
-	63110-19211	+	PLATE,NAME	ﾌﾟﾚｰﾄ	1	(GERMAN)
-	63110-19251	+	PLATE,NAME	ﾌﾟﾚｰﾄ	1	(FRENCH)
-	63110-19231	+	PLATE,NAME	ﾌﾟﾚｰﾄ	1	(SPANISH)
-	63110-19291	+	PLATE,NAME	ﾌﾟﾚｰﾄ	1	(DANISH)
-	63110-19331	+	PLATE,NAME	ﾌﾟﾚｰﾄ	1	(GREEK)
-	63110-19311	+	PLATE,NAME	ﾌﾟﾚｰﾄ	1	(ITALIAN)
-	63110-19271	+	PLATE,NAME	ﾌﾟﾚｰﾄ	1	(DUTCH)
-	63110-19351	+	PLATE,NAME	ﾌﾟﾚｰﾄ	1	(PORTUGUESE)
13	63110-19691	+	KNOB	ﾉﾌﾞ	1	
14	63110-19891	+	DECAL	ﾃﾞｶﾙ	1	

FIG.101 ROTATING FORK [RFX319]

(A503RF20) ローテーティング゛フォーク

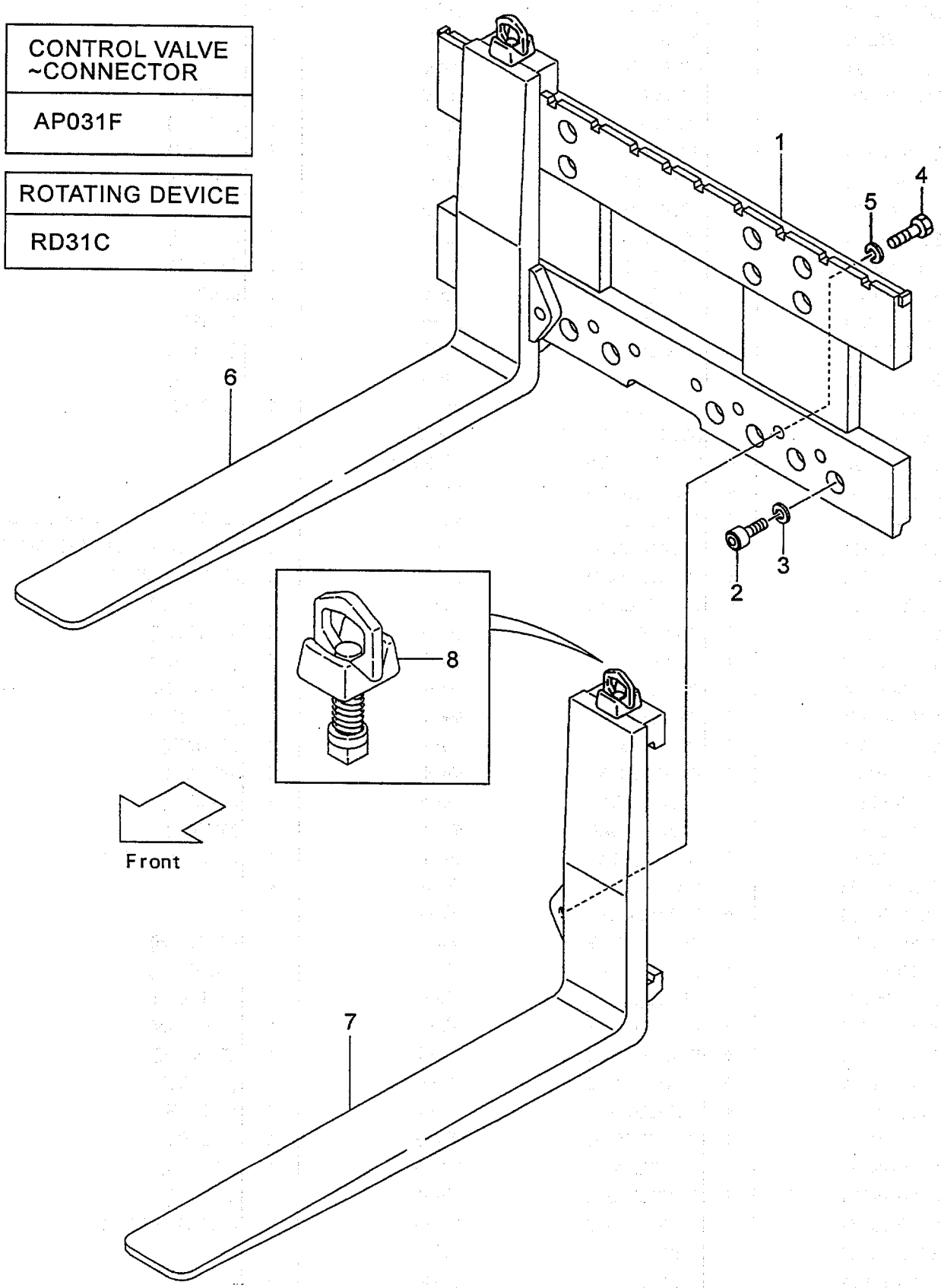

FIG.101
(A503RF20)

A:RFX319(VM/J)

Item No	Part No.	Mark	Description	Req'd	Remarks : Serial No.
15	214A7-42181	+	KNOB,DARK-GRAY ﾉﾌﾞ	1	
16	62059-37001	+	DECAL,CAUTION ﾃﾞｶﾙ	1	

FIG.102 ROTATING DEVICE [RD206]

(A402RD20) ﾛｰﾃｰﾃｨﾝｸﾞﾃﾞﾊﾞｲｽ

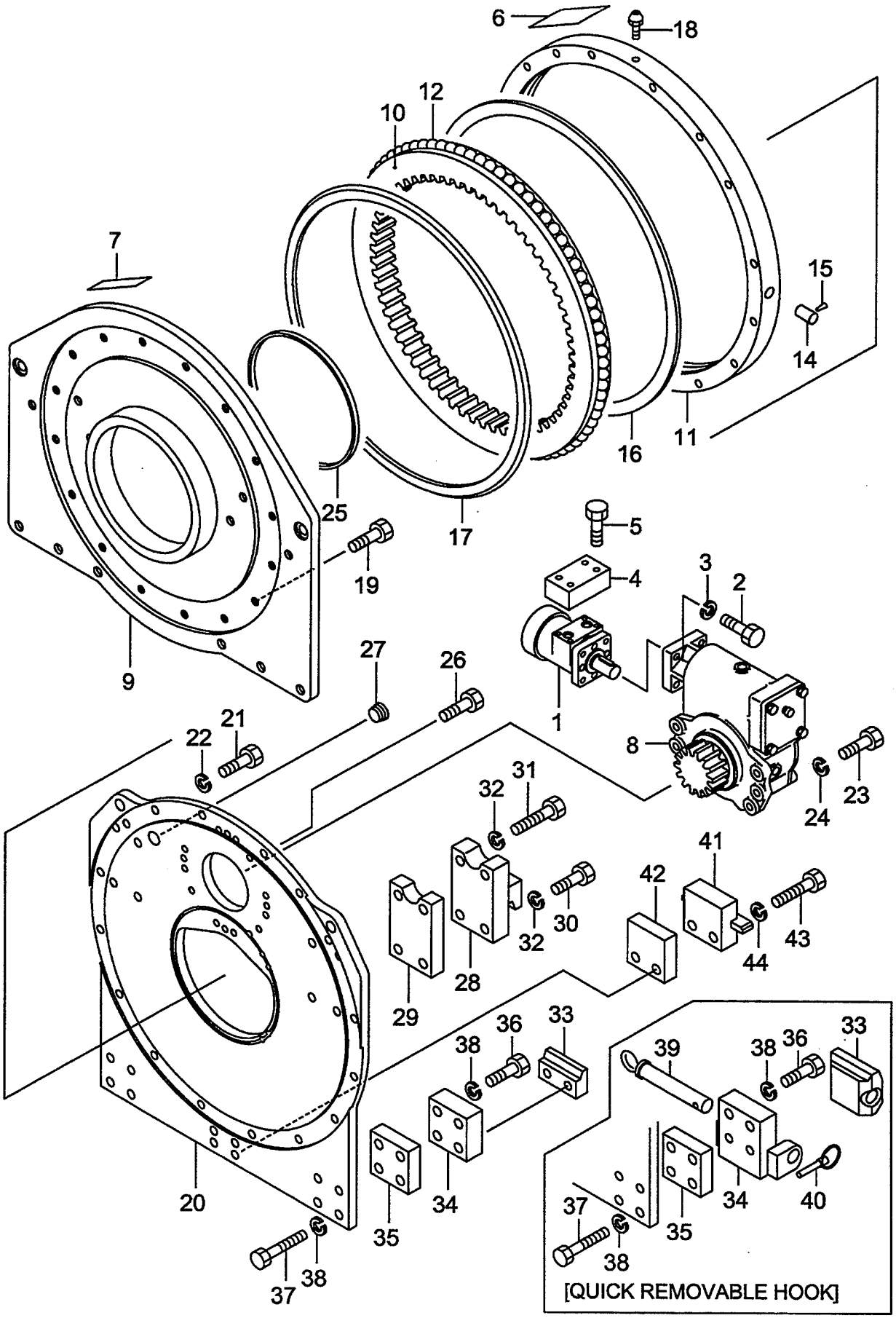

A:RD206

Item No	Part No.	Mark	Description		Req'd	Remarks : Serial No.
A1	62069-10001		DEVICE-ASSY,ROTATING		1	INC.1-44
				ﾛｰﾃｰﾃｨﾝｸﾞﾃﾞﾊﾞｲｽｱｯｾﾝ		
-	62069-10011		DEVICE-ASSY,ROTATING		1	[HIGH TORQUE] INC.1-44
				ﾛｰﾃｰﾃｨﾝｸﾞﾃﾞﾊﾞｲｽｱｯｾﾝ		
1	62059-12801		MOTOR	ﾓｰﾀ	1	SEE FIG.111
-	63059-12801		MOTOR	ﾓｰﾀ	1	[HIGH TORQUE]SEE FIG.111
2	01110-10025		BOLT	ﾎﾞﾙﾄ	4	
3	02010-00010		WASHER	ﾜｯｼｬ	4	
4	62159-12702		VALVE,COUNT.,BALANCE	ﾊﾞﾙﾌﾞ	1	
5	01100-08045		BOLT	ﾎﾞﾙﾄ	4	
6	62159-12501		DECAL	ﾃﾞｶﾙ	1	
7	62159-12511		DECAL	ﾃﾞｶﾙ	4	
A2	62169-10101		SUB-ASSY,DEVICE,ROT.		1	INC.8-27
				ﾛｰﾃｰﾃｨﾝｸﾞﾃﾞﾊﾞｲｽｻﾌﾞｱｯｾﾝ		
8	62159-10201		REDUCTION	ﾘﾀﾞｸｼｮﾝ	1	SEE FIG.103
9	62169-12001		PLATE,ROTATING	ﾌﾟﾚｰﾄ	1	
A3	62159-12071		BRG-ASSY,ROTATING		1	INC.10-18
				ﾛｰﾃｰﾃｨﾝｸﾞﾍﾞｱﾘﾝｸﾞｱｯｾﾝ		
10	NO PART NO.		WHEEL,INNER	ﾎｲｰﾙ	1	
11	NO PART NO.		WHEEL,OUTER	ﾎｲｰﾙ	1	
12	03190-00026		BALL	ﾎﾞｰﾙ	77	
13	NO PART NO.	+	SPACER	ｽﾍﾟｰｻ	77	
14	NO PART NO.		CAP	ｷｬｯﾌﾟ	1	
15	NO PART NO.		PIN	ﾋﾟﾝ	1	
16	62159-12261		SEAL	ｼｰﾙ	1	
17	62159-12271		SEAL	ｼｰﾙ	1	
18	04901-00100		FITTING	ﾌｨｯﾃｨﾝｸﾞ	1	
19	01170-14045		BOLT	ﾎﾞﾙﾄ	16	
20	62159-12132		PLATE,BASE	ﾌﾟﾚｰﾄ	1	
21	01103-14045		BOLT	ﾎﾞﾙﾄ	14	
22	02011-00014		WASHER	ﾜｯｼｬ	14	
23	01103-12035		BOLT	ﾎﾞﾙﾄ	6	
24	02011-00012		WASHER	ﾜｯｼｬ	6	
25	62159-12231		FELT	ﾌｪﾙﾄ	1	
26	01170-14030		BOLT	ﾎﾞﾙﾄ	2	
27	25073-00031		PLUG	ﾌﾟﾗｸﾞ	1	
28	62059-12001		GUIDE	ｶﾞｲﾄﾞ	2	
29	62059-12051		SPACER	ｽﾍﾟｰｻ	2	
30	01103-16070		BOLT	ﾎﾞﾙﾄ	4	
31	01103-16085		BOLT	ﾎﾞﾙﾄ	4	
32	02011-00016		WASHER	ﾜｯｼｬ	8	
33	62059-12101		GUIDE	ｶﾞｲﾄﾞ	2	
-	62039-12682		GUIDE	ｶﾞｲﾄﾞ	2	[QUICK REMOVABLEHOOK]
34	62059-12161		SPACER	ｽﾍﾟｰｻ	2	
-	62059-12601		GUIDE	ｶﾞｲﾄﾞ	2	[QUICK REMOVABLEHOOK]
35	62059-12151		SPACER	ｽﾍﾟｰｻ	2	
36	01103-16070		BOLT	ﾎﾞﾙﾄ	4	
37	01103-16120		BOLT	ﾎﾞﾙﾄ	4	
38	02011-00016		WASHER	ﾜｯｼｬ	8	
39	62039-12691		PIN	ﾋﾟﾝ	2	[QUICK REMOVABLEHOOK]

FIG.102 ROTATING DEVICE [RD206]

(A402RD20) ﾛｰﾃｰﾃｨﾝｸﾞﾃﾞﾊﾞｲｽ

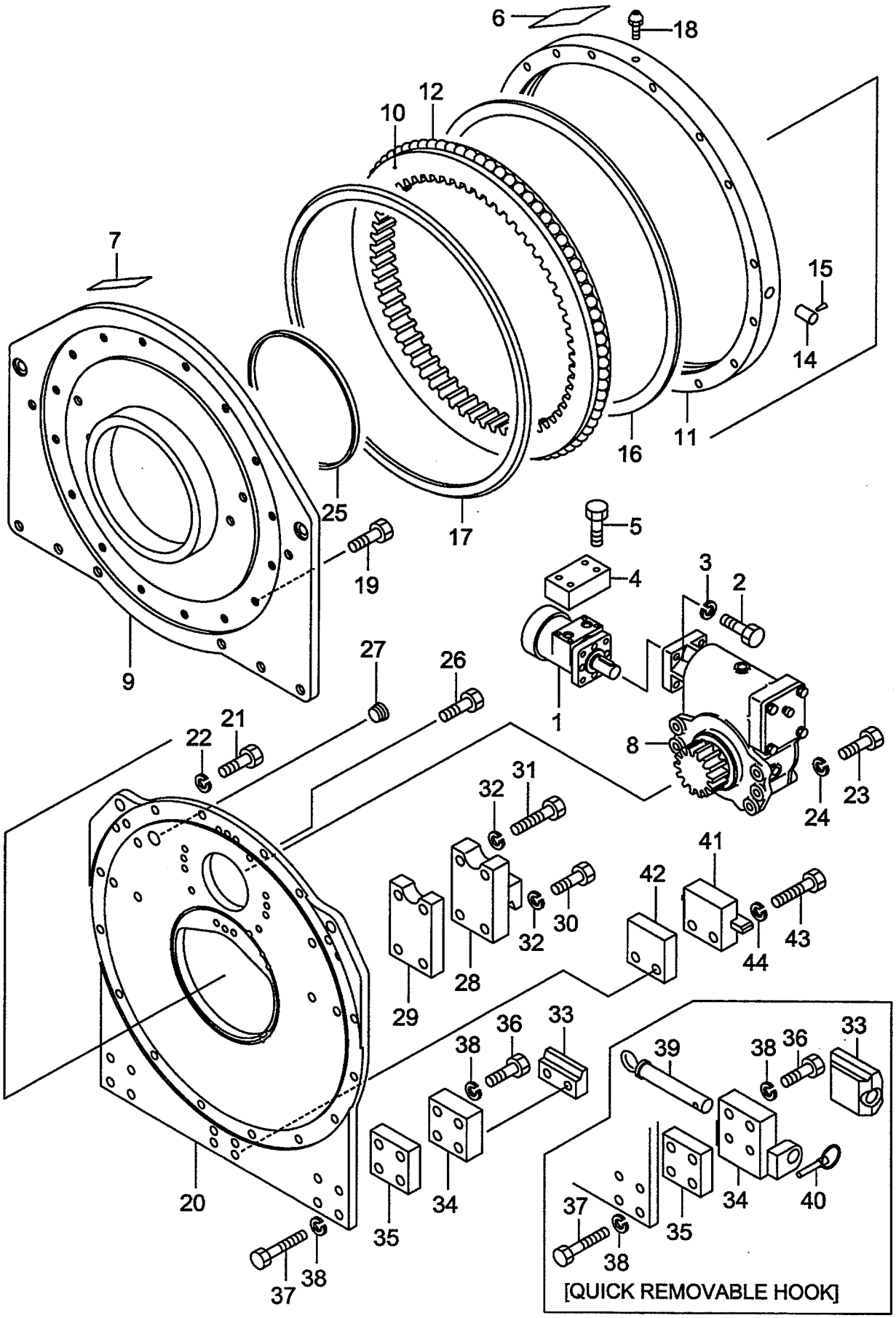

A:RD206

Item No	Part No.	Mark	Description		Req'd	Remarks : Serial No.
40	62039-12751		PIN	ﾋﾟﾝ	2	[QUICK REMOVABLEHOOK]
41	62059-12201		BLOCK	ﾌﾞﾛｯｸ	1	
42	62059-12211		SPACER	ｽﾍﾟｰｻ	1	
43	01100-16085		BOLT	ﾎﾞﾙﾄ	2	
44	02010-00016		WASHER	ﾜｯｼｬ	2	

FIG.103 REDUCTION [RD206]

(A402RD30) ﾘﾀﾞｸｼｮﾝ

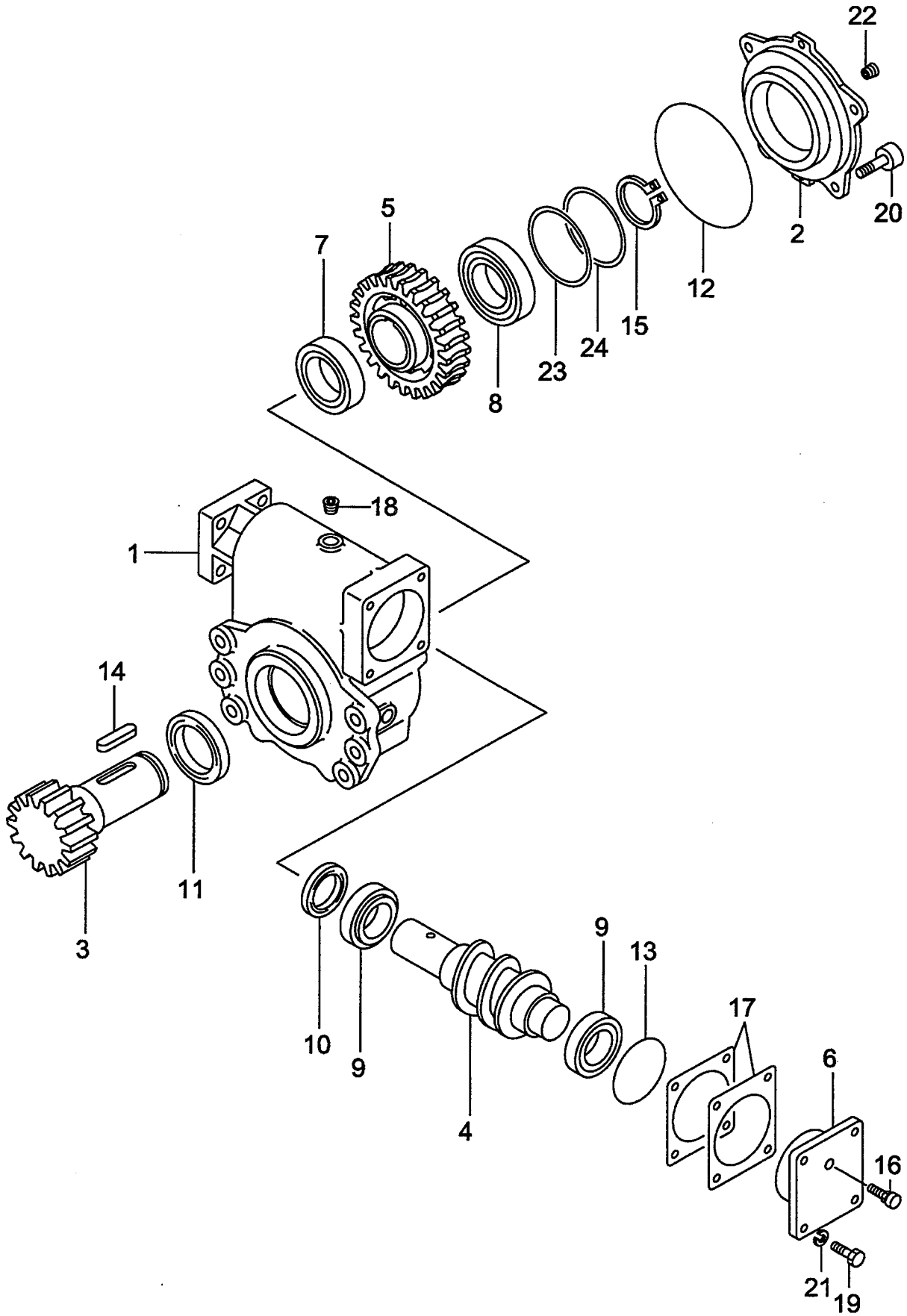

A:RD206

Item No	Part No.	Mark	Description		Req'd	Remarks : Serial No.
A1	62159-10201		REDUCTION-ASSY	ﾘﾀﾞｸｼｮﾝｱｯｾﾝ	1	INC.1-25
1	62159-12082		CASE	ｹｰｽ	1	
2	62159-12111		COVER	ｶﾊﾞｰ	1	
3	62159-12061		SHAFT	ｼｬﾌﾄ	1	
4	62159-12021		WORM	ﾜｰﾑ	1	
5	62159-12031		WHEEL,WORM	ﾎｲｰﾙ	1	
6	62159-12101		CAP	ｷｬｯﾌﾟ	1	
7	03006-00210		BRG	ﾍﾞｱﾘﾝｸﾞ	1	
8	03000-06210		BRG	ﾍﾞｱﾘﾝｸﾞ	1	
9	03071-32008		BRG	ﾍﾞｱﾘﾝｸﾞ	2	
10	62159-12221		SEAL,OIL	ｼｰﾙ	1	
11	62159-12231		SEAL,OIL	ｼｰﾙ	1	
12	03310-01400		O-RING	Oﾘﾝｸﾞ	1	
13	03310-00750		O-RING	Oﾘﾝｸﾞ	1	
14	62159-12211		KEY	ｷｰ	2	
15	02100-00050		RING,SNAP	ｽﾅｯﾌﾟﾘﾝｸﾞ	1	
16	90106-65690		BREATHER,AIR	ﾌﾞﾘｰｻﾞ	1	
17	62159-12201		SHIM	ｼﾑ	AR	
18	24329-45541		PLUG	ﾌﾟﾗｸﾞ	4	
19	01106-10025		BOLT	ﾎﾞﾙﾄ	4	
20	62159-12241		BOLT	ﾎﾞﾙﾄ	4	
21	02011-00010		WASHER	ﾜｯｼｬ	4	
22	22518-40151		PLUG	ﾌﾟﾗｸﾞ	1	
23	62159-12551		SHIM	ｼﾑ	AR	
24	62159-12561		SHIM	ｼﾑ	AR	
25	23870-52871	+	PLUG	ﾌﾟﾗｸﾞ	1	

FIG.104 HYDRAULIC LINE (CONNECTOR-MOTOR)

(A402RD40) ﾊｲﾄﾞﾛﾘｯｸﾗｲﾝ (ｺﾈｸﾀｰﾓｰﾀ)

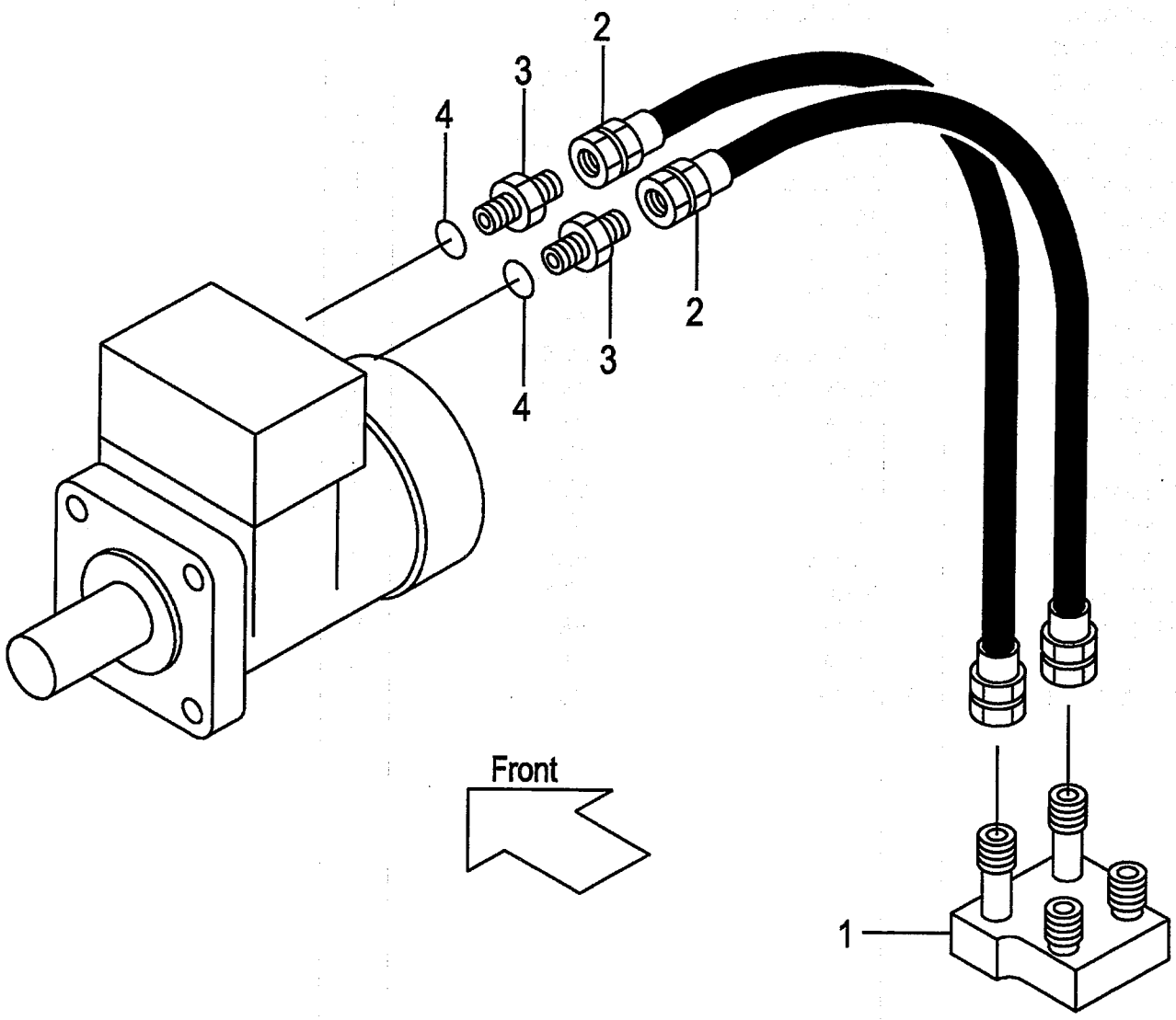

CONTROL VALVE -CONNECTOR	
AP021F	AP221F
AP121F	

FIG.104
(A402RD40)

A:RD206(VM)

Item No	Part No.	Mark	Description		Req'd	Remarks : Serial No.
1	63110-14661		STUD	ｽﾀｯﾄﾞ	1	
2	63130-21070		HOSE	ﾎｰｽ	2	
3	04134-00303		NIPPLE	ﾆｯﾌﾟﾙ	2	
4	03320-00140		O-RING	Oﾘﾝｸﾞ	2	
5	63110-18661	+	STUD	ｽﾀｯﾄﾞ	2	
6	62059-12501	+	GUIDE	ｶﾞｲﾄﾞ	2	

FIG.105 HYDRAULIC LINE (CONNECTOR-MOTOR)[VM/4DK]

(A402RD50) ﾊｲﾄﾞﾛﾘｯｸﾗｲﾝ (ｺﾈｸﾀｰﾓｰﾀ)

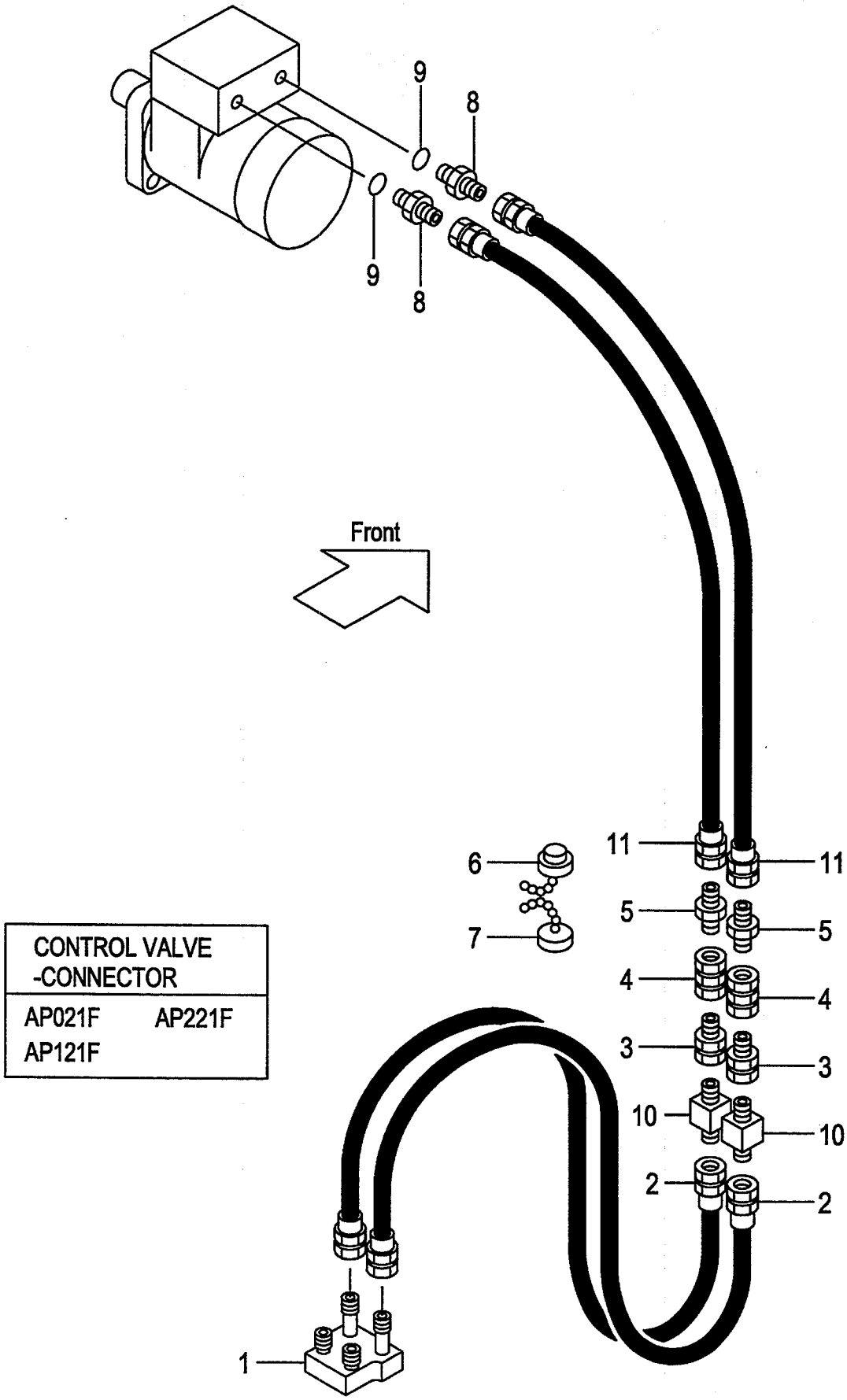

CONTROL VALVE -CONNECTOR	
AP021F	AP221F
AP121F	

A:RD206(VM)

Item No	Part No.	Mark	Description		Req'd	Remarks : Serial No.
1	63110-14661		STUD	ｽﾀｯﾄﾞ	1	[4DK]
2	63130-21030		HOSE	ﾎｰｽ	2	[4DK]
3	04138-00303		UNION	ﾕﾆｵﾝ	2	[4DK]
4	50226-29111		COUPLING	ｶｯﾌﾟﾘﾝｸﾞ	2	[4DK]
5	04137-00303		NIPPLE	ﾆｯﾌﾟﾙ	2	[4DK]
6	63130-14061		PLUG	ﾌﾟﾗｸﾞ	2	[4DK]
7	63130-14071		CAP	ｷｬｯﾌﾟ	2	[4DK]
8	04134-00303		NIPPLE	ﾆｯﾌﾟﾙ	2	[4DK]
9	03320-00140		O-RING	Oﾘﾝｸﾞ	2	[4DK]
10	63110-18661		STUD	ｽﾀｯﾄﾞ	2	[4DK]
11	62233-45001		HOSE	ﾎｰｽ	2	[4DK]

FIG.106 HYDRAULIC LINE (CONNECTOR-MOTOR)[VFM,VFHM]

(A402RD60) ﾊｲﾄﾞﾛﾘｯｸﾗｲﾝ (ｺﾈｸﾀｰﾓｰﾀ)

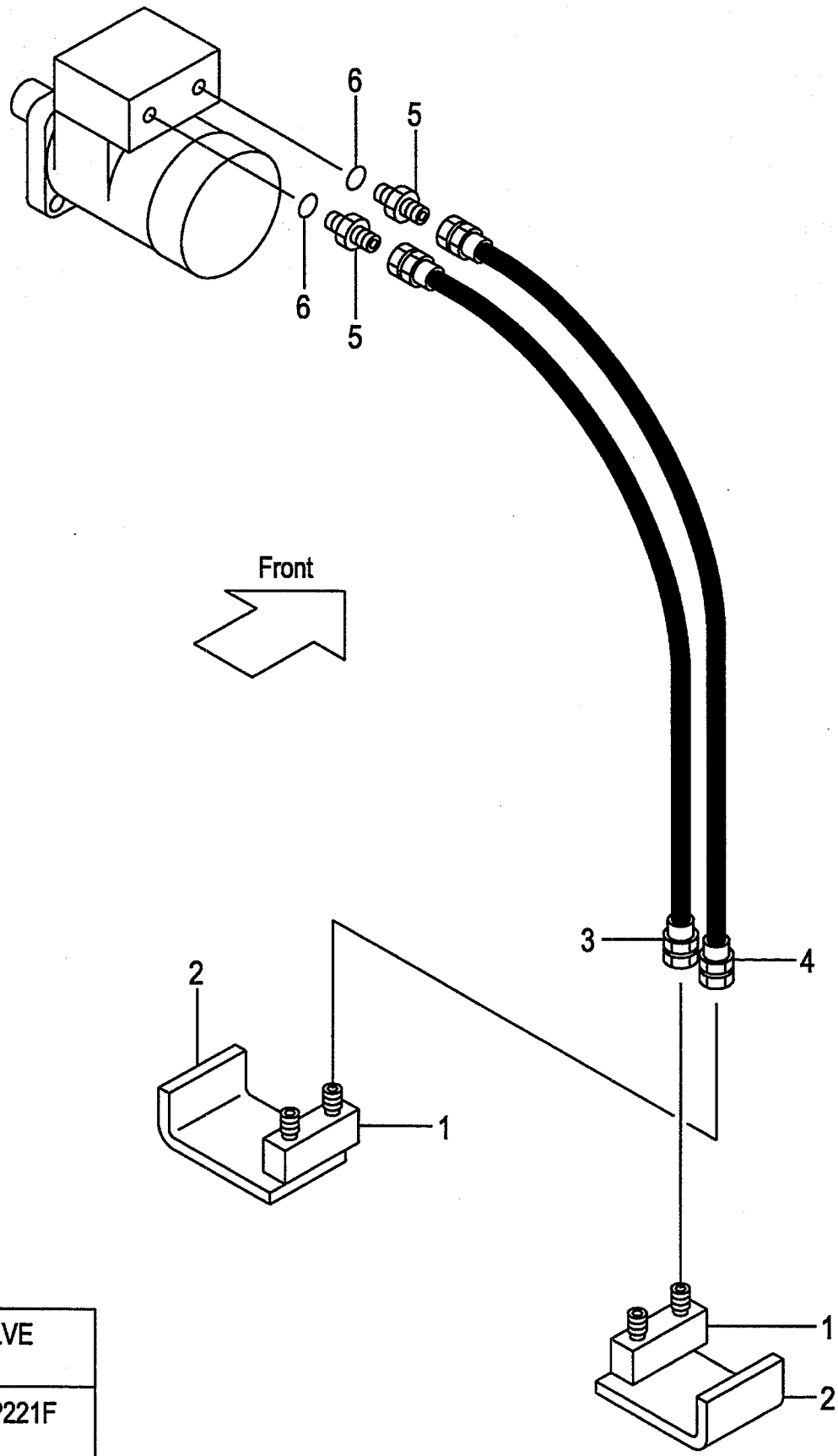

CONTROL VALVE -CONNECTOR	
AP021F	AP221F
AP121F	

A:RD206(VFM) RD206(VFHM)

Item No	Part No.	Mark	Description		Req'd	Remarks : Serial No.
1	62150-12841		STUD	ｽﾀｯﾄﾞ	2	
2	62150-12001		ANGLE	ｱﾝｸﾞﾙ	2	[VFM]
3	63130-21075		HOSE	ﾎｰｽ	1	
4	63130-21100		HOSE	ﾎｰｽ	1	
5	04134-00303		NIPPLE	ﾆｯﾌﾟﾙ	2	
6	03320-00140		O-RING	Oﾘﾝｸﾞ	2	
7	62150-12861	+	PLATE	ﾌﾟﾚｰﾄ	2	[VFHM]
8	62150-12771	+	BRACKET	ﾌﾞﾗｹｯﾄ	2	[VFHM]
9	62059-12501	+	GUIDE	ｶﾞｲﾄﾞ	2	

FIG.107 HYDRAULIC LINE (CONNECTOR-MOTOR)[VFM/4DK,VFHM/4DK]

(A402RD70) ﾊｲﾄﾞﾛﾘｯｸﾗｲﾝ (ｺﾈｸﾀｰﾓｰﾀ)

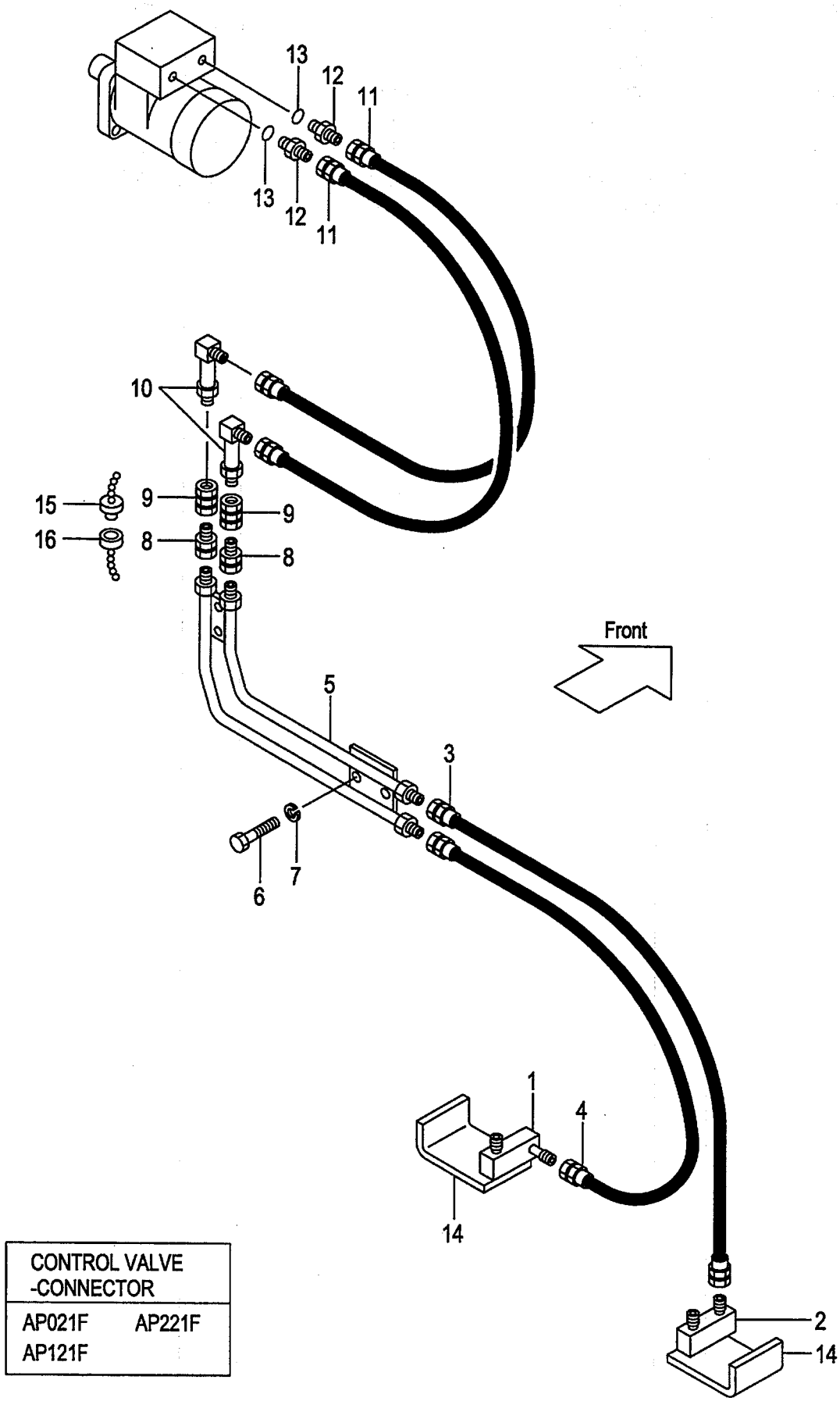

CONTROL VALVE -CONNECTOR	
AP021F	AP221F
AP121F	

A:RD206(VFM) RD206(VFHM)

Item No	Part No.	Mark	Description		Req'd	Remarks : Serial No.
1	63110-14751		STUD	ｽﾀｯﾄﾞ	1	[4DK]
2	62150-12841		STUD	ｽﾀｯﾄﾞ	1	[4DK]
3	63130-21040		HOSE	ﾎｰｽ	1	[VFM/4DK]
-	63130-21035		HOSE	ﾎｰｽ	1	[VFHM/4DK]
4	63130-21050		HOSE	ﾎｰｽ	1	[VFM/4DK]
-	63130-21045		HOSE	ﾎｰｽ	1	[VFHM/4DK]
5	62150-12701		PIPE	ﾊﾟｲﾌﾟ	1	[4DK]
6	01100-08016		BOLT	ﾎﾞﾙﾄ	4	[4DK]
7	02010-00008		WASHER	ﾜｯｼｬ	4	[4DK]
8	04138-00303		UNION	ﾕﾆｵﾝ	2	[4DK]
9	50226-29111		COUPLING	ｶｯﾌﾟﾘﾝｸﾞ	2	[4DK]
10	53110-12131		ELBOW	ｴﾙﾎﾞ	2	[4DK]
11	63130-21140		HOSE	ﾎｰｽ	2	[4DK]
12	04134-00303		NIPPLE	ﾆｯﾌﾟﾙ	2	[4DK]
13	03320-00140		O-RING	Oﾘﾝｸﾞ	2	[4DK]
14	62150-12001		ANGLE	ｱﾝｸﾞﾙ	2	[VFM/4DK]
15	63130-14061		PLUG	ﾌﾟﾗｸﾞ	2	[4DK]
16	63130-14071		CAP	ｷｬｯﾌﾟ	2	[4DK]
17	62150-12771	+	BRACKET	ﾌﾞﾗｹｯﾄ	2	[VFM/4DK]
18	62150-12861	+	PLATE	ﾌﾟﾚｰﾄ	1	[VFHM/4DK]
19	62059-12501	+	GUIDE	ｶﾞｲﾄﾞ	2	[4DK]

FIG.108 HYDRAULIC LINE (CONNECTOR-MOTOR)[VFM/A4R,VFHM/A4R]

(A402RD80) ﾊｲﾄﾞﾛﾘｯｸﾗｲﾝ (ｺﾈｸﾀｰﾓｰﾀ)

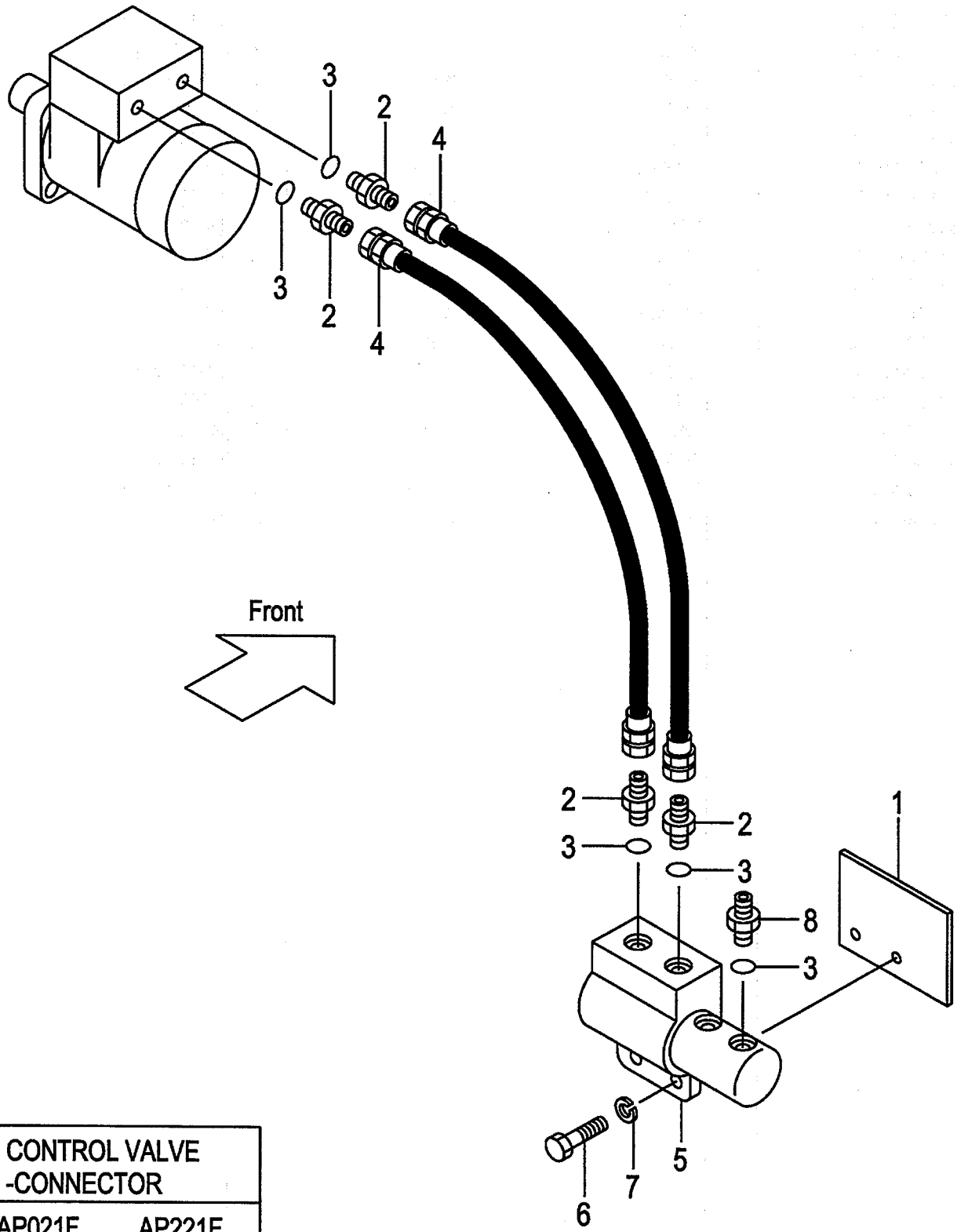

CONTROL VALVE -CONNECTOR	
AP021F	AP221F
AP121F	

A:RD206(VFM) RD206(VFHM)

Item No	Part No.	Mark	Description		Req'd	Remarks : Serial No.
1	62150-12791		BRACKET	ﾌﾞﾗｹｯﾄ	1	[A4R]
2	04134-00303		NIPPLE	ﾆｯﾌﾟﾙ	4	[A4R]
3	03320-00140		O-RING	Oﾘﾝｸﾞ	6	[A4R]
4	63130-21040		HOSE	ﾎｰｽ	2	[A4R]
5	63130-15083		BLOCK,JUNCTION	ﾌﾞﾛｯｸ	1	[A4R]SEE FIG.110
6	01100-12020		BOLT	ﾎﾞﾙﾄ	2	[A4R]
7	02010-00020		WASHER	ﾜｯｼｬ	2	[A4R]
8	63110-12281		NIPPLE	ﾆｯﾌﾟﾙ	2	[A4R]

HYDRAULIC LINE (CONNECTOR-MOTOR)

FIG.109 **[VFM/A4R/4DK,VFHM/A4R/4DK]**

(A402RD90) ﾊｲﾄﾞﾛﾘｯｸﾗｲﾝ (ｺﾈｸﾀｰﾓｰﾀ)

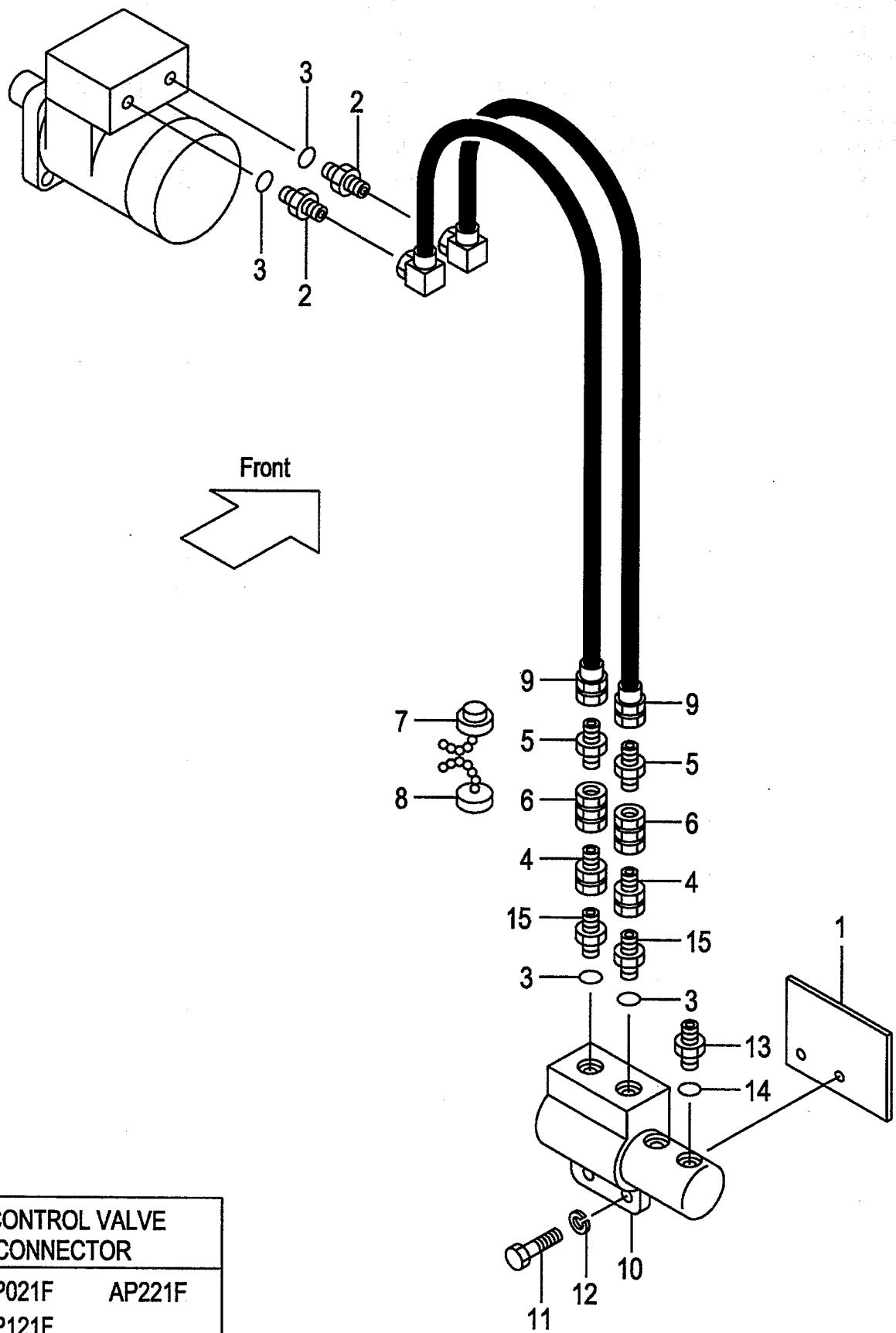

CONTROL VALVE -CONNECTOR	
AP021F	AP221F
AP121F	

A:RD206(VFM) RD206(VFHM)

Item No	Part No.	Mark	Description		Req'd	Remarks : Serial No.
1	62150-12791		BRACKET	ﾌﾞﾗｹｯﾄ	1	[A4R/4DK]
2	04134-00303		NIPPLE	ﾆｯﾌﾟﾙ	2	[A4R/4DK]
3	03320-00140		O-RING	Oﾘﾝｸﾞ	4	[A4R/4DK]
4	04138-00303		UNION	ﾕﾆｵﾝ	2	[A4R/4DK]
5	04137-00303		NIPPLE	ﾆｯﾌﾟﾙ	2	[A4R/4DK]
6	50226-29111		COUPLING	ｶｯﾌﾟﾘﾝｸﾞ	2	[A4R/4DK]
7	63130-14061		PLUG	ﾌﾟﾗｸﾞ	2	[A4R/4DK]
8	63130-14071		CAP	ｷｬｯﾌﾟ	2	[A4R/4DK]
9	63153-82701		HOSE	ﾎｰｽ	2	[A4R/4DK]
10	63130-15083		BLOCK,JUNCTION	ﾌﾞﾛｯｸ	1	[A4R/4DK]SEE FIG.110
11	01100-12035		BOLT	ﾎﾞﾙﾄ	2	[A4R/4DK]
12	02010-00012		WASHER	ﾜｯｼｬ	2	[A4R/4DK]
13	63110-12281		NIPPLE	ﾆｯﾌﾟﾙ	2	[A4R/4DK]
14	03320-00140		O-RING	Oﾘﾝｸﾞ	2	[A4R/4DK]
15	53110-12041		NIPPLE	ﾆｯﾌﾟﾙ	2	[A4R/4DK]

FIG.110 JUNCTION BLOCK [RD206]

(A402RDA0) ｼﾞｬﾝｸｼｮﾝﾌﾞﾛｯｸ

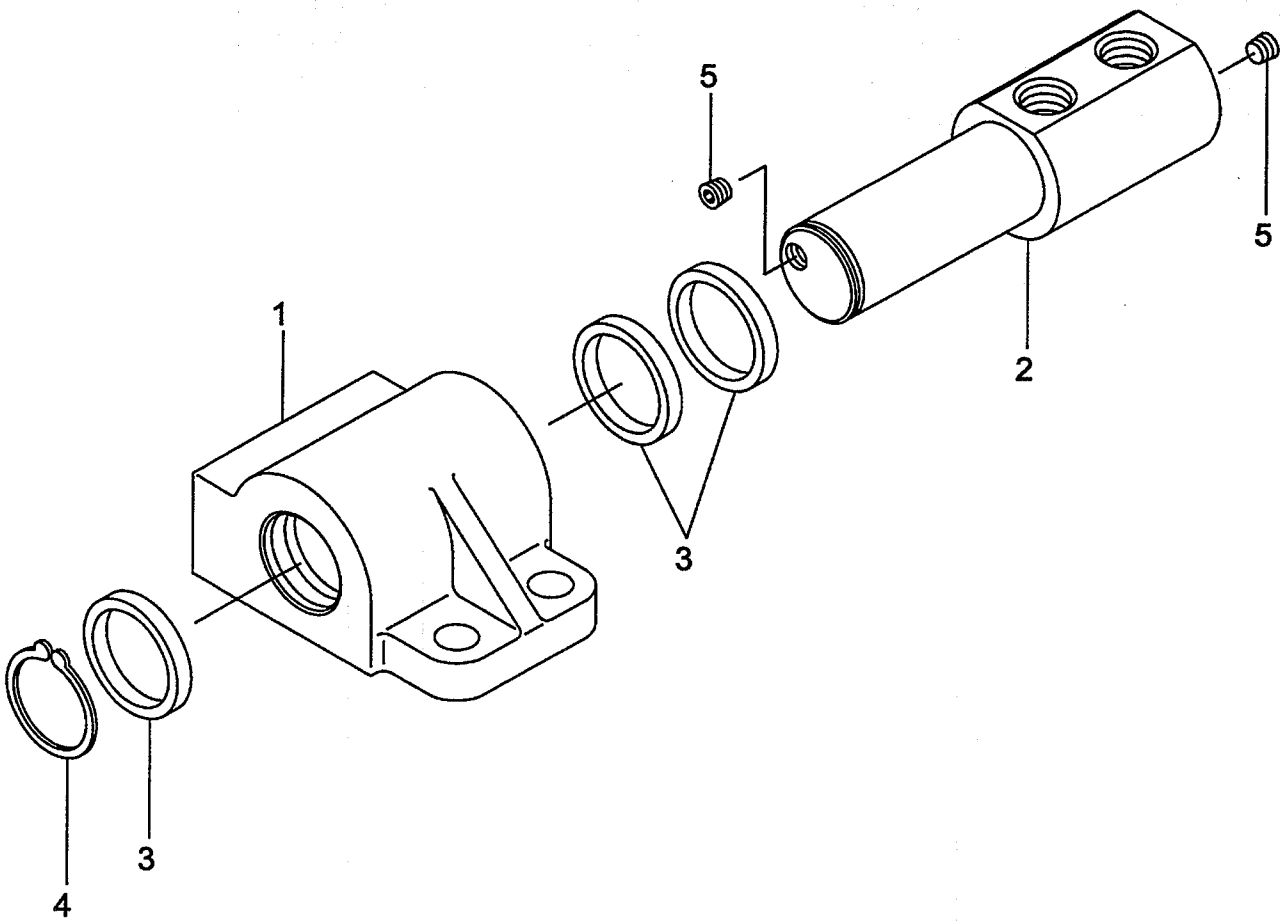

A:RD206(VFM) RD206(VFHM)

Item No	Part No.	Mark	Description		Req'd	Remarks : Serial No.
A1	63130-15083		BLOCK-ASSY,JUNCTION	ｼﾞｬﾝｸｼｮﾝﾌﾞﾛｯｸｱｯｾﾝ	1	INC.1-5
1	63110-11521		HOUSING	ﾊｳｼﾞﾝｸﾞ	1	
2	63110-11531		SHAFT	ｼｬﾌﾄ	1	
3	63110-16301		SEAL	ｼｰﾙ	3	
4	02100-00030		RING,SNAP	ｽﾅｯﾌﾟﾘﾝｸﾞ	1	
5	63110-14511		PLUG	ﾌﾟﾗｸﾞ	2	

FIG.111 MOTOR[RD206]

(A402RDW0) モータ

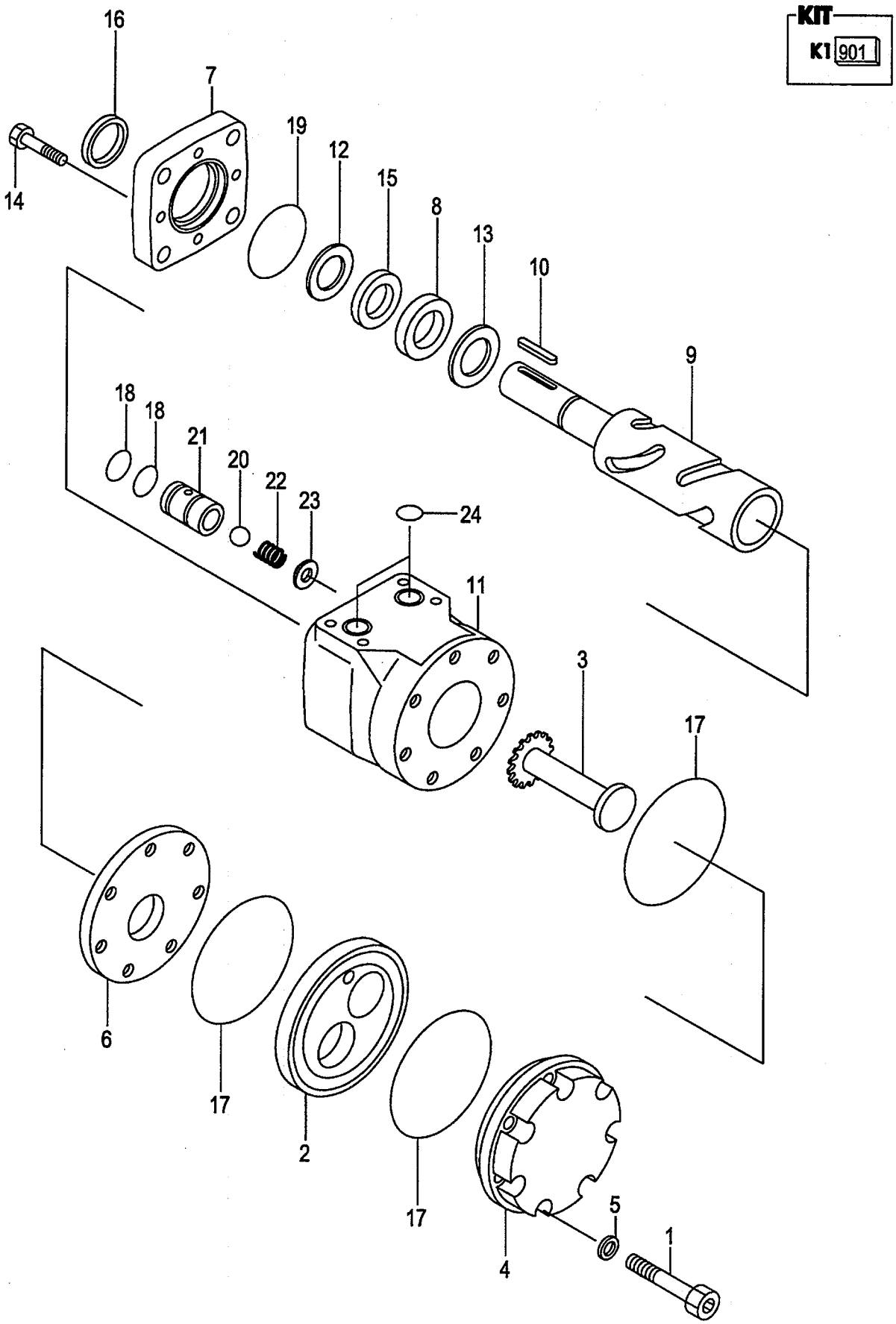

FIG.111
(A402RDW0)

A:RD206

Item No	Part No.	Mark	Description		Req'd	Remarks : Serial No.
A1	62059-12801		MOTOR-ASSY	ﾓｰﾀｱｯｾﾝ	1	INC.1-24
-	63059-12801		MOTOR-ASSY	ﾓｰﾀｱｯｾﾝ	1	[HIGH TORQUE] INC.1-24
901	62159-13281	K1	KIT,SEAL	ｼｰﾙｷｯﾄ	1	INC.5,15-19,24
1	NO PART NO.	#	SCREW	ｽｸﾘｭ	7	
2	NO PART NO.	#	GYRATOR	ｼﾞｬｲﾚｰﾀ	1	
-	NO PART NO.	#	GYRATOR	ｼﾞｬｲﾚｰﾀ	1	[HIGH TORQUE]
3	NO PART NO.	#	DRIVE	ﾄﾞﾗｲﾌﾞ	1	
4	NO PART NO.	#	CAP	ｷｬｯﾌﾟ	1	
5	NO PART NO.	##	WASHER	ﾜｯｼｬ	7	
6	62159-13251		SPACER	ｽﾍﾟｰｻ	1	
7	62159-13041		FLANGE	ﾌﾗﾝｼﾞ	1	
8	62159-13051		RACE	ﾚｰｽ	1	
9	62159-13061		SHAFT,OUTPUT	ｼｬﾌﾄ	1	
10	62159-13101		KEY	ｷｰ	1	
11	62159-13261		HOUSING	ﾊｳｼﾞﾝｸﾞ	1	
12	NO PART NO.	#	RING	ﾘﾝｸﾞ	1	
13	62159-13081		BEARING	ﾍﾞｱﾘﾝｸﾞ	1	
14	62159-13091		SCREW	ｽｸﾘｭ	4	
15	NO PART NO.	#*	SEAL,OIL	ｼｰﾙ	1	
16	NO PART NO.	#*	SEAL,DUST	ｼｰﾙ	1	
17	NO PART NO.	#*	O-RING	Oﾘﾝｸﾞ	3	
18	NO PART NO.	#*	O-RING	Oﾘﾝｸﾞ	4	
19	NO PART NO.	#*	O-RING	Oﾘﾝｸﾞ	1	
A2	62159-13161		VALVE-ASSY,CHECK	ﾁｪｯｸﾊﾞﾙﾌﾞｱｯｾﾝ	2	INC.20-23
20	NO PART NO.	#	BALL	ﾎﾞｰﾙ	2	
21	NO PART NO.	#	BODY	ﾎﾞﾃﾞｨ	2	
22	NO PART NO.	#	SPRING	ｽﾌﾟﾘﾝｸﾞ	2	
23	NO PART NO.	#	WASHER	ﾜｯｼｬ	2	
24	NO PART NO.	#*	O-RING	Oﾘﾝｸﾞ	2	

FIG.112 ROTATING DEVICE [RD21C]

(A502RD10) ローテーティングデバイス

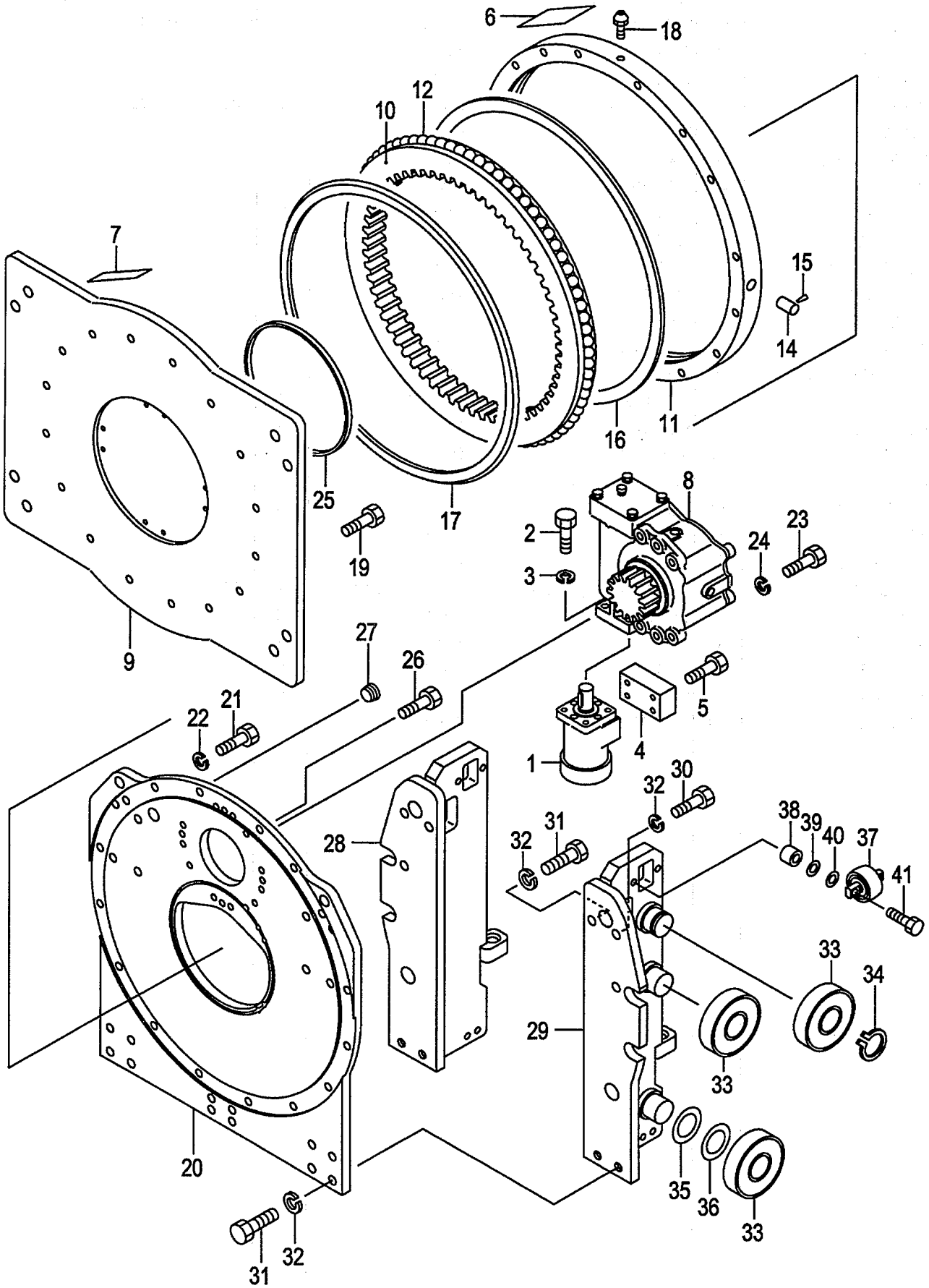

A:RD21C(VM/J)

Item No	Part No.	Mark	Description		Req'd	Remarks : Serial No.
A1	621C9-10002		DEVICE-ASSY,ROTATING		1	INC.1-41
			ローテーティングデバイスアッセン			
-	621C9-10012		DEVICE-ASSY,ROTATING		1	[HIGH TORQUE] INC.1-41
			ローテーティングデバイスアッセン			
1	62059-12801		MOTOR	モータ	1	SEE FIG.115
-	63059-12801		MOTOR	モータ	1	[HIGH TORQUE]SEE FIG.115
2	01110-10025		BOLT	ボルト	4	
3	02010-00010		WASHER	ワッシャ	4	
4	62159-12702		VALVE,COUNT.,BALANCE	バルブ	1	
5	01100-08045		BOLT	ボルト	4	
6	62159-12501		DECAL	デカル	1	
7	62159-12511		DECAL	デカル	4	
A2	62169-10101		SUB-ASSY,DEVICE,ROT.		1	INC.8-27
			ローテーティングデバイスサブアッセン			
8	62159-10201		REDUCTION	リダクション	1	SEE FIG.113
9	62169-12001		PLATE,ROTATING	プレート	1	
A3	62159-12071		BRG-ASSY,ROTATING		1	INC.10-18
			ローテーティングベアリングアッセン			
10	NO PART NO.		WHEEL,INNER	ホイール	1	
11	NO PART NO.		WHEEL,OUTER	ホイール	1	
12	03190-00026		BALL	ボール	77	
13	NO PART NO.	+	SPACER	スペーサ	77	
14	NO PART NO.		CAP	キャップ	1	
15	NO PART NO.		PIN	ピン	1	
16	62159-12261		SEAL	シール	1	
17	62159-12271		SEAL	シール	1	
18	04901-00100		FITTING	フィッティング	1	
19	01170-14045		BOLT	ボルト	16	
20	62159-12132		PLATE,BASE	プレート	1	
21	01103-14045		BOLT	ボルト	14	
22	02011-00014		WASHER	ワッシャ	14	
23	01103-12035		BOLT	ボルト	6	
24	02011-00012		WASHER	ワッシャ	6	
25	62159-12231		FELT	フェルト	1	
26	01170-14030		BOLT	ボルト	2	
27	25073-00031		PLUG	プラグ	1	
28	621B9-10102		BRACKET,LIFT,RH	ブラケット	1	
29	621B9-10112		BRACKET,LIFT,LH	ブラケット	1	
30	01103-16030		BOLT	ボルト	4	
31	01103-16040		BOLT	ボルト	6	
32	02011-00016		WASHER	ワッシャ	10	
33	277P8-22051		ROLLER,END,SMALL	ローラ	6	
-	277P8-22061		ROLLER,END,LARGE	ローラ	(6)	
34	02100-00045		RING,SNAP	スナップリング	2	
35	277P8-22071		SHIM,T-0.5	シム	5	
36	277P8-22081		SHIM,T-1.0	シム	5	
37	23458-32052		ROLLER,SIDE	ローラ	2	
38	22548-34031		SPACER	スペーサ	4	
39	22548-34051		SHIM	シム	5	
40	22548-34061		SHIM	シム	5	

FIG.112 ROTATING DEVICE [RD21C]

(A502RD10) ローテーティングデバイス

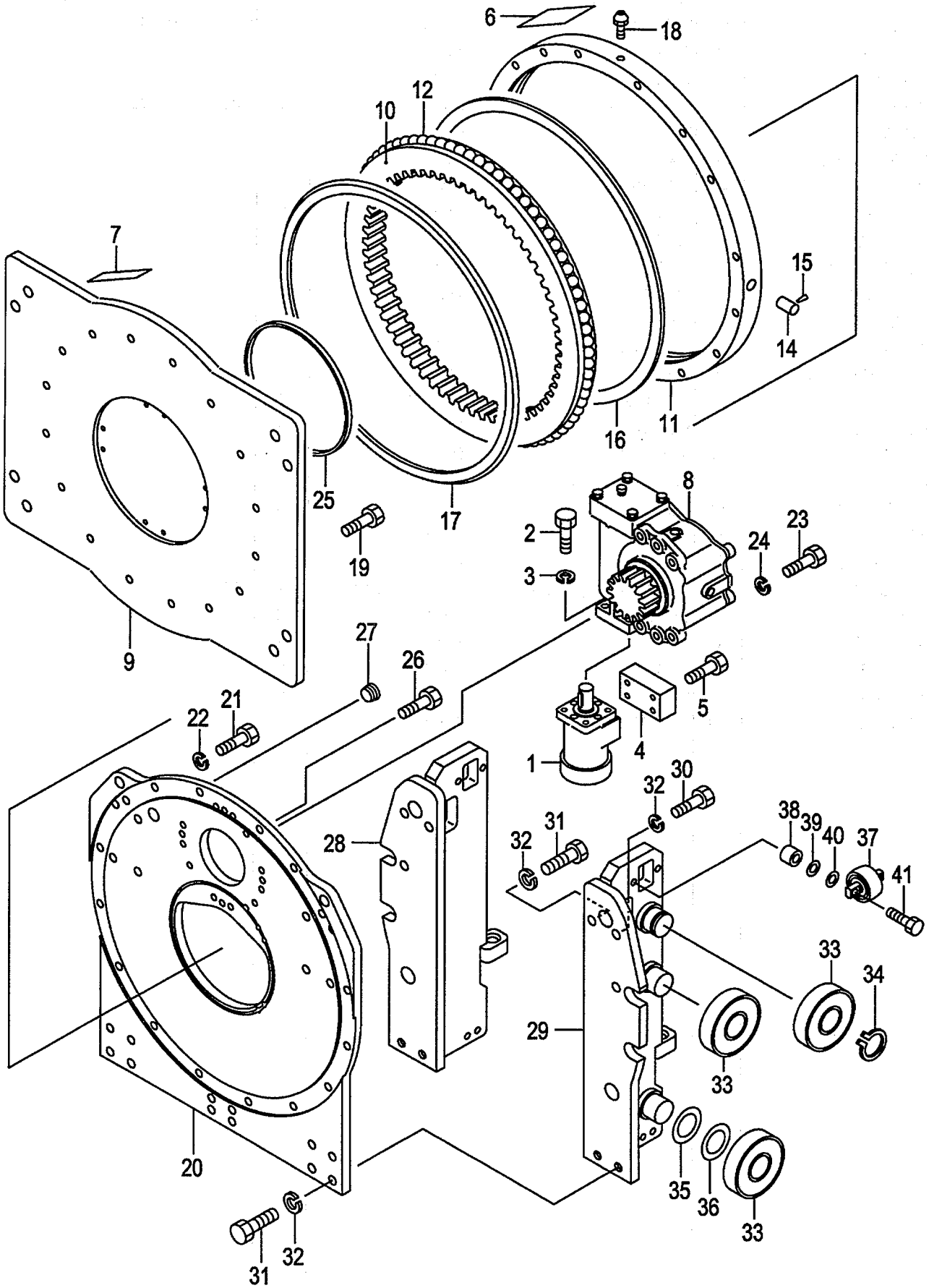

FIG.112
(A502RD10)

A:RD21C(VM/J)

Item No	Part No.	Mark	Description	Req'd	Remarks : Serial No.
41	01184-12050		BOLT & WASHER ﾎﾞﾙﾄ&ﾜｯｼｬ	4	

FIG.113 REDUCTION [RD21C]

(A502RD20) ﾘﾀﾞｸｼｮﾝ

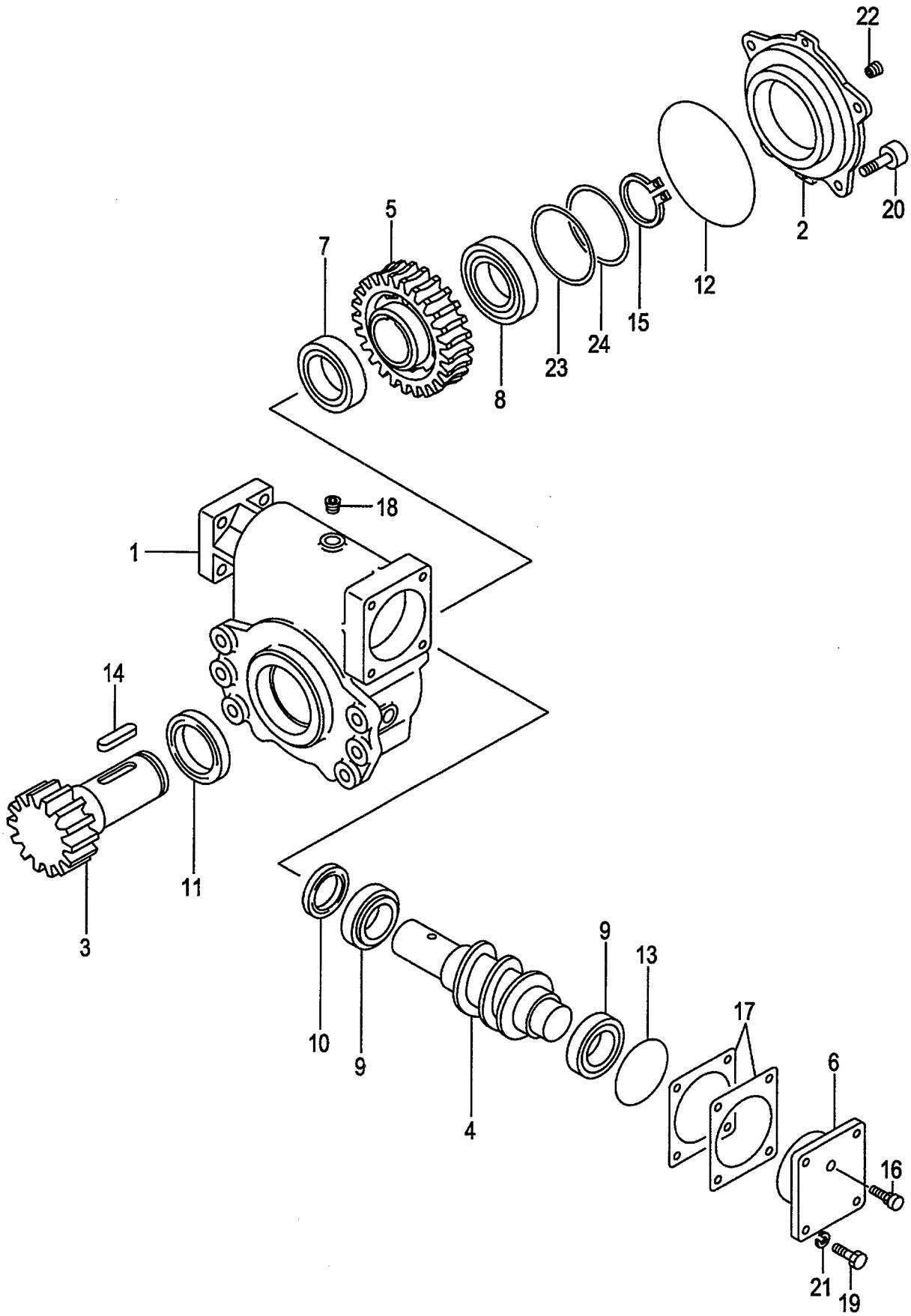

A:RD21C(VM/J)

Item No	Part No.	Mark	Description		Req'd	Remarks : Serial No.
A1	62159-10201		REDUCTION-ASSY	ﾘﾀﾞｸｼｮﾝｱｯｾﾝ	1	INC.1-25
1	62159-12082		CASE	ｹｰｽ	1	
2	62159-12111		COVER	ｶﾊﾞｰ	1	
3	62159-12061		SHAFT	ｼｬﾌﾄ	1	
4	62159-12021		WORM	ﾜｰﾑ	1	
5	62159-12031		WHEEL,WORM	ﾎｲｰﾙ	1	
6	62159-12101		CAP	ｷｬｯﾌﾟ	1	
7	03006-00210		BRG	ﾍﾞｱﾘﾝｸﾞ	1	
8	03000-06210		BRG	ﾍﾞｱﾘﾝｸﾞ	1	
9	03071-32008		BRG	ﾍﾞｱﾘﾝｸﾞ	2	
10	62159-12221		SEAL,OIL	ｼｰﾙ	1	
11	62159-12231		SEAL,OIL	ｼｰﾙ	1	
12	03310-01400		O-RING	Oﾘﾝｸﾞ	1	
13	03310-00750		O-RING	Oﾘﾝｸﾞ	1	
14	62159-12211		KEY	ｷｰ	2	
15	02100-00050		RING,SNAP	ｽﾅｯﾌﾟﾘﾝｸﾞ	1	
16	90106-65690		BREATHER,AIR	ﾌﾞﾘｰｻﾞ	1	
17	62159-12201		SHIM	ｼﾑ	AR	
18	24329-45541		PLUG	ﾌﾟﾗｸﾞ	4	
19	01106-10025		BOLT	ﾎﾞﾙﾄ	4	
20	62159-12241		BOLT	ﾎﾞﾙﾄ	4	
21	02011-00010		WASHER	ﾜｯｼｬ	4	
22	22518-40151		PLUG	ﾌﾟﾗｸﾞ	1	
23	62159-12551		SHIM	ｼﾑ	AR	
24	62159-12561		SHIM	ｼﾑ	AR	
25	23870-52871	+	PLUG	ﾌﾟﾗｸﾞ	1	

FIG.114 HYDRAULIC LINE (CONNECTOR-MOTOR)

(A502RD30) ﾊｲﾄﾞﾛﾘｯｸﾗｲﾝ (ｺﾈｸﾀｰﾓｰﾀ)

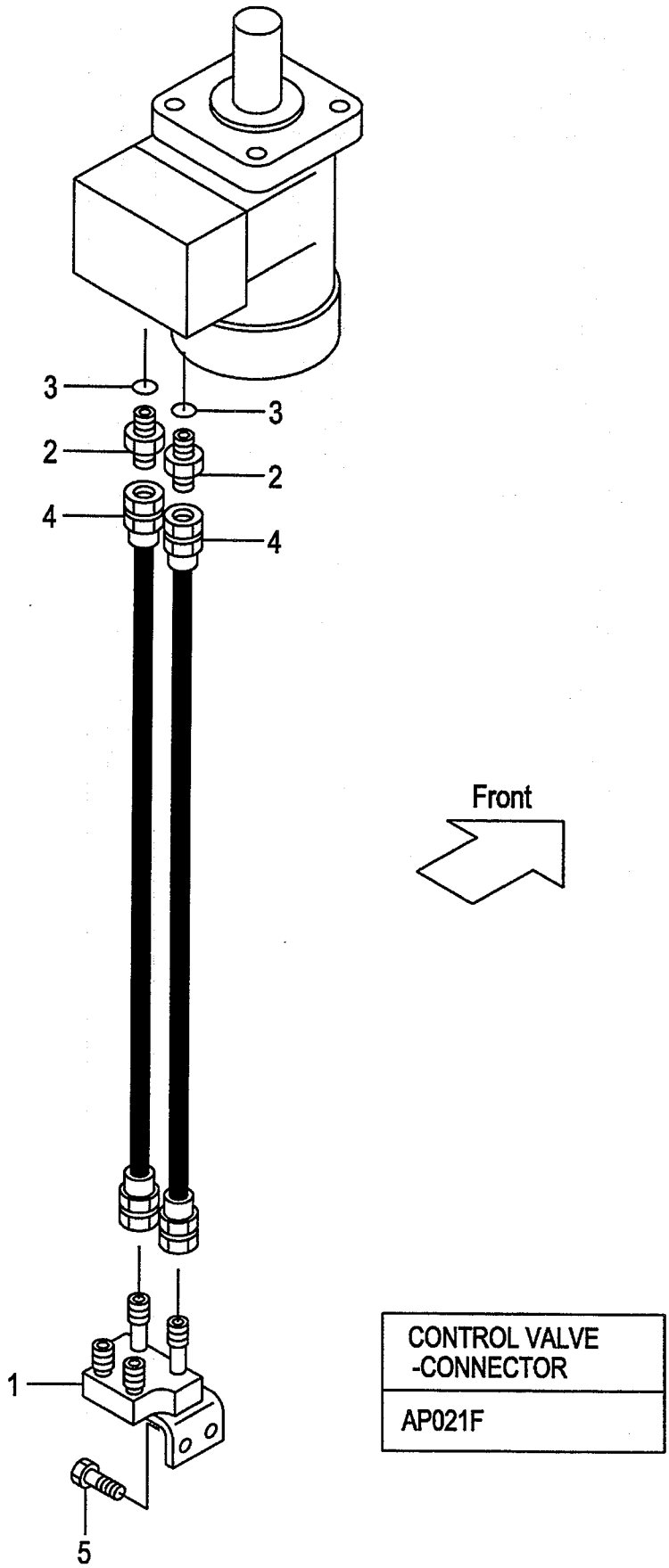

A:RD21C(VM/J)

Item No	Part No.	Mark	Description		Req'd	Remarks : Serial No.
1	621F0-12001		STUD	ｽﾀｯﾄﾞ	1	
2	04134-00303		NIPPLE	ﾆｯﾌﾟﾙ	2	
3	03320-00140		O-RING	Oﾘﾝｸﾞ	2	
4	63130-21030		HOSE	ﾎｰｽ	2	
5	01184-10025		BOLT & WASHER	ﾎﾞﾙﾄ&ﾜｯｼｬ	2	

FIG.115 MOTOR [RD21C]

(A502RD40) モータ

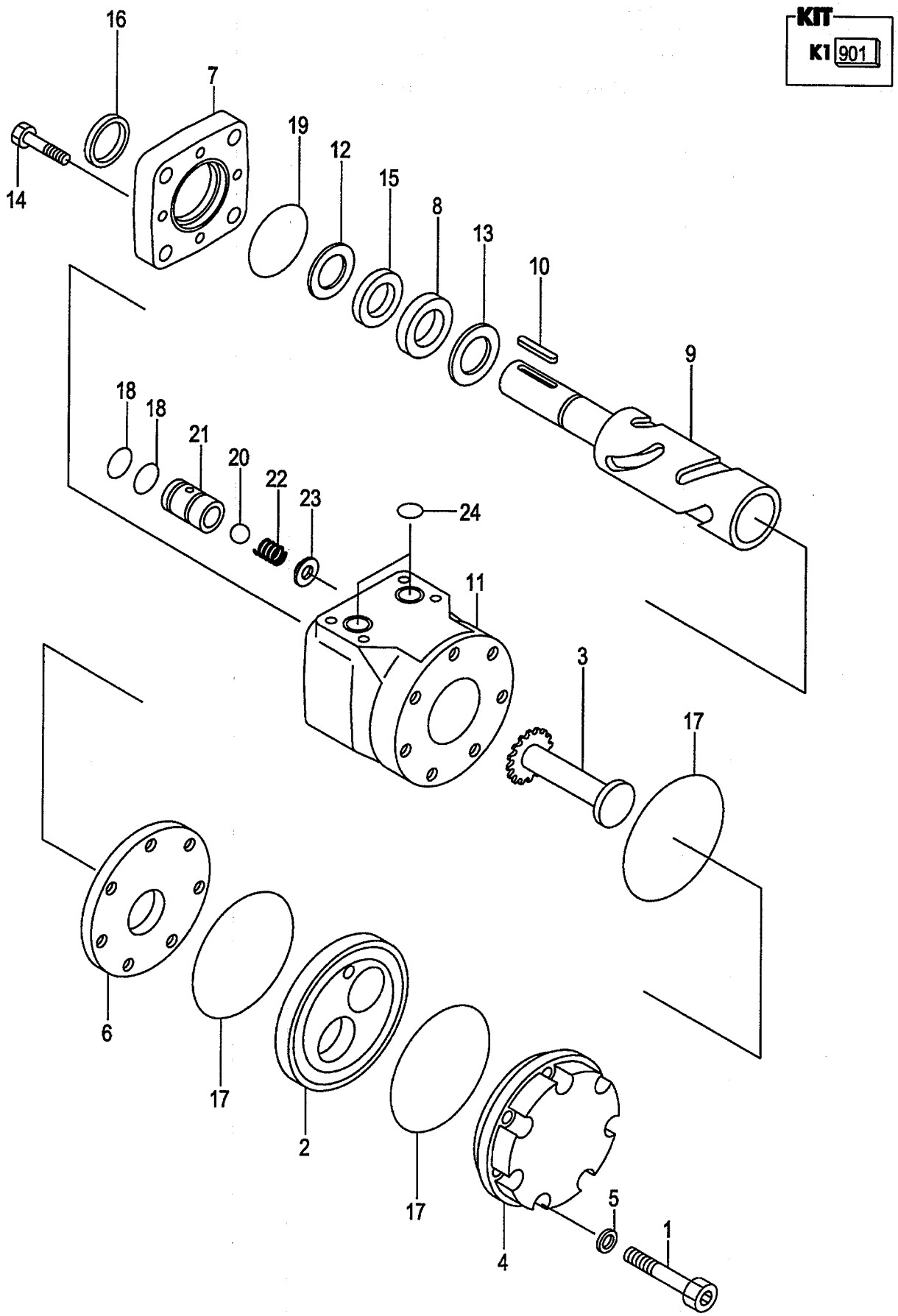

A:RD21C(VM/J)

Item No	Part No.	Mark	Description		Req'd	Remarks : Serial No.
A1	62059-12801		MOTOR-ASSY	ﾓｰﾀｱｯｾﾝ	1	INC.1-24
-	63059-12801		MOTOR-ASSY	ﾓｰﾀｱｯｾﾝ	1	[HIGH TORQUE] INC.1-24
901	01170-14030	K1	KIT,SEAL	ｼｰﾙｷｯﾄ	1	INC.5,15-19,24
1	NO PART NO.	#	SCREW	ｽｸﾘｭ	7	
2	NO PART NO.	#	GYRATOR	ｼﾞｬｲﾚｰﾀ	1	
-	NO PART NO.	#	GYRATOR	ｼﾞｬｲﾚｰﾀ	1	[HIGH TORQUE]
3	NO PART NO.	#	DRIVE	ﾄﾞﾗｲﾌﾞ	1	
4	NO PART NO.	#	CAP	ｷｬｯﾌﾟ	1	
5	NO PART NO.	*#	WASHER	ﾜｯｼｬ	7	
6	62159-13251		SPACER	ｽﾍﾟｰｻ	1	
7	62159-13041		FLANGE	ﾌﾗﾝｼﾞ	1	
8	62159-13051		RACE	ﾚｰｽ	1	
9	62159-13061		SHAFT,OUTPUT	ｼｬﾌﾄ	1	
10	62159-13101		KEY	ｷｰ	1	
11	62159-13261		HOUSING	ﾊｳｼﾞﾝｸﾞ	1	
12	NO PART NO.	#	RING	ﾘﾝｸﾞ	1	
13	62159-13081		BEARING	ﾍﾞｱﾘﾝｸﾞ	1	
14	62159-13091		SCREW	ｽｸﾘｭ	4	
15	NO PART NO.	#*	SEAL,OIL	ｼｰﾙ	1	
16	NO PART NO.	#*	SEAL,DUST	ｼｰﾙ	1	
17	NO PART NO.	#*	O-RING	Oﾘﾝｸﾞ	3	
18	NO PART NO.	#*	O-RING	Oﾘﾝｸﾞ	4	
19	NO PART NO.	#*	O-RING	Oﾘﾝｸﾞ	1	
A2	62159-13161		VALVE-ASSY,CHECK	ﾁｪｯｸﾊﾞﾙﾌﾞｱｯｾﾝ	2	INC.20-23
20	NO PART NO.	#	BALL	ﾎﾞｰﾙ	2	
21	NO PART NO.	#	BODY	ﾎﾞﾃﾞｨ	2	
22	NO PART NO.	#	SPRING	ｽﾌﾟﾘﾝｸﾞ	2	
23	NO PART NO.	#	WASHER	ﾜｯｼｬ	2	
24	NO PART NO.	#*	O-RING	Oﾘﾝｸﾞ	2	

FIG.116 ROTATING DEVICE [RD306]

(A402RDG0) ﾛｰﾃｰﾃｨﾝｸﾞﾃﾞﾊﾞｲｽ

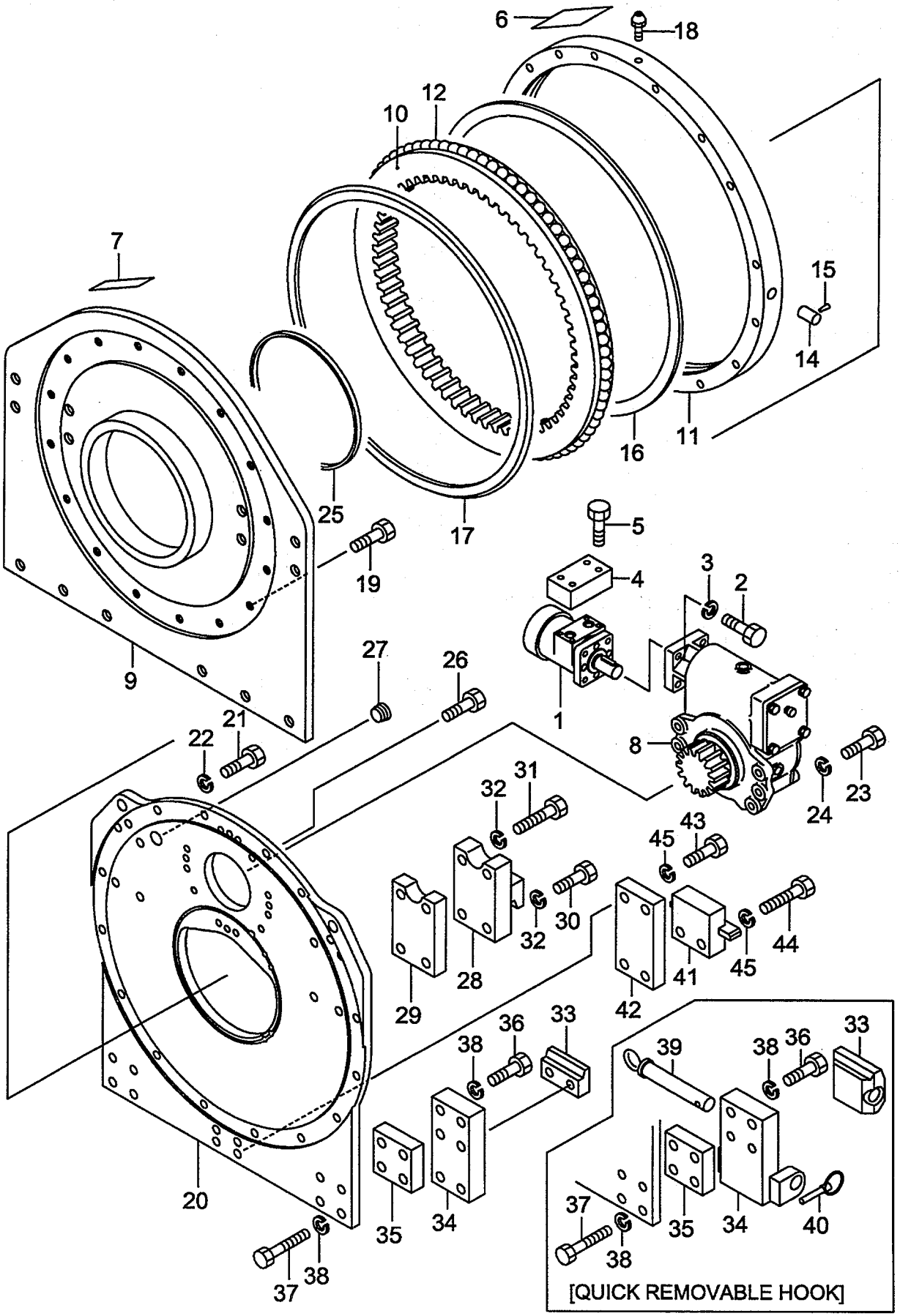

A:RD306

Item No	Part No.	Mark	Description		Req'd	Remarks : Serial No.
A1	63069-10001		DEVICE-ASSY,ROTATING		1	INC.1-45
			ﾛｰﾃｰﾃｨﾝｸﾞﾃﾞﾊﾞｲｽｱｯｾﾝ			
-	63069-10011		DEVICE-ASSY,ROTATING		1	[HIGH TORQUE] INC.1-45
			ﾛｰﾃｰﾃｨﾝｸﾞﾃﾞﾊﾞｲｽｱｯｾﾝ			
1	62059-12801		MOTOR	ﾓｰﾀ	1	SEE FIG.125
-	63059-12801		MOTOR	ﾓｰﾀ	1	[HIGH TORQUE]SEE FIG.125
2	01110-10025		BOLT	ﾎﾞﾙﾄ	4	
3	02010-00010		WASHER	ﾜｯｼｬ	4	
4	62159-12702		VALVE,COUNT.,BALANCE	ﾊﾞﾙﾌﾞ	1	
5	01100-08045		BOLT	ﾎﾞﾙﾄ	4	
6	62159-12501		DECAL	ﾃﾞｶﾙ	1	
7	62159-12511		DECAL	ﾃﾞｶﾙ	4	
A2	63169-10101		SUB-ASSY,DEVICE,ROT.		1	INC.8-27
			ﾛｰﾃｰﾃｨﾝｸﾞﾃﾞﾊﾞｲｽｻﾌﾞｱｯｾﾝ			
8	62159-10201		REDUCTION	ﾘﾀﾞｸｼｮﾝ	1	SEE FIG.117
9	63169-12001		PLATE,ROTATING	ﾌﾟﾚｰﾄ	1	
A3	62159-12071		BRG-ASSY,ROTATING		1	INC.10-18
			ﾛｰﾃｰﾃｨﾝｸﾞﾍﾞｱﾘﾝｸﾞｱｯｾﾝ			
10	NO PART NO.		WHEEL,INNER	ﾎｲｰﾙ	1	
11	NO PART NO.		WHEEL,OUTER	ﾎｲｰﾙ	1	
12	03190-00026		BALL	ﾎﾞｰﾙ	77	
13	NO PART NO.	+	SPACER	ｽﾍﾟｰｻ	77	
14	NO PART NO.		CAP	ｷｬｯﾌﾟ	1	
15	NO PART NO.		PIN	ﾋﾟﾝ	1	
16	62159-12261		SEAL	ｼｰﾙ	1	
17	62159-12271		SEAL	ｼｰﾙ	1	
18	04901-00100		FITTING	ﾌｨｯﾃｨﾝｸﾞ	1	
19	01170-14045		BOLT	ﾎﾞﾙﾄ	16	
20	62159-12132		PLATE,BASE	ﾌﾟﾚｰﾄ	1	
21	01103-14045		BOLT	ﾎﾞﾙﾄ	14	
22	02011-00014		WASHER	ﾜｯｼｬ	14	
23	01103-12035		BOLT	ﾎﾞﾙﾄ	6	
24	02011-00012		WASHER	ﾜｯｼｬ	6	
25	62159-12231		FELT	ﾌｪﾙﾄ	1	
26	01170-14030		BOLT	ﾎﾞﾙﾄ	2	
27	25073-00031		PLUG	ﾌﾟﾗｸﾞ	1	
28	63059-12001		GUIDE	ｶﾞｲﾄﾞ	2	
29	62059-12051		SPACER	ｽﾍﾟｰｻ	2	
30	01103-16070		BOLT	ﾎﾞﾙﾄ	4	
31	01103-16085		BOLT	ﾎﾞﾙﾄ	4	
32	02011-00016		WASHER	ﾜｯｼｬ	8	
33	63549-12041		GUIDE	ｶﾞｲﾄﾞ	2	
-	63039-12682		GUIDE	ｶﾞｲﾄﾞ	2	[QUICK REMOVABLEHOOK]
34	62059-12151		SPACER	ｽﾍﾟｰｻ	2	
-	63059-12601		GUIDE	ｶﾞｲﾄﾞ	2	[QUICK REMOVABLEHOOK]
35	62059-12161		SPACER	ｽﾍﾟｰｻ	2	
36	01103-16070		BOLT	ﾎﾞﾙﾄ	8	
-	01103-16070		BOLT	ﾎﾞﾙﾄ	4	[QUICK REMOVABLEHOOK]
37	01103-16080		BOLT	ﾎﾞﾙﾄ	4	
38	02011-00016		WASHER	ﾜｯｼｬ	12	

FIG.116 ROTATING DEVICE [RD306]

(A402RDG0) ﾛｰﾃｰﾃｨﾝｸﾞﾃﾞﾊﾞｲｽ

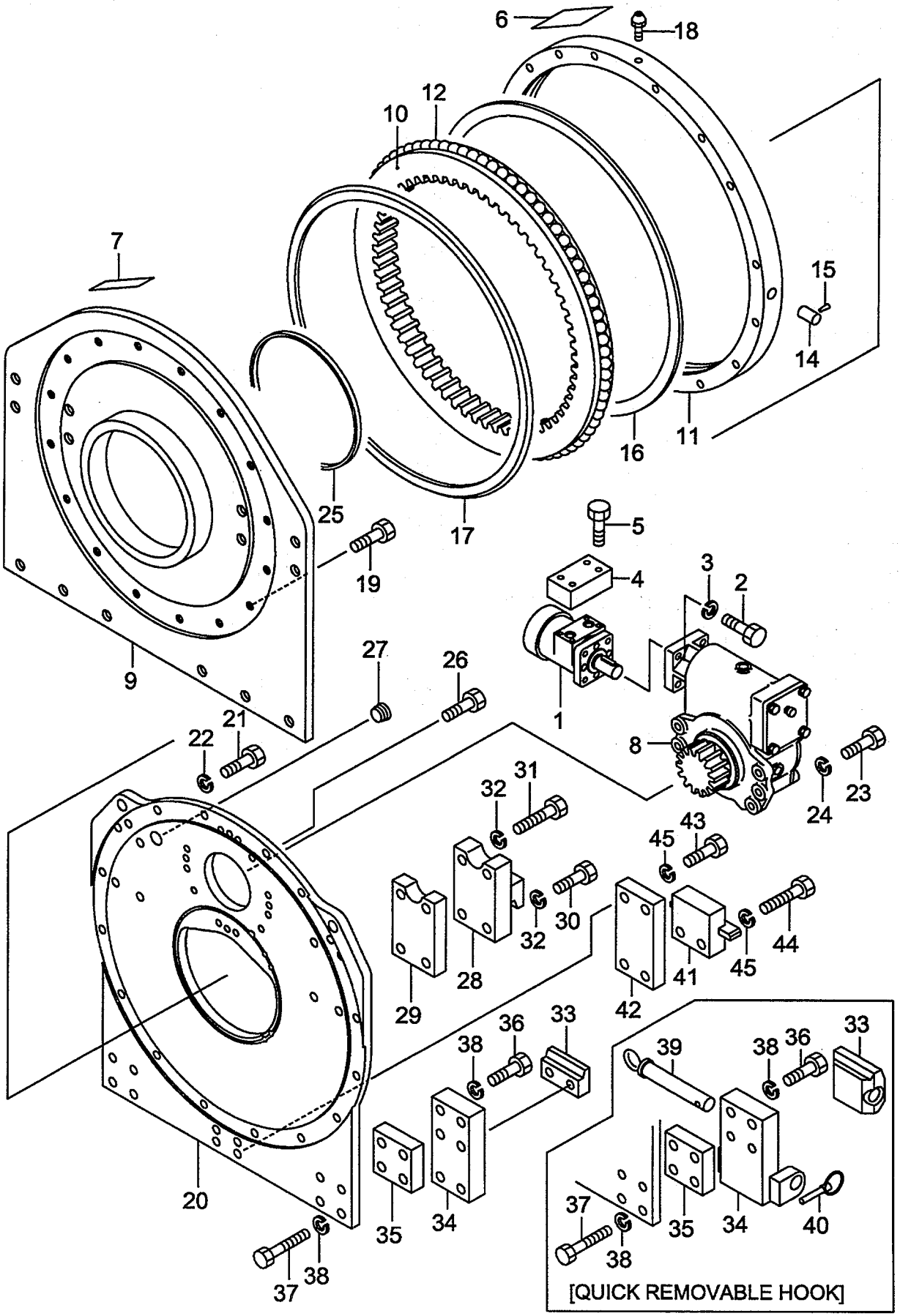

A:RD306

Item No	Part No.	Mark	Description		Req'd	Remarks : Serial No.
-	02011-00016		WASHER	ﾜｯｼｬ	8	[QUICK REMOVABLEHOOK]
39	62039-12691		PIN	ﾋﾟﾝ	2	[QUICK REMOVABLEHOOK]
40	62039-12751		PIN	ﾋﾟﾝ	2	[QUICK REMOVABLEHOOK]
41	62059-12201		BLOCK	ﾌﾞﾛｯｸ	1	
42	63059-12201		SPACER	ｽﾍﾟｰｻ	1	
43	01100-16045		BOLT	ﾎﾞﾙﾄ	2	
44	01100-16055		BOLT	ﾎﾞﾙﾄ	2	
45	02010-00016		WASHER	ﾜｯｼｬ	4	

FIG.117 REDUCTION [RD306]

(A402RDH0) ﾘﾀﾞｸｼｮﾝ

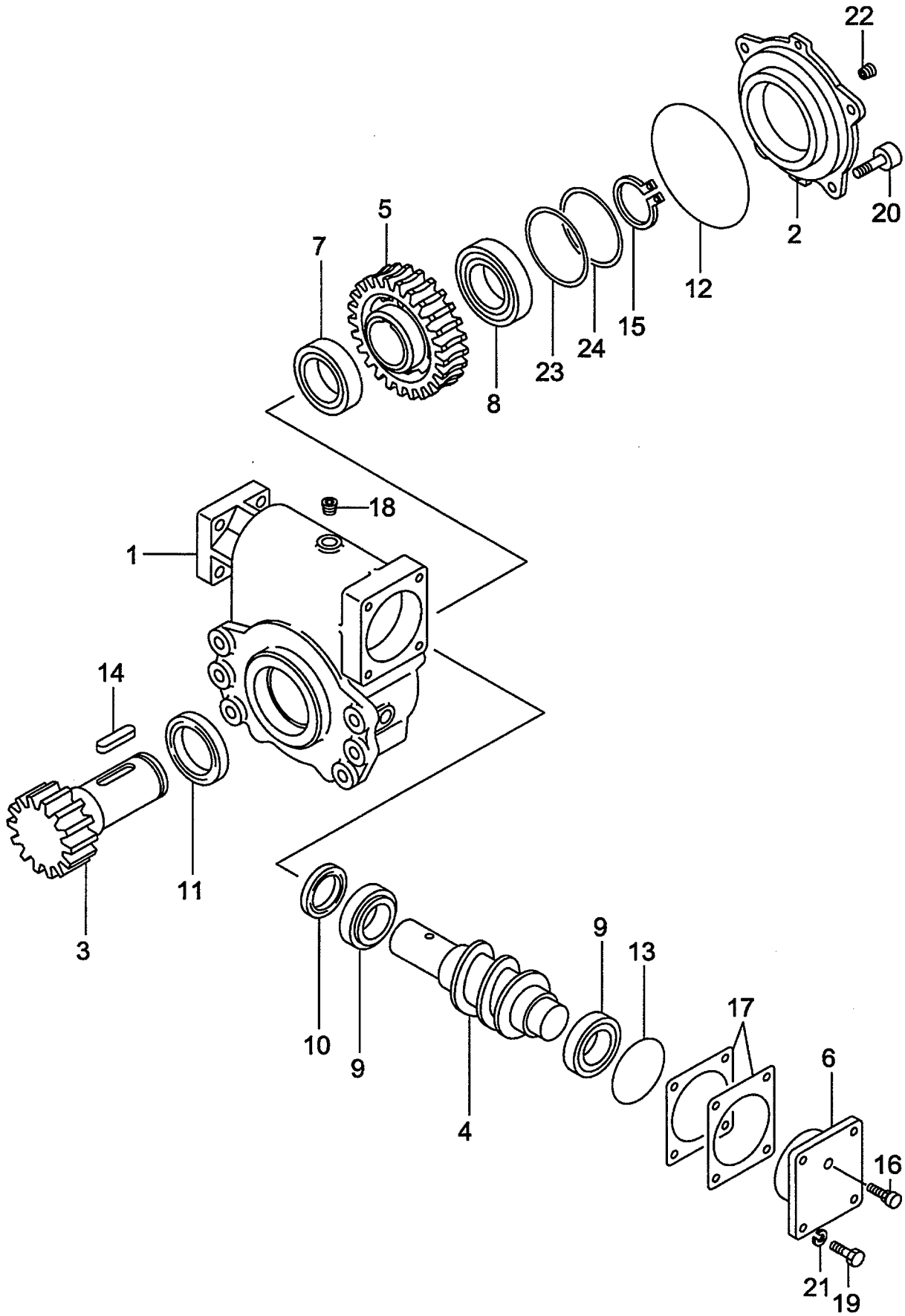

A:RD306

Item No	Part No.	Mark	Description		Req'd	Remarks : Serial No.
A1	62159-10201		REDUCTION-ASSY	ﾘﾀﾞｸｼｮﾝｱｯｾﾝ	1	INC.1-25
1	62159-12082		CASE	ｹｰｽ	1	
2	62159-12111		COVER	ｶﾊﾞｰ	1	
3	62159-12061		SHAFT	ｼｬﾌﾄ	1	
4	62159-12021		WORM	ﾜｰﾑ	1	
5	62159-12031		WHEEL,WORM	ﾎｲｰﾙ	1	
6	62159-12101		CAP	ｷｬｯﾌﾟ	1	
7	03006-00210		BRG	ﾍﾞｱﾘﾝｸﾞ	1	
8	03000-06210		BRG	ﾍﾞｱﾘﾝｸﾞ	1	
9	03071-32008		BRG	ﾍﾞｱﾘﾝｸﾞ	2	
10	62159-12221		SEAL,OIL	ｼｰﾙ	1	
11	62159-12231		SEAL,OIL	ｼｰﾙ	1	
12	03310-01400		O-RING	Oﾘﾝｸﾞ	1	
13	03310-00750		O-RING	Oﾘﾝｸﾞ	1	
14	62159-12211		KEY	ｷｰ	2	
15	02100-00050		RING,SNAP	ｽﾅｯﾌﾟﾘﾝｸﾞ	1	
16	90106-65690		BREATHER,AIR	ﾌﾞﾘｰｻﾞ	1	
17	62159-12201		SHIM	ｼﾑ	AR	
18	24329-45541		PLUG	ﾌﾟﾗｸﾞ	4	
19	01106-10025		BOLT	ﾎﾞﾙﾄ	4	
20	62159-12241		BOLT	ﾎﾞﾙﾄ	4	
21	02011-00010		WASHER	ﾜｯｼｬ	4	
22	22518-40151		PLUG	ﾌﾟﾗｸﾞ	1	
23	62159-12551		SHIM	ｼﾑ	AR	
24	62159-12561		SHIM	ｼﾑ	AR	
25	23870-52871	+	PLUG	ﾌﾟﾗｸﾞ	1	

FIG.118 HYDRAULIC LINE (CONNECTOR-MOTOR)

(A402RDJ0) ﾊｲﾄﾞﾛﾘｯｸﾗｲﾝ (ｺﾈｸﾀｰﾓｰﾀ)

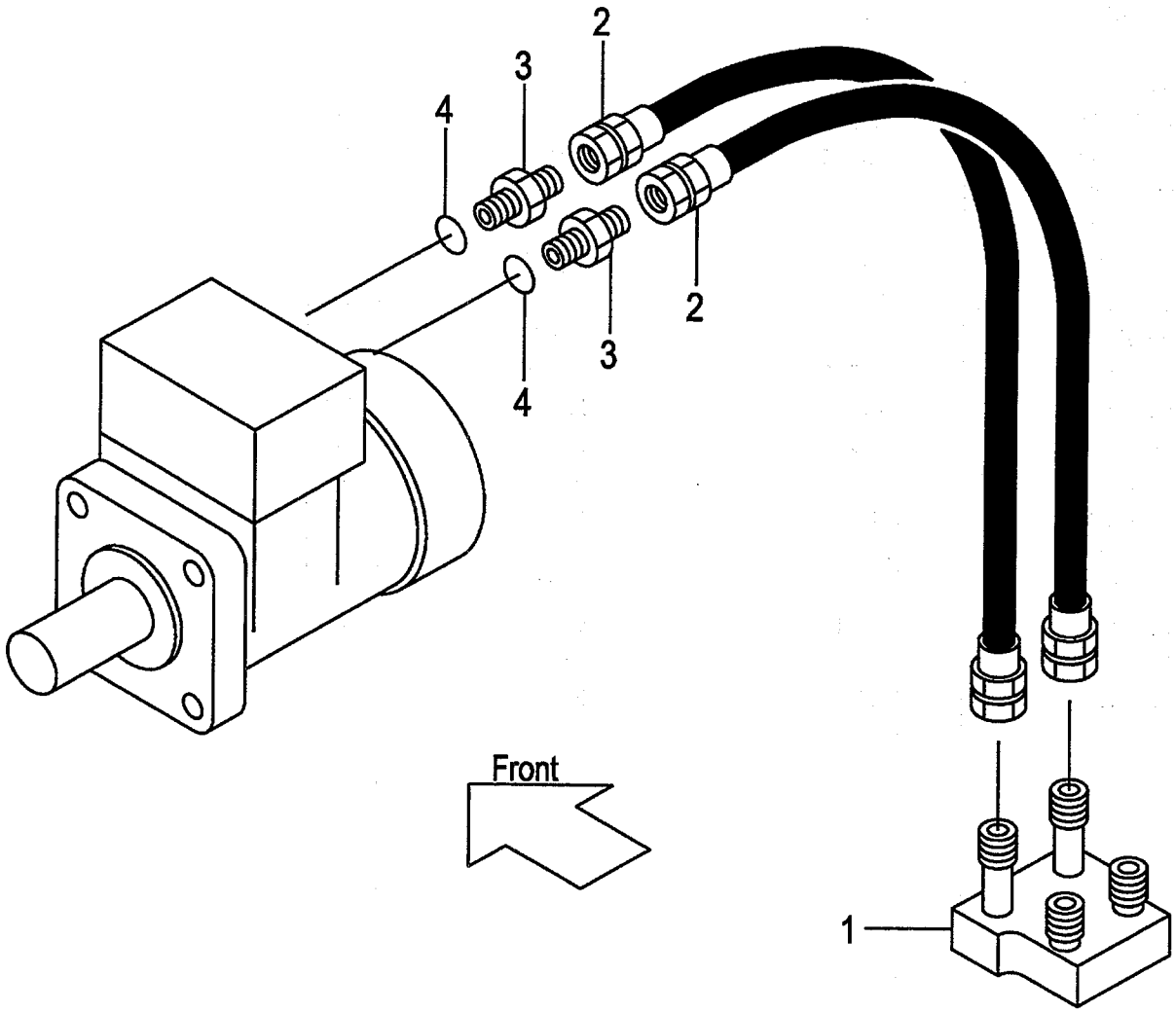

CONTROL VALVE -CONNECTOR	
AP031F	AP231F
AP131F	

FIG.118
(A402RDJ0)

A:RD306(VM)

Item No	Part No.	Mark	Description		Req'd	Remarks : Serial No.
1	63110-14661		STUD	ｽﾀｯﾄﾞ	1	
2	63130-21075		HOSE	ﾎｰｽ	2	
3	04134-00303		NIPPLE	ﾆｯﾌﾟﾙ	2	
4	03320-00140		O-RING	Oﾘﾝｸﾞ	2	
5	63110-18661	+	STUD	ｽﾀｯﾄﾞ	2	
6	62059-12501	+	GUIDE	ｶﾞｲﾄﾞ	2	

FIG.119 HYDRAULIC LINE (CONNECTOR-MOTOR)[VM/4DK]

(A402RDK0) ﾊｲﾄﾞﾛﾘｯｸﾗｲﾝ (ｺﾈｸﾀｰﾓｰﾀ)

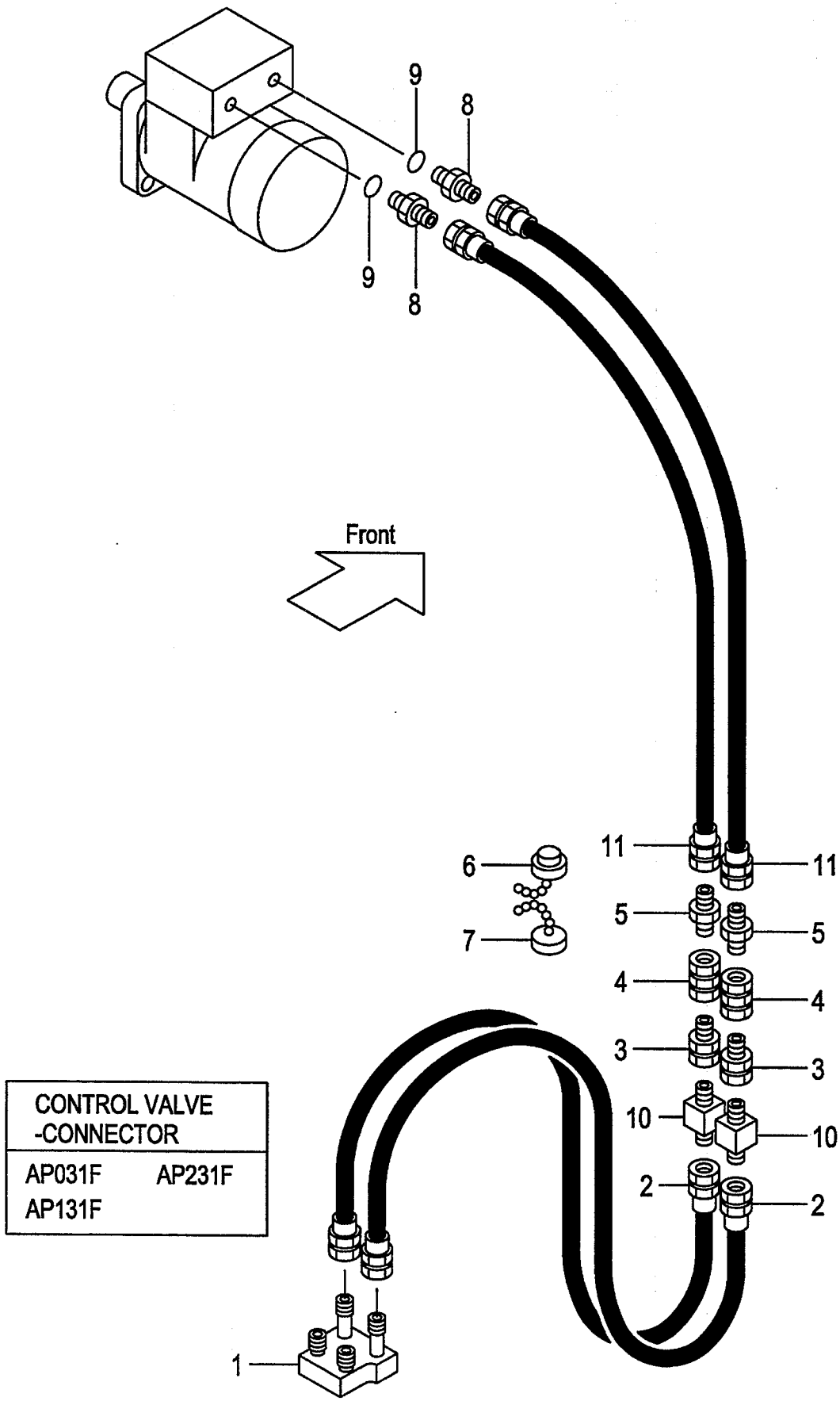

A:RD306(VM)

Item No	Part No.	Mark	Description		Req'd	Remarks : Serial No.
1	63110-14661		STUD	ｽﾀｯﾄﾞ	1	[4DK]
2	63130-21035		HOSE	ﾎｰｽ	2	[4DK]
3	04138-00303		UNION	ﾕﾆｵﾝ	2	[4DK]
4	50226-29111		COUPLING	ｶｯﾌﾟﾘﾝｸﾞ	2	[4DK]
5	04137-00303		NIPPLE	ﾆｯﾌﾟﾙ	2	[4DK]
6	63130-14061		PLUG	ﾌﾟﾗｸﾞ	2	[4DK]
7	63130-14071		CAP	ｷｬｯﾌﾟ	2	[4DK]
8	04134-00303		NIPPLE	ﾆｯﾌﾟﾙ	2	[4DK]
9	03320-00140		O-RING	Oﾘﾝｸﾞ	2	[4DK]
10	63110-18661		STUD	ｽﾀｯﾄﾞ	2	[4DK]
11	62233-45001		HOSE	ﾎｰｽ	2	[4DK]

FIG.120 HYDRAULIC LINE (CONNECTOR-MOTOR)[VFM,VFHM]

(A402RDL0) ﾊｲﾄﾞﾛﾘｯｸﾗｲﾝ (ｺﾈｸﾀｰﾓｰﾀ)

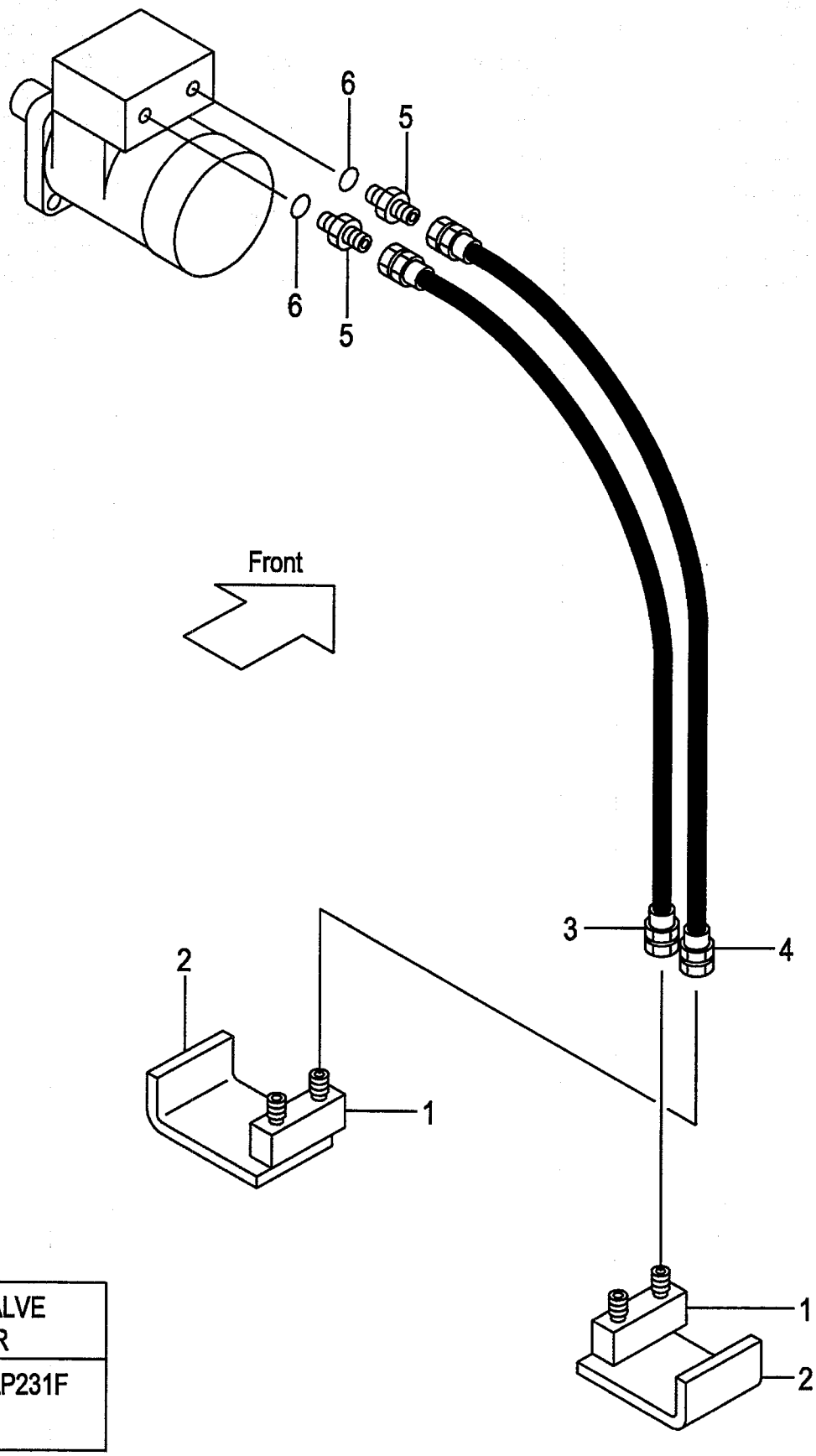

CONTROL VALVE -CONNECTOR	
AP031F	AP231F
AP131F	

FIG.120
(A402RDL0)

A:RD306(VFM) RD306(VFHM)

Item No	Part No.	Mark	Description		Req'd	Remarks : Serial No.
1	62150-12841		STUD	ｽﾀｯﾄﾞ	2	
2	62150-12001		ANGLE	ｱﾝｸﾞﾙ	2	[VFM]
3	63130-21075		HOSE	ﾎｰｽ	1	
4	63130-21100		HOSE	ﾎｰｽ	1	
5	04134-00303		NIPPLE	ﾆｯﾌﾟﾙ	2	
6	03320-00140		O-RING	Oﾘﾝｸﾞ	2	
7	62150-12861	+	PLATE	ﾌﾟﾚｰﾄ	2	[VFHM]
8	62150-12771	+	BRACKET	ﾌﾞﾗｹｯﾄ	2	[VFHM]
9	62059-12501	+	GUIDE	ｶﾞｲﾄﾞ	2	

FIG.121 HYDRAULIC LINE (CONNECTOR-MOTOR)[VFM/4DK,VFHM/4DK]

(A402RDM0) ﾊｲﾄﾞﾛﾘｯｸﾗｲﾝ (ｺﾈｸﾀｰﾓｰﾀ)

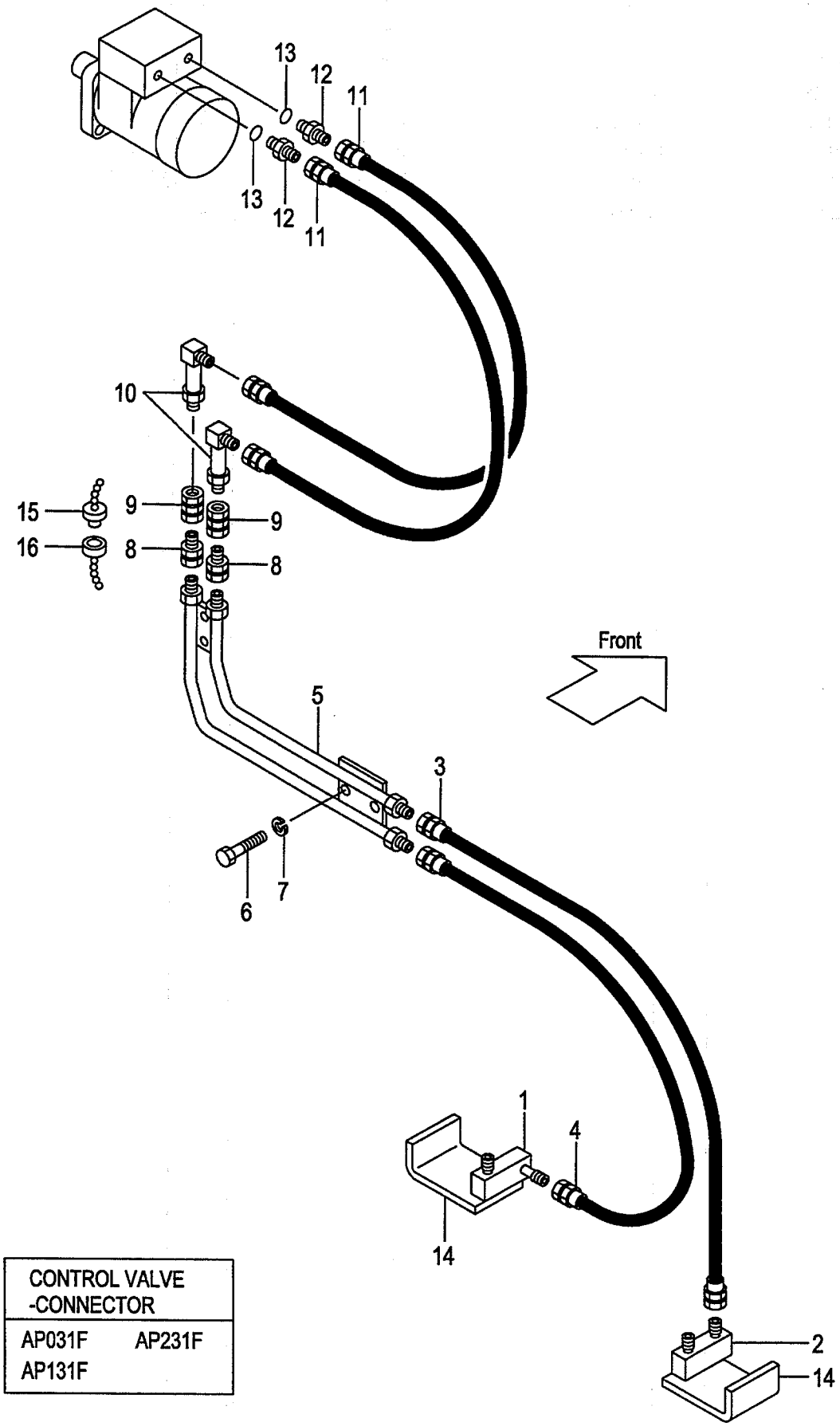

CONTROL VALVE -CONNECTOR	
AP031F	AP231F
AP131F	

FIG.121
(A402RDM0)

A:RD306(VFM) RD306(VFHM)

Item No	Part No.	Mark	Description		Req'd	Remarks : Serial No.
1	63110-14751		STUD	ｽﾀｯﾄﾞ	1	[4DK]
2	62150-12841		STUD	ｽﾀｯﾄﾞ	1	[4DK]
3	63130-21045		HOSE	ﾎｰｽ	1	[VFM/4DK]
-	63130-21040		HOSE	ﾎｰｽ	1	[VFHM/4DK]
4	63130-21055		HOSE	ﾎｰｽ	1	[VFM/4DK]
-	63130-21050		HOSE	ﾎｰｽ	1	[VFHM/4DK]
5	62150-12701		PIPE	ﾊﾟｲﾌﾟ	1	[4DK]
6	01100-08016		BOLT	ﾎﾞﾙﾄ	4	[4DK]
7	02010-00008		WASHER	ﾜｯｼｬ	4	[4DK]
8	04138-00303		UNION	ﾕﾆｵﾝ	2	[4DK]
9	50226-29111		COUPLING	ｶｯﾌﾟﾘﾝｸﾞ	2	[4DK]
10	53110-12131		ELBOW	ｴﾙﾎﾞ	2	[4DK]
11	63130-21140		HOSE	ﾎｰｽ	2	[4DK]
12	04134-00303		NIPPLE	ﾆｯﾌﾟﾙ	2	[4DK]
13	03320-00140		O-RING	Oﾘﾝｸﾞ	2	[4DK]
14	62150-12001		ANGLE	ｱﾝｸﾞﾙ	2	[VFM/4DK]
15	63130-14061		PLUG	ﾌﾟﾗｸﾞ	2	[4DK]
16	63130-14071		CAP	ｷｬｯﾌﾟ	2	[4DK]
17	62150-12771	+	BRACKET	ﾌﾞﾗｹｯﾄ	2	[VFM/4DK]
18	62150-12861	+	PLATE	ﾌﾟﾚｰﾄ	1	[VFHM/4DK]
19	62059-12501	+	GUIDE	ｶﾞｲﾄﾞ	2	[4DK]

FIG.122 HYDRAULIC LINE (CONNECTOR-MOTOR)[VFM/A4R,VFHM/A4R]

(A402RDN0) ﾊｲﾄﾞﾛﾘｯｸﾗｲﾝ (ｺﾈｸﾀｰﾓｰﾀ)

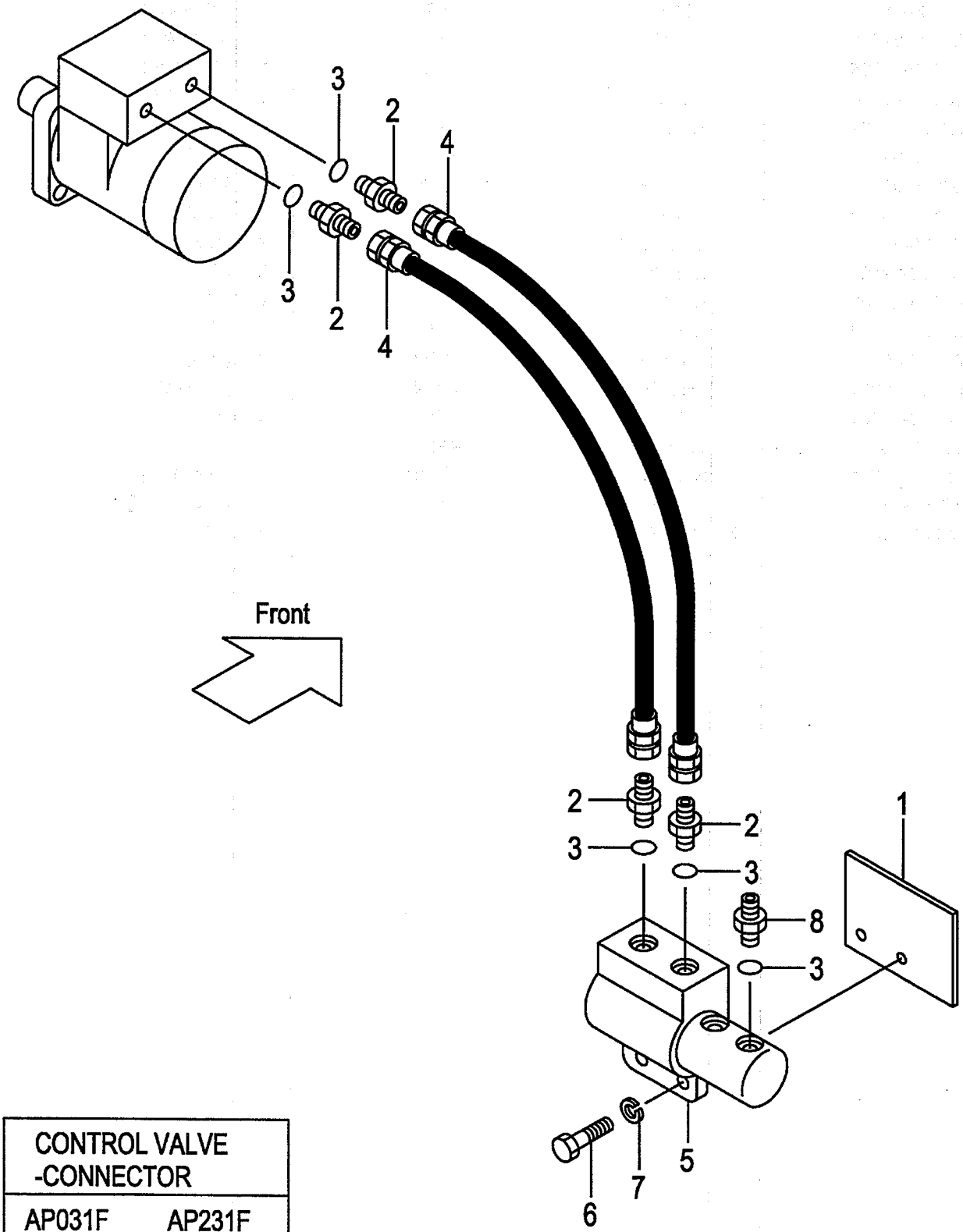

CONTROL VALVE -CONNECTOR	
AP031F	AP231F
AP131F	

A:RD306(VFM) RD306(VFHM)

Item No	Part No.	Mark	Description		Req'd	Remarks : Serial No.
1	62150-12791		BRACKET	ﾌﾞﾗｹｯﾄ	1	[A4R]
2	04134-00303		NIPPLE	ﾆｯﾌﾟﾙ	4	[A4R]
3	03320-00140		O-RING	Oﾘﾝｸﾞ	6	[A4R]
4	63130-21045		HOSE	ﾎｰｽ	2	[A4R]
5	63130-15083		BLOCK,JUNCTION	ﾌﾞﾛｯｸ	1	[A4R]SEE FIG.124
6	01100-12020		BOLT	ﾎﾞﾙﾄ	2	[A4R]
7	02010-00020		WASHER	ﾜｯｼｬ	2	[A4R]
8	63110-12281		NIPPLE	ﾆｯﾌﾟﾙ	2	[A4R]

HYDRAULIC LINE (CONNECTOR-MOTOR)

FIG.123 **[VFM/A4R/4DK,VFHM/A4R/4DK]**

(A402RDP0) ﾊｲﾄﾞﾛﾘｯｸﾗｲﾝ (ｺﾈｸﾀｰﾓｰﾀ)

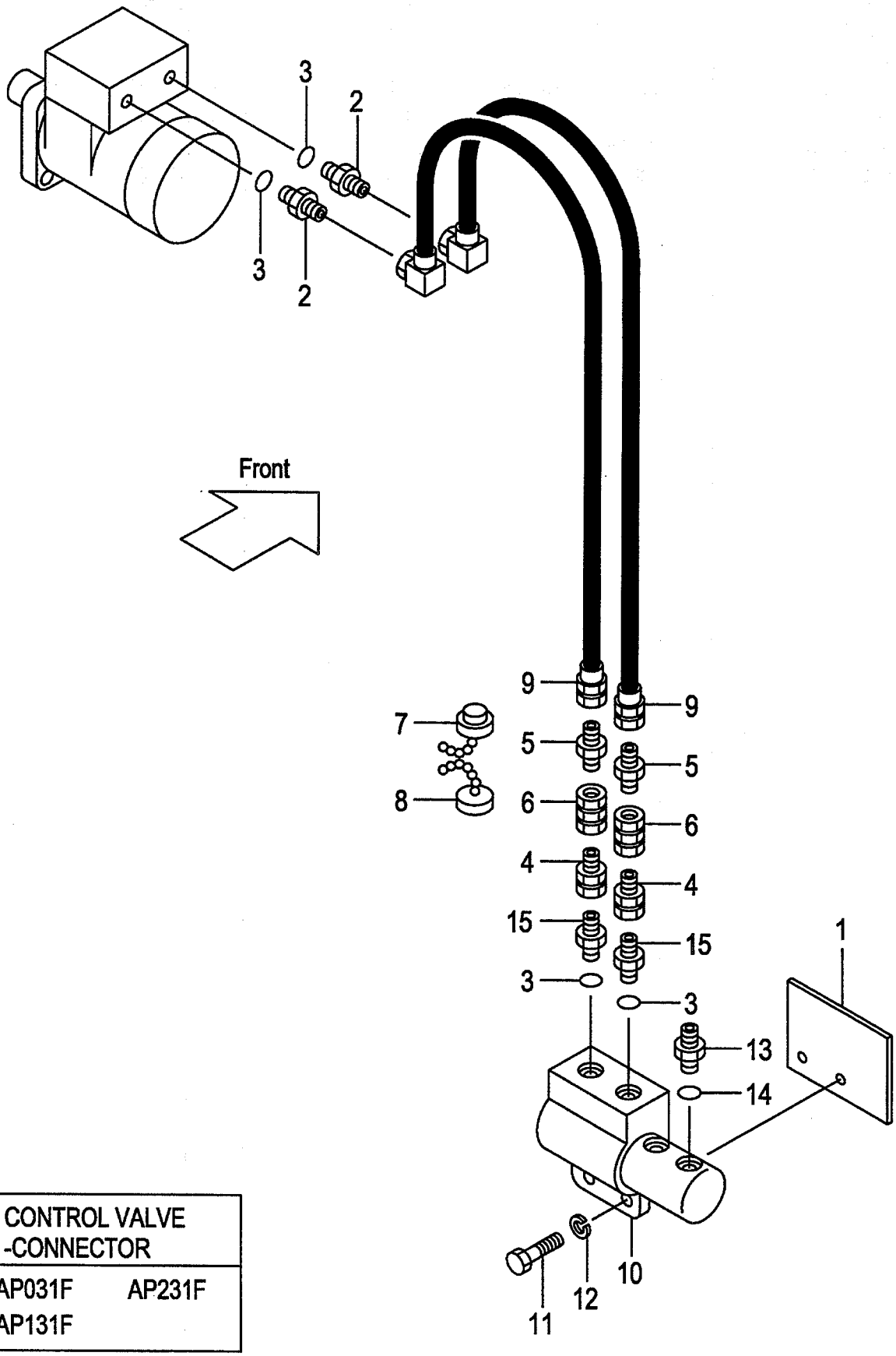

CONTROL VALVE -CONNECTOR	
AP031F	AP231F
AP131F	

A:RD306(VFM) RD306(VFHM)

Item No	Part No.	Mark	Description		Req'd	Remarks : Serial No.
1	62150-12791		BRACKET	ﾌﾞﾗｹｯﾄ	1	[A4R/4DK]
2	04134-00303		NIPPLE	ﾆｯﾌﾟﾙ	2	[A4R/4DK]
3	03320-00140		O-RING	Oﾘﾝｸﾞ	4	[A4R/4DK]
4	04138-00303		UNION	ﾕﾆｵﾝ	2	[A4R/4DK]
5	04137-00303		NIPPLE	ﾆｯﾌﾟﾙ	2	[A4R/4DK]
6	50226-29111		COUPLING	ｶｯﾌﾟﾘﾝｸﾞ	2	[A4R/4DK]
7	63130-14061		PLUG	ﾌﾟﾗｸﾞ	2	[A4R/4DK]
8	63130-14071		CAP	ｷｬｯﾌﾟ	2	[A4R/4DK]
9	63153-82701		HOSE	ﾎｰｽ	2	[A4R/4DK]
10	63130-15083		BLOCK,JUNCTION	ﾌﾞﾛｯｸ	1	[A4R/4DK]SEE FIG.124
11	01100-12035		BOLT	ﾎﾞﾙﾄ	2	[A4R/4DK]
12	02010-00012		WASHER	ﾜｯｼｬ	2	[A4R/4DK]
13	63110-12281		NIPPLE	ﾆｯﾌﾟﾙ	2	[A4R/4DK]
14	03320-00140		O-RING	Oﾘﾝｸﾞ	2	[A4R/4DK]
15	53110-12041		NIPPLE	ﾆｯﾌﾟﾙ	2	[A4R/4DK]

FIG.124 JUNCTION BLOCK [RD306]

(A402RDQ0) ｼﾞｬﾝｸｼｮﾝﾌﾞﾛｯｸ

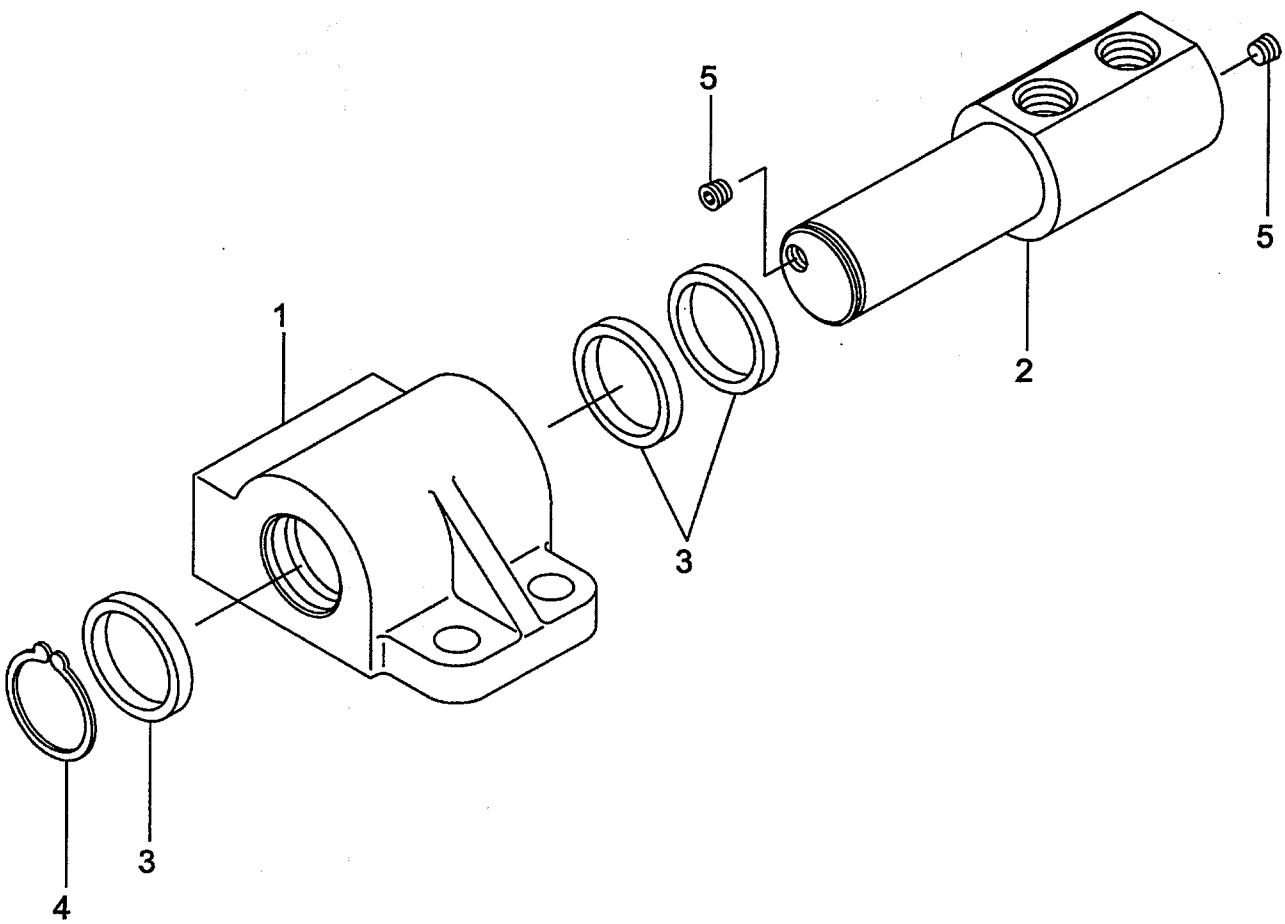

FIG.124
(A402RDQ0)

A:RD306(VFM) RD306(VFHM)

Item No	Part No.	Mark	Description		Req'd	Remarks : Serial No.
A1	63130-15083		BLOCK-ASSY,JUNCTION	ｼﾞｬﾝｸｼｮﾝﾌﾞﾛｯｸｱｯｾﾝ	1	INC.1-5
1	63110-11521		HOUSING	ﾊｳｼﾞﾝｸﾞ	1	
2	63110-11531		SHAFT	ｼｬﾌﾄ	1	
3	63110-16301		SEAL	ｼｰﾙ	3	
4	02100-00030		RING,SNAP	ｽﾅｯﾌﾟﾘﾝｸﾞ	1	
5	63110-14511		PLUG	ﾌﾟﾗｸﾞ	2	

FIG.125 MOTOR [RD306]

(A402RDX0) モータ

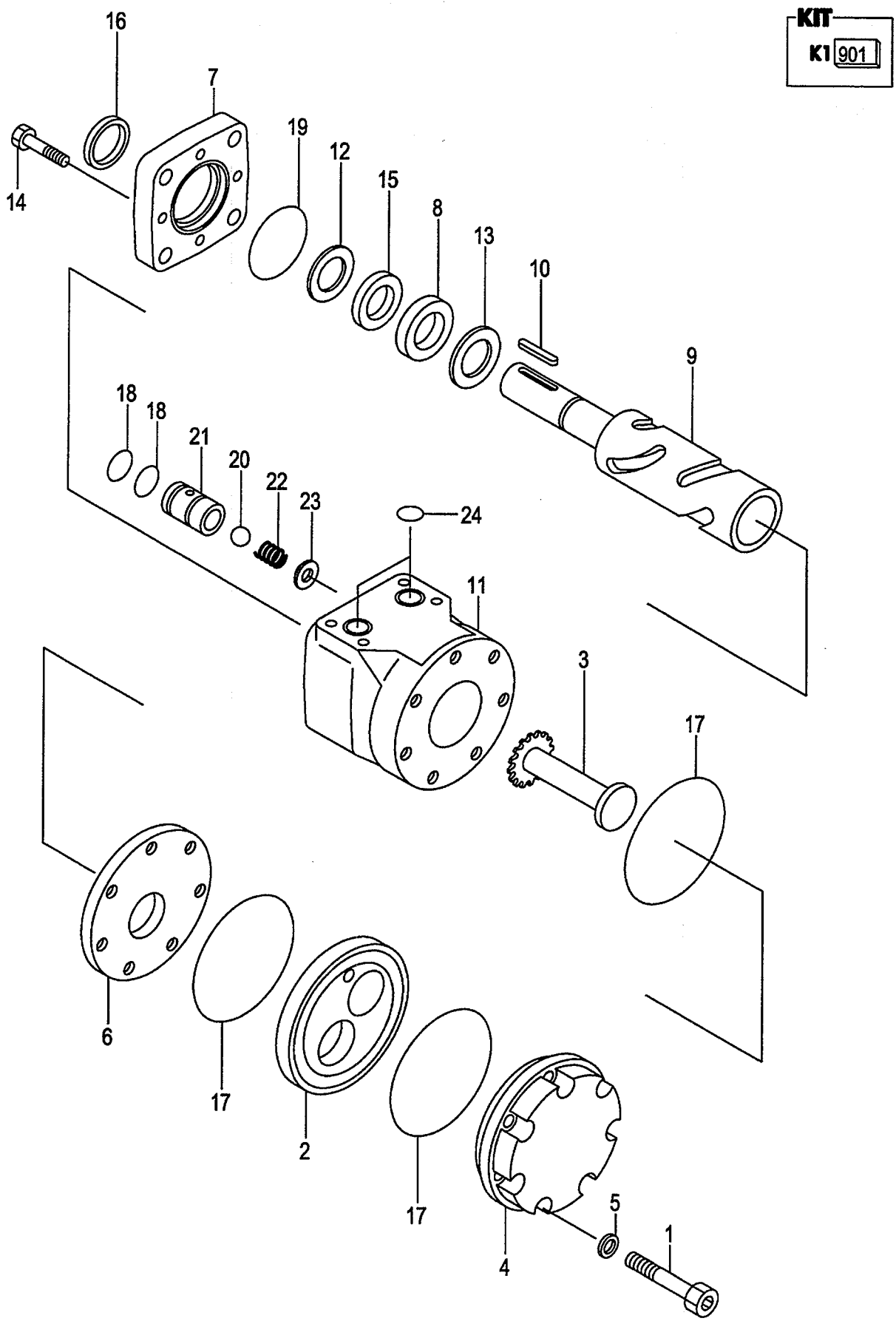

A:RD306

Item No	Part No.	Mark	Description		Req'd	Remarks : Serial No.
A1	62059-12801		MOTOR-ASSY	ﾓｰﾀｱｯｾﾝ	1	INC.1-24
-	63059-12801		MOTOR-ASSY	ﾓｰﾀｱｯｾﾝ	1	[HIGH TORQUE] INC.1-24
901	01170-14030	K1	KIT,SEAL	ｼｰﾙｷｯﾄ	1	INC.5,15-19,24
1	NO PART NO.	#	SCREW	ｽｸﾘｭ	7	
2	NO PART NO.	#	GYRATOR	ｼﾞｬｲﾚｰﾀ	1	
-	NO PART NO.	#	GYRATOR	ｼﾞｬｲﾚｰﾀ	1	[HIGH TORQUE]
3	NO PART NO.	#	DRIVE	ﾄﾞﾗｲﾌﾞ	1	
4	NO PART NO.	#	CAP	ｷｬｯﾌﾟ	1	
5	NO PART NO.	#*	WASHER	ﾜｯｼｬ	7	
6	62159-13251		SPACER	ｽﾍﾟｰｻ	1	
7	62159-13041		FLANGE	ﾌﾗﾝｼﾞ	1	
8	62159-13051		RACE	ﾚｰｽ	1	
9	62159-13061		SHAFT,OUTPUT	ｼｬﾌﾄ	1	
10	62159-13101		KEY	ｷｰ	1	
11	62159-13261		HOUSING	ﾊｳｼﾞﾝｸﾞ	1	
12	NO PART NO.	#	RING	ﾘﾝｸﾞ	1	
13	62159-13081		BEARING	ﾍﾞｱﾘﾝｸﾞ	1	
14	62159-13091		SCREW	ｽｸﾘｭ	4	
15	NO PART NO.	#*	SEAL,OIL	ｼｰﾙ	1	
16	NO PART NO.	#*	SEAL,DUST	ｼｰﾙ	1	
17	NO PART NO.	#*	O-RING	Oﾘﾝｸﾞ	3	
18	NO PART NO.	#*	O-RING	Oﾘﾝｸﾞ	4	
19	NO PART NO.	#*	O-RING	Oﾘﾝｸﾞ	1	
A2	62159-13161		VALVE-ASSY,CHECK	ﾁｪｯｸﾊﾞﾙﾌﾞｱｯｾﾝ	2	INC.20-23
20	NO PART NO.	#	BALL	ﾎﾞｰﾙ	2	
21	NO PART NO.	#	BODY	ﾎﾞﾃﾞｨ	2	
22	NO PART NO.	#	SPRING	ｽﾌﾟﾘﾝｸﾞ	2	
23	NO PART NO.	#	WASHER	ﾜｯｼｬ	2	
24	NO PART NO.	#*	O-RING	Oﾘﾝｸﾞ	2	

FIG.126 ROTATING DEVICE [RD31C]

(A503RD10) ローテーティング デバイス

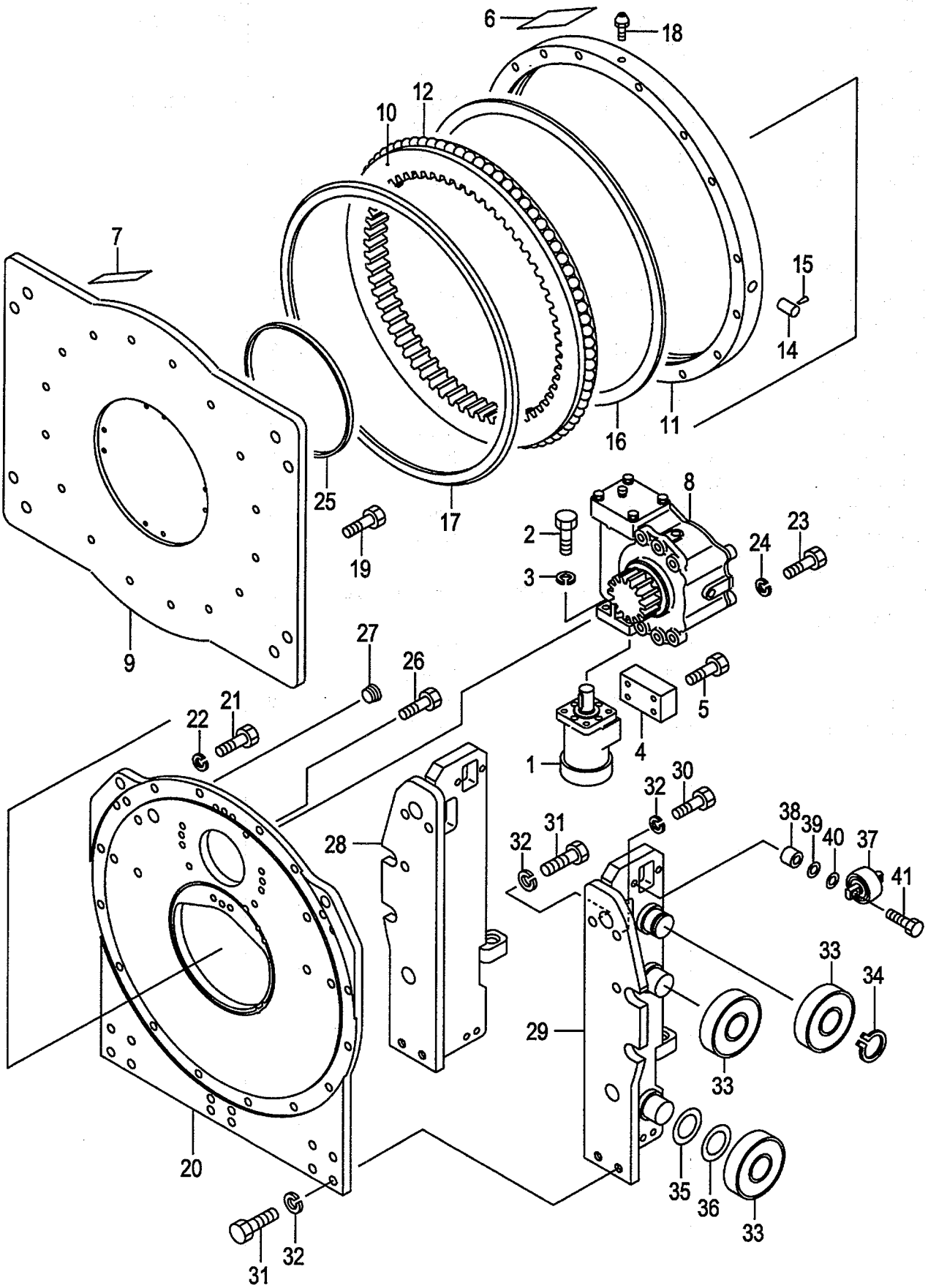

A:RD31C(VM/J)

Item No	Part No.	Mark	Description		Req'd	Remarks : Serial No.
A1	631C9-10002		DEVICE-ASSY,ROTATING		1	INC.1-41
			ﾛｰﾃｰﾃｨﾝｸﾞﾃﾞﾊﾞｲｽｱｯｾﾝ			
-	631C9-10012		DEVICE-ASSY,ROTATING		1	[HIGH TORQUE] INC.1-41
			ﾛｰﾃｰﾃｨﾝｸﾞﾃﾞﾊﾞｲｽｱｯｾﾝ			
1	62059-12801		MOTOR	ﾓｰﾀ	1	SEE FIG.129
-	63059-12801		MOTOR	ﾓｰﾀ	1	[HIGH TORQUE]SEE FIG.129
2	01110-10025		BOLT	ﾎﾞﾙﾄ	4	
3	02010-00010		WASHER	ﾜｯｼｬ	4	
4	62159-12702		VALVE,COUNT.,BALANCE	ﾊﾞﾙﾌﾞ	1	
5	01100-08045		BOLT	ﾎﾞﾙﾄ	4	
6	62159-12501		DECAL	ﾃﾞｶﾙ	1	
7	62159-12511		DECAL	ﾃﾞｶﾙ	4	
A2	63169-10101		SUB-ASSY,DEVICE,ROT.		1	INC.8-27
			ﾛｰﾃｰﾃｨﾝｸﾞﾃﾞﾊﾞｲｽｻﾌﾞｱｯｾﾝ			
8	62159-10201		REDUCTION	ﾘﾀﾞｸｼｮﾝ	1	SEE FIG.127
9	63169-12001		PLATE,ROTATING	ﾌﾟﾚｰﾄ	1	
A3	62159-12071		BRG-ASSY,ROTATING		1	INC.10-18
			ﾛｰﾃｰﾃｨﾝｸﾞﾍﾞｱﾘﾝｸﾞｱｯｾﾝ			
10	NO PART NO.		WHEEL,INNER	ﾎｲｰﾙ	1	
11	NO PART NO.		WHEEL,OUTER	ﾎｲｰﾙ	1	
12	03190-00026		BALL	ﾎﾞｰﾙ	77	
13	NO PART NO.	+	SPACER	ｽﾍﾟｰｻ	77	
14	NO PART NO.		CAP	ｷｬｯﾌﾟ	1	
15	NO PART NO.		PIN	ﾋﾟﾝ	1	
16	62159-12261		SEAL	ｼｰﾙ	1	
17	62159-12271		SEAL	ｼｰﾙ	1	
18	04901-00100		FITTING	ﾌｨｯﾃｨﾝｸﾞ	1	
19	01170-14045		BOLT	ﾎﾞﾙﾄ	16	
20	62159-12132		PLATE,BASE	ﾌﾟﾚｰﾄ	1	
21	01103-14045		BOLT	ﾎﾞﾙﾄ	14	
22	02011-00014		WASHER	ﾜｯｼｬ	14	
23	01103-12035		BOLT	ﾎﾞﾙﾄ	6	
24	02011-00012		WASHER	ﾜｯｼｬ	6	
25	62159-12231		FELT	ﾌｪﾙﾄ	1	
26	01170-14030		BOLT	ﾎﾞﾙﾄ	2	
27	25073-00031		PLUG	ﾌﾟﾗｸﾞ	1	
28	631B9-10102		BRACKET,LIFT,RH	ﾌﾞﾗｹｯﾄ	1	
29	631B9-10112		BRACKET,LIFT,LH	ﾌﾞﾗｹｯﾄ	1	
30	01103-16030		BOLT	ﾎﾞﾙﾄ	4	
31	01103-16040		BOLT	ﾎﾞﾙﾄ	6	
32	02011-00016		WASHER	ﾜｯｼｬ	10	
33	277P8-22051		ROLLER,END,SMALL	ﾛｰﾗ	6	
-	277P8-22061		ROLLER,END,LARGE	ﾛｰﾗ	(6)	
34	02100-00045		RING,SNAP	ｽﾅｯﾌﾟﾘﾝｸﾞ	2	
35	277P8-22071		SHIM,T-0.5	ｼﾑ	5	
36	277P8-22081		SHIM,T-1.0	ｼﾑ	5	
37	23458-32052		ROLLER,SIDE	ﾛｰﾗ	2	
38	22548-34031		SPACER	ｽﾍﾟｰｻ	4	
39	22548-34051		SHIM	ｼﾑ	5	
40	22548-34061		SHIM	ｼﾑ	5	

FIG.126 ROTATING DEVICE [RD31C]

(A503RD10) ローテーティング デバイス

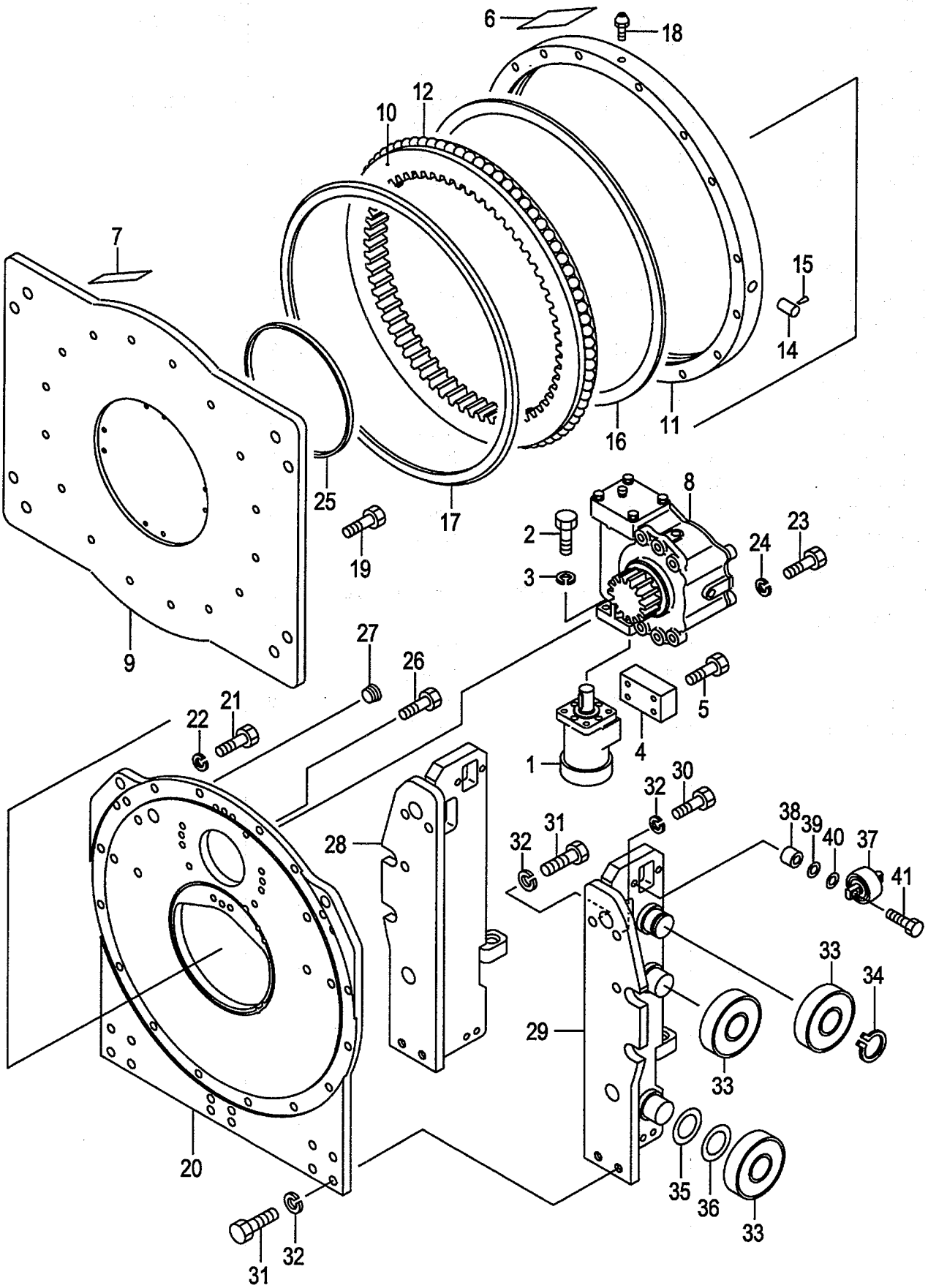

A:RD31C(VM/J)

Item No	Part No.	Mark	Description	Req'd	Remarks : Serial No.
41	01184-12050		BOLT & WASHER ﾎﾞﾙﾄ&ﾜｯｼｬ	4	

FIG.127 REDUCTION [RD31C]

(A503RD20) ﾘﾀﾞｸｼｮﾝ

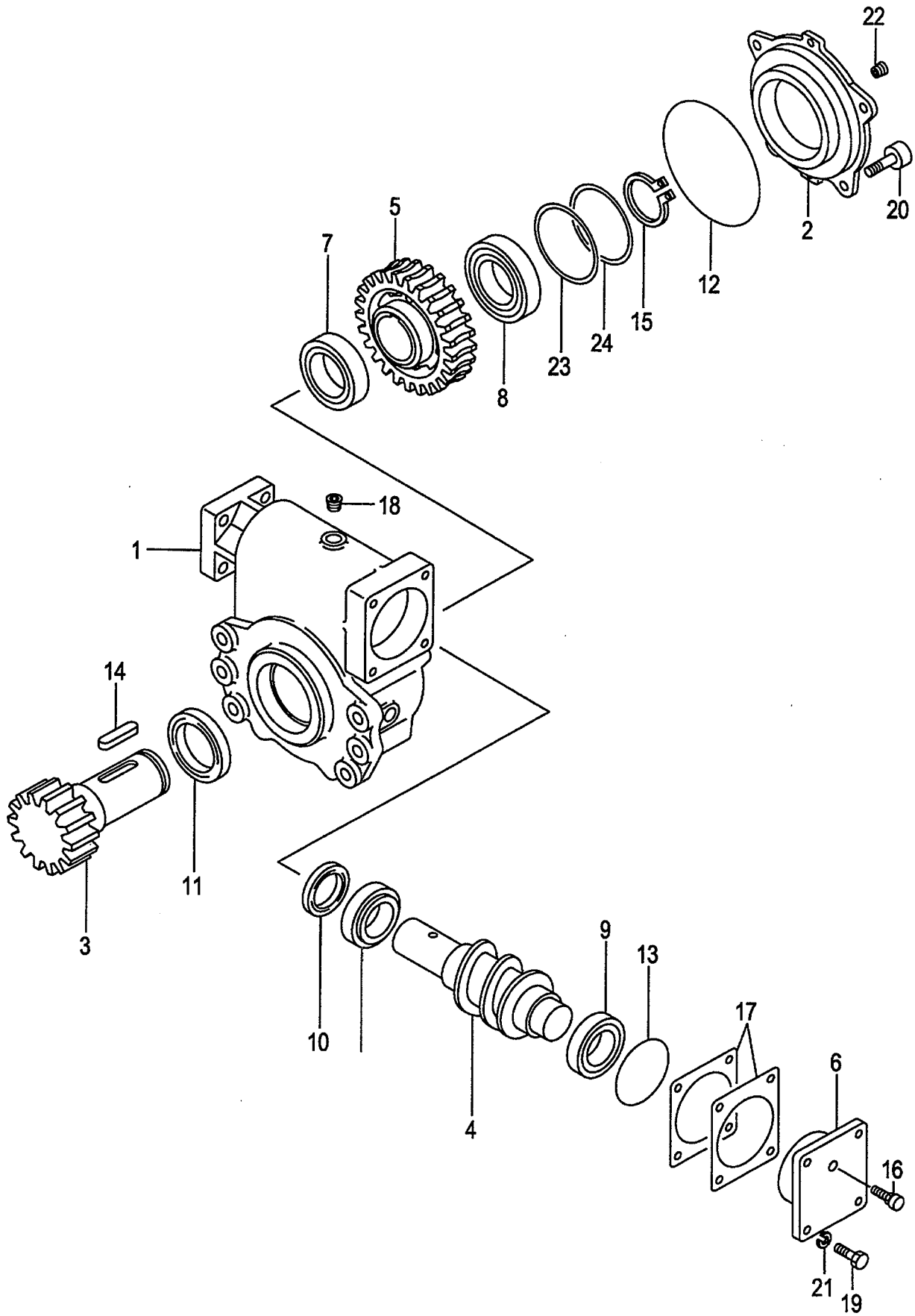

A:RD31C(VM/J)

Item No	Part No.	Mark	Description		Req'd	Remarks : Serial No.
A1	62159-10201		REDUCTION-ASSY	ﾘﾀﾞｸｼｮﾝｱｯｾﾝ	1	INC.1-25
1	62159-12082		CASE	ｹｰｽ	1	
2	62159-12111		COVER	ｶﾊﾞｰ	1	
3	62159-12061		SHAFT	ｼｬﾌﾄ	1	
4	62159-12021		WORM	ﾜｰﾑ	1	
5	62159-12031		WHEEL,WORM	ﾎｲｰﾙ	1	
6	62159-12101		CAP	ｷｬｯﾌﾟ	1	
7	03006-00210		BRG	ﾍﾞｱﾘﾝｸﾞ	1	
8	03000-06210		BRG	ﾍﾞｱﾘﾝｸﾞ	1	
9	03071-32008		BRG	ﾍﾞｱﾘﾝｸﾞ	2	
10	62159-12221		SEAL,OIL	ｼｰﾙ	1	
11	62159-12231		SEAL,OIL	ｼｰﾙ	1	
12	03310-01400		O-RING	Oﾘﾝｸﾞ	1	
13	03310-00750		O-RING	Oﾘﾝｸﾞ	1	
14	62159-12211		KEY	ｷｰ	2	
15	02100-00050		RING,SNAP	ｽﾅｯﾌﾟﾘﾝｸﾞ	1	
16	90106-65690		BREATHER,AIR	ﾌﾞﾘｰｻﾞ	1	
17	62159-12201		SHIM	ｼﾑ	AR	
18	24329-45541		PLUG	ﾌﾟﾗｸﾞ	4	
19	01106-10025		BOLT	ﾎﾞﾙﾄ	4	
20	62159-12241		BOLT	ﾎﾞﾙﾄ	4	
21	02011-00010		WASHER	ﾜｯｼｬ	4	
22	22518-40151		PLUG	ﾌﾟﾗｸﾞ	1	
23	62159-12551		SHIM	ｼﾑ	AR	
24	62159-12561		SHIM	ｼﾑ	AR	
25	23870-52871	+	PLUG	ﾌﾟﾗｸﾞ	1	

FIG.128 HYDRAULIC LINE (CONNECTOR-MOTOR)

(A503RD30) ﾊｲﾄﾞﾛﾘｯｸﾗｲﾝ (ｺﾈｸﾀｰﾓｰﾀ)

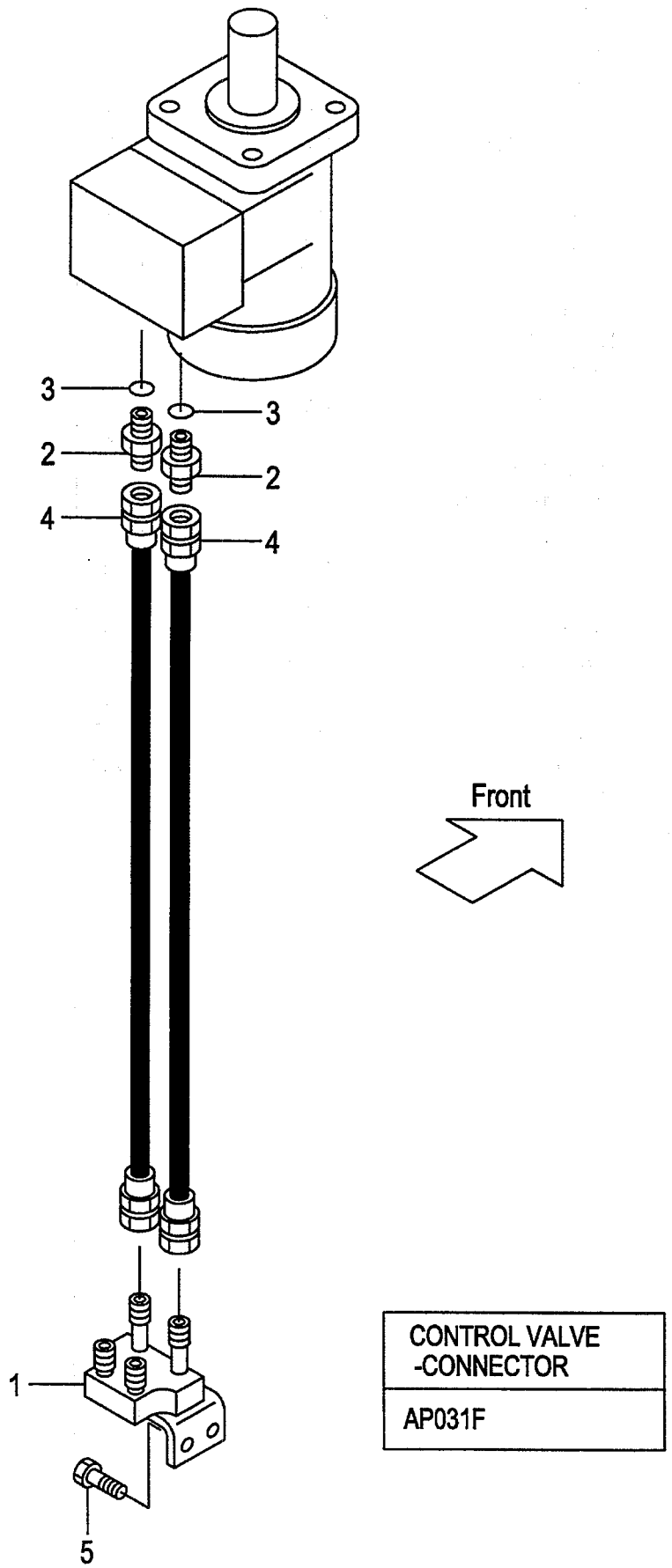

A:RD31C(VM/J)

Item No	Part No.	Mark	Description		Req'd	Remarks : Serial No.
1	621F0-12001		STUD	ｽﾀｯﾄﾞ	1	
2	04134-00303		NIPPLE	ﾆｯﾌﾟﾙ	2	
3	03320-00140		O-RING	Oﾘﾝｸﾞ	2	
4	63130-21060		HOSE	ﾎｰｽ	2	
5	01184-10025		BOLT & WASHER	ﾎﾞﾙﾄ&ﾜｯｼｬ	2	

FIG.129 MOTOR [RD31C]

(A503RD40) モータ

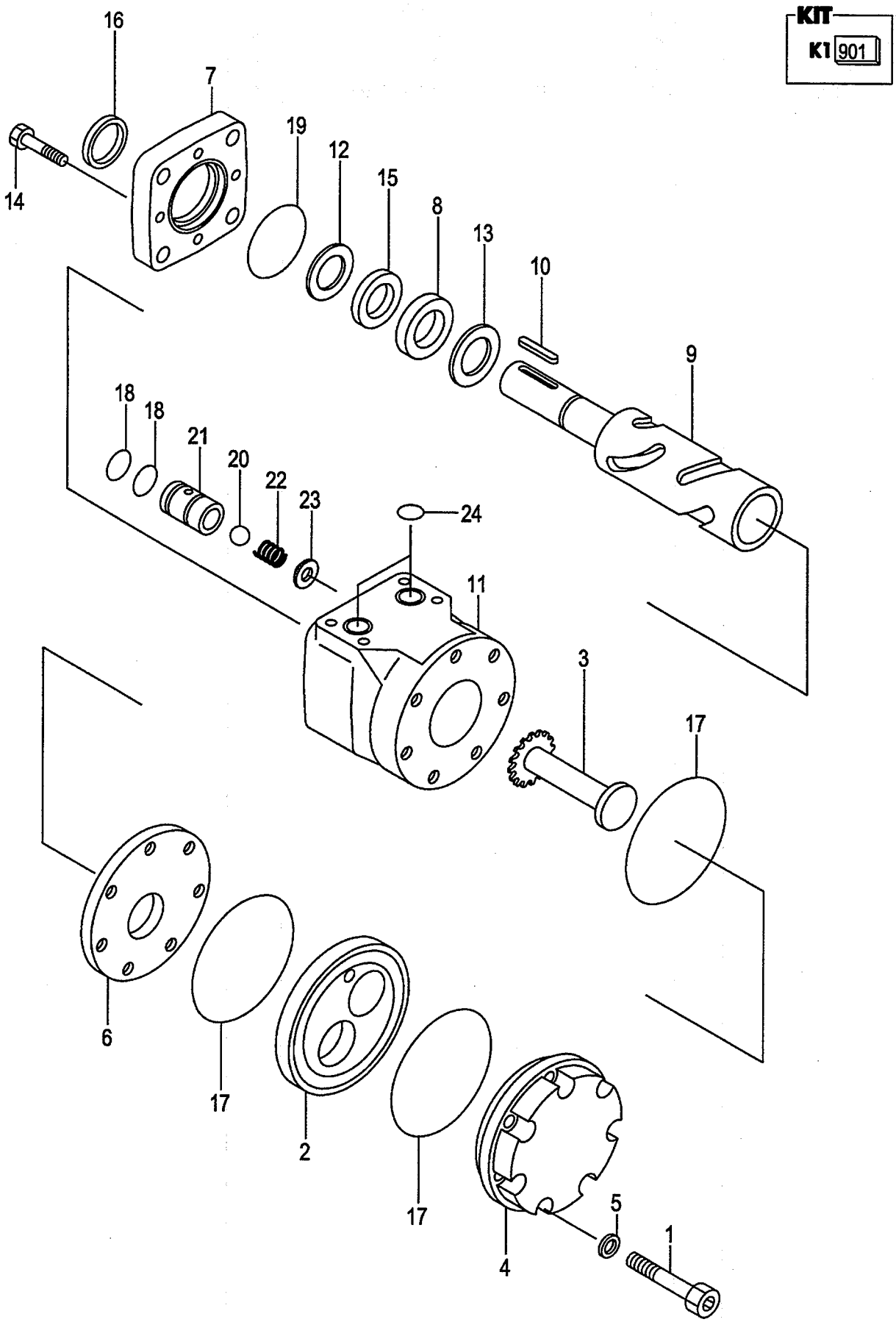

A:RD31C(VM/J)

Item No	Part No.	Mark	Description		Req'd	Remarks : Serial No.
A1	62059-12801		MOTOR-ASSY	ﾓｰﾀｱｯｾﾝ	1	INC.1-24
-	63059-12801		MOTOR-ASSY	ﾓｰﾀｱｯｾﾝ	1	[HIGH TORQUE] INC.1-24
901	01170-14030	K1	KIT,SEAL	ｼｰﾙｷｯﾄ	1	INC.5,15-19,24
1	NO PART NO.	#	SCREW	ｽｸﾘｭ	7	
2	NO PART NO.	#	GYRATOR	ｼﾞｬｲﾚｰﾀ	1	
-	NO PART NO.	#	GYRATOR	ｼﾞｬｲﾚｰﾀ	1	[HIGH TORQUE]
3	NO PART NO.	#	DRIVE	ﾄﾞﾗｲﾌﾞ	1	
4	NO PART NO.	#	CAP	ｷｬｯﾌﾟ	1	
5	NO PART NO.	*#	WASHER	ﾜｯｼｬ	7	
6	62159-13251		SPACER	ｽﾍﾟｰｻ	1	
7	62159-13041		FLANGE	ﾌﾗﾝｼﾞ	1	
8	62159-13051		RACE	ﾚｰｽ	1	
9	62159-13061		SHAFT,OUTPUT	ｼｬﾌﾄ	1	
10	62159-13101		KEY	ｷｰ	1	
11	62159-13261		HOUSING	ﾊｳｼﾞﾝｸﾞ	1	
12	NO PART NO.	#	RING	ﾘﾝｸﾞ	1	
13	62159-13081		BEARING	ﾍﾞｱﾘﾝｸﾞ	1	
14	62159-13091		SCREW	ｽｸﾘｭ	4	
15	NO PART NO.	#*	SEAL,OIL	ｼｰﾙ	1	
16	NO PART NO.	#*	SEAL,DUST	ｼｰﾙ	1	
17	NO PART NO.	#*	O-RING	Oﾘﾝｸﾞ	3	
18	NO PART NO.	#*	O-RING	Oﾘﾝｸﾞ	4	
19	NO PART NO.	#*	O-RING	Oﾘﾝｸﾞ	1	
A2	62159-13161		VALVE-ASSY,CHECK	ﾁｪｯｸﾊﾞﾙﾌﾞｱｯｾﾝ	2	INC.20-23
20	NO PART NO.	#	BALL	ﾎﾞｰﾙ	2	
21	NO PART NO.	#	BODY	ﾎﾞﾃﾞｨ	2	
22	NO PART NO.	#	SPRING	ｽﾌﾟﾘﾝｸﾞ	2	
23	NO PART NO.	#	WASHER	ﾜｯｼｬ	2	
24	NO PART NO.	#*	O-RING	Oﾘﾝｸﾞ	2	

FIG.130 HYDRAULIC LINE (CONTROL VALVE-CONNECTOR)

(A502AP10) ﾊｲﾄﾞﾛﾘｯｸﾗｲﾝ (ｺﾝﾄﾛｰﾙﾊﾞﾙﾌﾞ-ｺﾈｸﾀ)

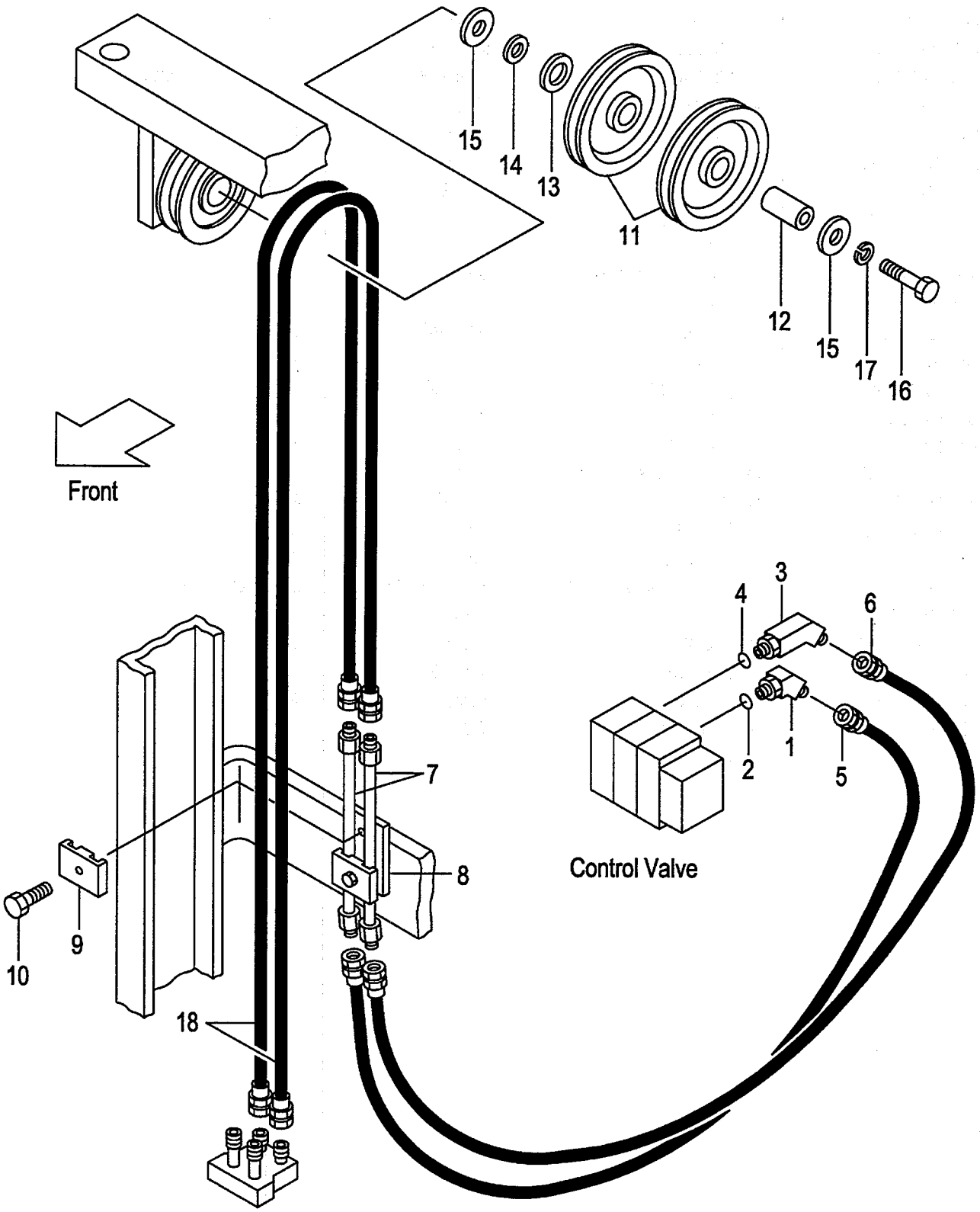

A:AP021F(VM/J)

Item No	Part No.	Mark	Description		Req'd	Remarks : Serial No.
A1	NO PART NO.	#	ELBOW-ASSY	ｴﾙﾎﾞｱｯｾﾝ	1	INC.1,2
1	63130-12071		ELBOW	ｴﾙﾎﾞ	1	
2	03320-00140		O-RING	Oﾘﾝｸﾞ	1	
A2	NO PART NO.	#	ELBOW-ASSY	ｴﾙﾎﾞｱｯｾﾝ	1	INC.3,4
3	62160-10011		ELBOW	ｴﾙﾎﾞ	1	
4	03320-00140		O-RING	Oﾘﾝｸﾞ	1	
5	62160-12302		HOSE	ﾎｰｽ	1	
6	62160-12312		HOSE	ﾎｰｽ	1	
7	62160-12401		PIPE	ﾊﾟｲﾌﾟ	2	
8	63680-12411		BRACKET	ﾌﾞﾗｹｯﾄ	1	
9	63810-12081		BAND	ﾊﾞﾝﾄﾞ	2	
10	01184-10035		BOLT	ﾎﾞﾙﾄ	2	
11	63130-15301		PULLEY	ﾌﾟｰﾘ	2	
12	62050-12301		COLLAR	ｶﾗｰ	1	
13	62050-12331		SPACER	ｽﾍﾟｰｻ	1	
14	62050-12021		SPACER	ｽﾍﾟｰｻ	1	
15	62150-12211		SPACER	ｽﾍﾟｰｻ	2	
16	01100-16085		BOLT	ﾎﾞﾙﾄ	1	
17	02010-00016		WASHER	ﾜｯｼｬ	1	
18	04601-33163		HOSE VM200	ﾎｰｽ	2	
-	04601-33187		HOSE VM225	ﾎｰｽ	2	
-	04601-33212		HOSE VM250	ﾎｰｽ	2	
-	04601-33231		HOSE VM270	ﾎｰｽ	2	
-	04601-33236		HOSE VM275	ﾎｰｽ	2	
-	04601-33261		HOSE VM300	ﾎｰｽ	2	
-	04601-33285		HOSE VM325	ﾎｰｽ	2	
-	04601-33290		HOSE VM330	ﾎｰｽ	2	
-	04601-33310		HOSE VM350	ﾎｰｽ	2	
-	04601-33325		HOSE VM366	ﾎｰｽ	2	
-	04601-33329		HOSE VM370	ﾎｰｽ	2	
-	04601-33334		HOSE VM375	ﾎｰｽ	2	
-	04601-33368		HOSE VM400	ﾎｰｽ	2	
-	04601-33393		HOSE VM425	ﾎｰｽ	2	
-	04601-33417		HOSE VM450	ﾎｰｽ	2	
-	04601-33442		HOSE VM475	ﾎｰｽ	2	
-	04601-33466		HOSE VM500	ﾎｰｽ	2	
-	04601-33526		HOSE VM550	ﾎｰｽ	2	
-	04601-33576		HOSE VM600	ﾎｰｽ	2	
19	62469-27001	+	DECAL,CAUTION	ﾃﾞｶﾙ	1	

HYDRAULIC LINE
FIG.131 (CONTROL VALVE-CONNECTOR)[AP4,4AP]
(A502AP20) ﾊｲﾄﾞﾛﾘｯｸﾗｲﾝ (ｺﾝﾄﾛｰﾙﾊﾞﾙﾌﾞ-ｺﾈｸﾀ)

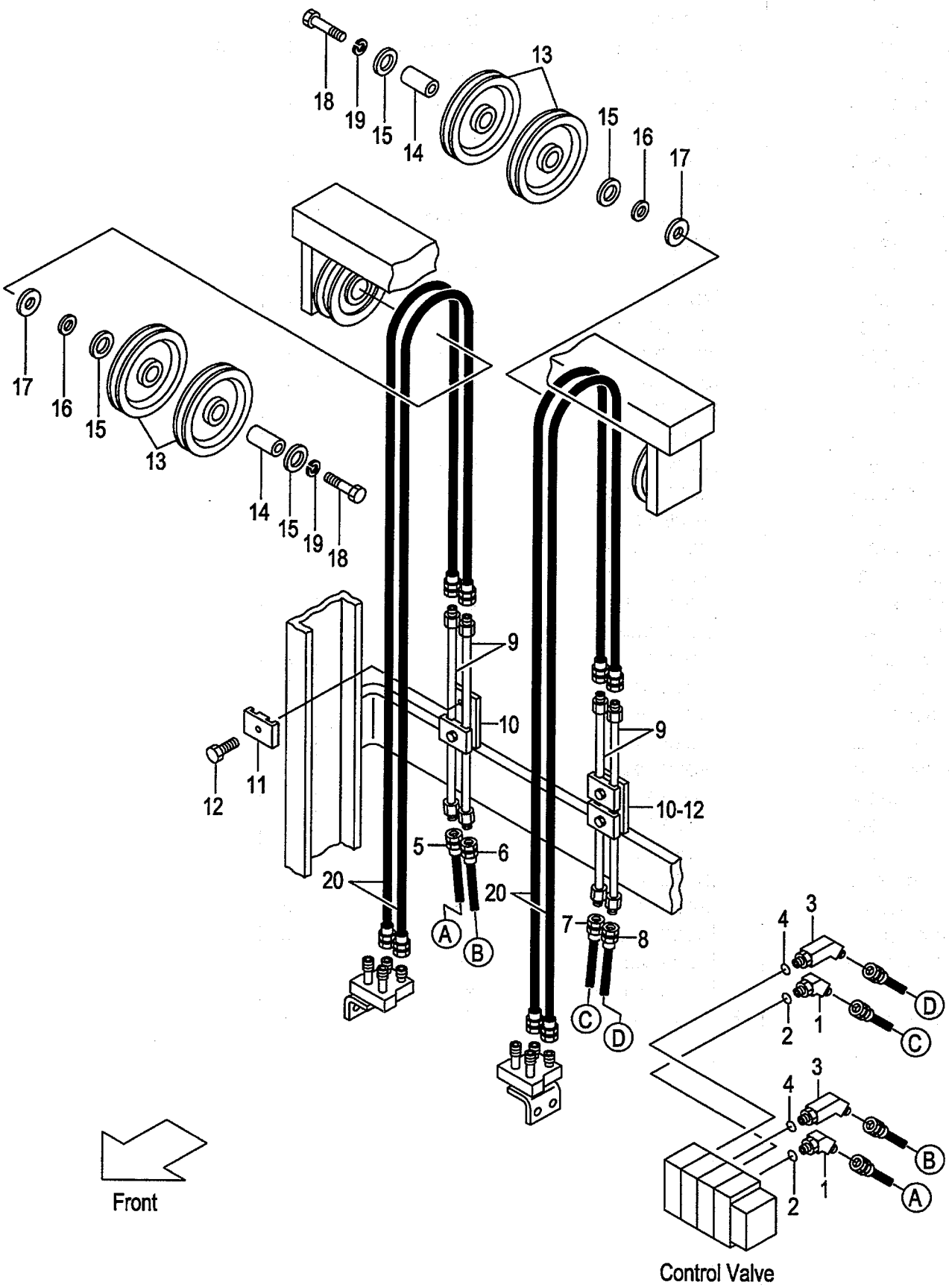

A:AP021F(VM/J)

Item No	Part No.	Mark	Description		Req'd	Remarks : Serial No.
A1	NO PART NO.	#	ELBOW-ASSY	ｴﾙﾎﾞｱｯｾﾝ	2	[AP4][4AP] INC.1,2
1	63130-12071		ELBOW	ｴﾙﾎﾞ	2	[AP4][4AP]
2	03320-00140		O-RING	Oﾘﾝｸﾞ	2	[AP4][4AP]
A2	NO PART NO.	#	ELBOW-ASSY	ｴﾙﾎﾞｱｯｾﾝ	2	[AP4][4AP] INC.3,4
3	62160-10011		ELBOW	ｴﾙﾎﾞ	2	[AP4][4AP]
4	03320-00140		O-RING	Oﾘﾝｸﾞ	2	[AP4][4AP]
5	62160-12302		HOSE	ﾎｰｽ	1	[AP4][4AP]
6	62160-12312		HOSE	ﾎｰｽ	1	[AP4][4AP]
7	62150-12522		HOSE	ﾎｰｽ	1	[AP4][4AP]
8	62150-12532		HOSE	ﾎｰｽ	1	[AP4][4AP]
9	62160-12401		PIPE	ﾊﾟｲﾌﾟ	4	[AP4][4AP]
10	63680-12411		BRACKET	ﾌﾞﾗｹｯﾄ	2	[AP4][4AP]
11	63810-12081		BAND	ﾊﾞﾝﾄﾞ	4	[AP4][4AP]
12	01184-10035		BOLT	ﾎﾞﾙﾄ	4	[AP4][4AP]
13	63130-15301		PULLEY	ﾌﾟｰﾘ	4	[AP4][4AP]
14	62050-12301		COLLAR	ｶﾗｰ	2	[AP4][4AP]
15	62050-12331		SPACER	ｽﾍﾟｰｻ	2	[AP4][4AP]
16	62050-12021		SPACER	ｽﾍﾟｰｻ	2	[AP4][4AP]
17	62150-12211		SPACER	ｽﾍﾟｰｻ	4	[AP4][4AP]
18	01100-16085		BOLT	ﾎﾞﾙﾄ	2	[AP4][4AP]
19	02010-00016		WASHER	ﾜｯｼｬ	2	[AP4][4AP]
20	04601-33163		HOSE VM200	ﾎｰｽ	4	[AP4][4AP]
-	04601-33187		HOSE VM225	ﾎｰｽ	4	[AP4][4AP]
-	04601-33212		HOSE VM250	ﾎｰｽ	4	[AP4][4AP]
-	04601-33231		HOSE VM270	ﾎｰｽ	4	[AP4][4AP]
-	04601-33236		HOSE VM275	ﾎｰｽ	4	[AP4][4AP]
-	04601-33261		HOSE VM300	ﾎｰｽ	4	[AP4][4AP]
-	04601-33285		HOSE VM325	ﾎｰｽ	4	[AP4][4AP]
-	04601-33290		HOSE VM330	ﾎｰｽ	4	[AP4][4AP]
-	04601-33310		HOSE VM350	ﾎｰｽ	4	[AP4][4AP]
-	04601-33325		HOSE VM366	ﾎｰｽ	4	[AP4][4AP]
-	04601-33329		HOSE VM370	ﾎｰｽ	4	[AP4][4AP]
-	04601-33334		HOSE VM375	ﾎｰｽ	4	[AP4][4AP]
-	04601-33368		HOSE VM400	ﾎｰｽ	4	[AP4][4AP]
-	04601-33393		HOSE VM425	ﾎｰｽ	4	[AP4][4AP]
-	04601-33417		HOSE VM450	ﾎｰｽ	4	[AP4][4AP]
-	04601-33442		HOSE VM475	ﾎｰｽ	4	[AP4][4AP]
-	04601-33466		HOSE VM500	ﾎｰｽ	4	[AP4][4AP]
-	04601-33526		HOSE VM550	ﾎｰｽ	4	[AP4][4AP]
-	04601-33576		HOSE VM600	ﾎｰｽ	4	[AP4][4AP]
21	62469-27001	+	DECAL,CAUTION	ﾃﾞｶﾙ	1	[AP4][4AP]

FIG.132 HYDRAULIC LINE (CONTROL VALVE-CONNECTOR)[AP5,5AP]

(A502AP30) ﾊｲﾄﾞﾛﾘｯｸﾗｲﾝ (ｺﾝﾄﾛｰﾙﾊﾞﾙﾌﾞ-ｺﾈｸﾀ)

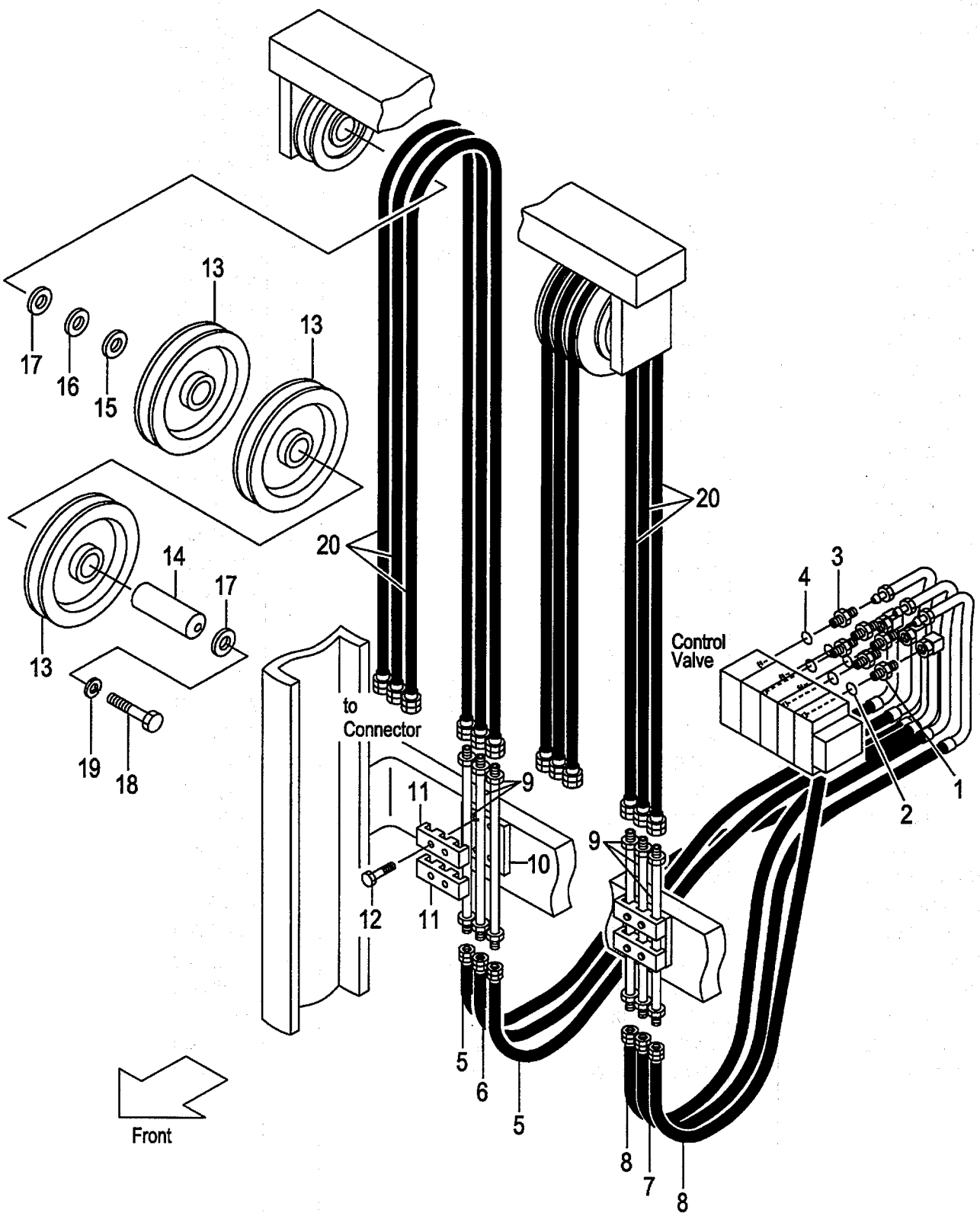

A:AP021F(VM/J)

Item No	Part No.	Mark	Description		Req'd	Remarks : Serial No.
A1	NO PART NO.	#	ELBOW-ASSY	ｴﾙﾎﾞｱｯｾﾝ	3	[AP5][5AP] INC.1,2
1	63130-12071		ELBOW	ｴﾙﾎﾞ	3	[AP5][5AP]
2	03320-00140		O-RING	Oﾘﾝｸﾞ	3	[AP5][5AP]
A2	NO PART NO.	#	ELBOW-ASSY	ｴﾙﾎﾞｱｯｾﾝ	3	[AP5][5AP] INC.3,4
3	62160-10011		ELBOW	ｴﾙﾎﾞ	3	[AP5][5AP]
4	03320-00140		O-RING	Oﾘﾝｸﾞ	3	[AP5][5AP]
5	62160-12302		HOSE	ﾎｰｽ	2	[AP5][5AP]
6	62160-12312		HOSE	ﾎｰｽ	1	[AP5][5AP]
7	62150-12522		HOSE	ﾎｰｽ	1	[AP5][5AP]
8	62150-12532		HOSE	ﾎｰｽ	2	[AP5][5AP]
9	62160-12401		PIPE	ﾊﾟｲﾌﾟ	6	[AP5][5AP]
10	62150-12241		BRACKET	ﾌﾞﾗｹｯﾄ	2	[AP5][5AP]
11	62150-12231		BAND	ﾊﾞﾝﾄﾞ	4	[AP5][5AP]
12	01184-10035		BOLT	ﾎﾞﾙﾄ	8	[AP5][5AP]
13	63130-15301		PULLEY	ﾌﾟｰﾘ	6	[AP5][5AP]
14	62050-12321		COLLAR	ｶﾗｰ	2	[AP5][5AP]
15	62050-12331		SPACER	ｽﾍﾟｰｻ	2	[AP5][5AP]
16	62050-12021		SPACER	ｽﾍﾟｰｻ	2	[AP5][5AP]
17	62150-12211		SPACER	ｽﾍﾟｰｻ	4	[AP5][5AP]
18	01100-16115		BOLT	ﾎﾞﾙﾄ	2	[AP5][5AP]
19	02010-00016		WASHER	ﾜｯｼｬ	2	[AP5][5AP]
20	04601-33163		HOSE VM200	ﾎｰｽ	6	[AP5][5AP]
-	04601-33187		HOSE VM225	ﾎｰｽ	6	[AP5][5AP]
-	04601-33212		HOSE VM250	ﾎｰｽ	6	[AP5][5AP]
-	04601-33231		HOSE VM270	ﾎｰｽ	6	[AP5][5AP]
-	04601-33236		HOSE VM275	ﾎｰｽ	6	[AP5][5AP]
-	04601-33261		HOSE VM300	ﾎｰｽ	6	[AP5][5AP]
-	04601-33285		HOSE VM325	ﾎｰｽ	6	[AP5][5AP]
-	04601-33290		HOSE VM330	ﾎｰｽ	6	[AP5][5AP]
-	04601-33310		HOSE VM350	ﾎｰｽ	6	[AP5][5AP]
-	04601-33325		HOSE VM366	ﾎｰｽ	6	[AP5][5AP]
-	04601-33329		HOSE VM370	ﾎｰｽ	6	[AP5][5AP]
-	04601-33334		HOSE VM375	ﾎｰｽ	6	[AP5][5AP]
-	04601-33368		HOSE VM400	ﾎｰｽ	6	[AP5][5AP]
-	04601-33393		HOSE VM425	ﾎｰｽ	6	[AP5][5AP]
-	04601-33417		HOSE VM450	ﾎｰｽ	6	[AP5][5AP]
-	04601-33442		HOSE VM475	ﾎｰｽ	6	[AP5][5AP]
-	04601-33466		HOSE VM500	ﾎｰｽ	6	[AP5][5AP]
-	04601-33526		HOSE VM550	ﾎｰｽ	6	[AP5][5AP]
-	04601-33576		HOSE VM600	ﾎｰｽ	6	[AP5][5AP]
21	62469-27001	+	DECAL,CAUTION	ﾃﾞｶﾙ	1	[AP5][5AP]

HYDRAULIC LINE
FIG.133 (CONTROL VALVE-CONNECTOR)[4AP,HFW]
(A502AP40) ﾊｲﾄﾞﾛﾘｯｸﾗｲﾝ (ｺﾝﾄﾛｰﾙﾊﾞﾙﾌﾞ-ｺﾈｸﾀ)

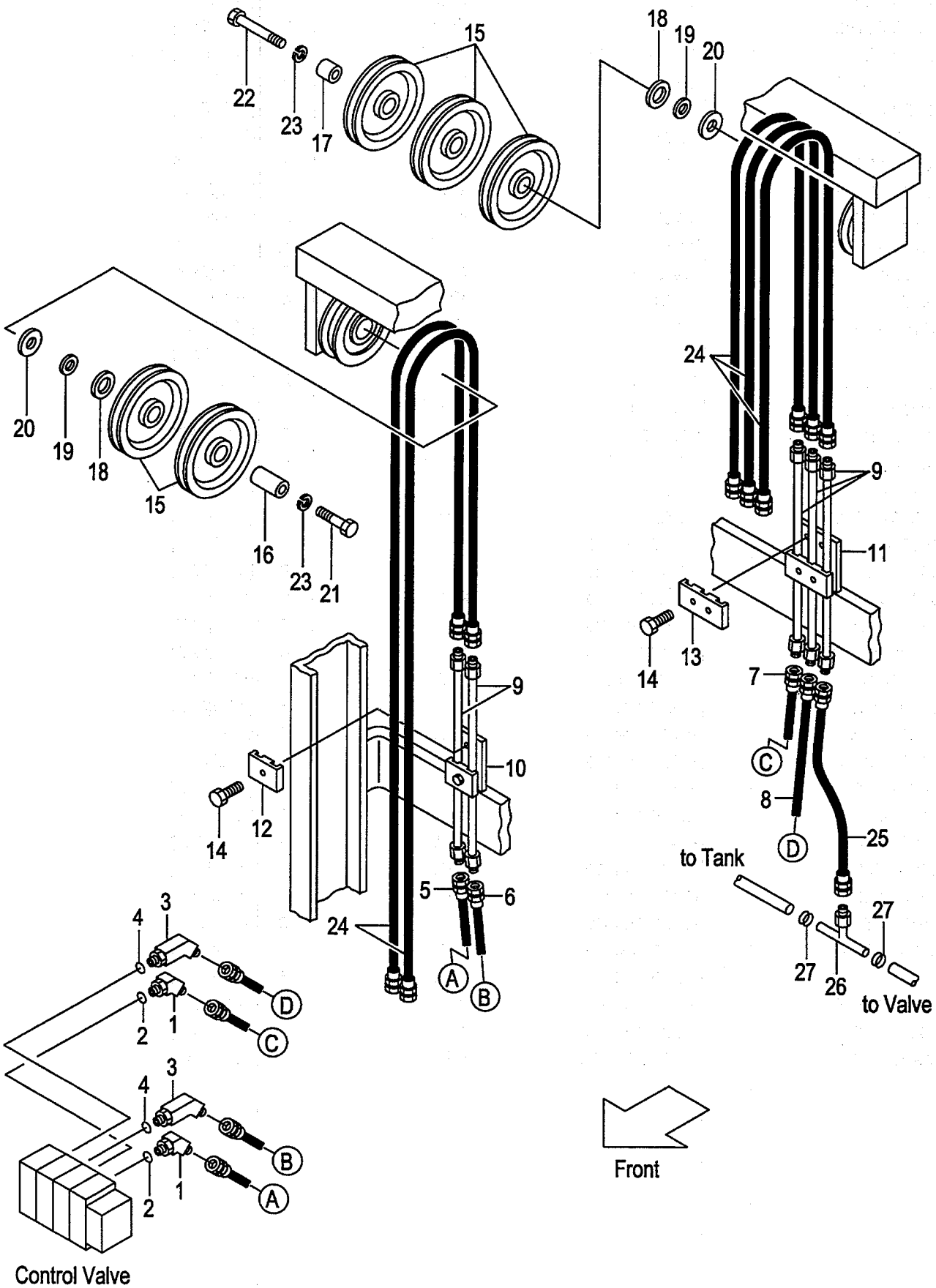

A:AP021F(VM/J)

Item No	Part No.	Mark	Description		Req'd	Remarks : Serial No.
A1	NO PART NO.	#	ELBOW-ASSY	ｴﾙﾎﾞｱｯｾﾝ	2	[4AP][HFW] INC.1,2
1	63130-12071		ELBOW	ｴﾙﾎﾞ	2	[4AP][HFW]
2	03320-00140		O-RING	Oﾘﾝｸﾞ	2	[4AP][HFW]
A2	NO PART NO.	#	ELBOW-ASSY	ｴﾙﾎﾞｱｯｾﾝ	2	[4AP][HFW] INC.3,4
3	62160-10011		ELBOW	ｴﾙﾎﾞ	2	[4AP][HFW]
4	03320-00140		O-RING	Oﾘﾝｸﾞ	2	[4AP][HFW]
5	62160-12302		HOSE	ﾎｰｽ	1	[4AP][HFW]
6	62160-12312		HOSE	ﾎｰｽ	1	[4AP][HFW]
7	62150-12522		HOSE	ﾎｰｽ	1	[4AP][HFW]
8	62150-12532		HOSE	ﾎｰｽ	1	[4AP][HFW]
9	62160-12401		PIPE	ﾊﾟｲﾌﾟ	5	[4AP][HFW]
10	63680-12411		BRACKET	ﾌﾞﾗｹｯﾄ	1	[4AP][HFW]
11	62150-12241		BRACKET	ﾌﾞﾗｹｯﾄ	1	[4AP][HFW]
12	63810-12081		BAND	ﾊﾞﾝﾄﾞ	2	[4AP][HFW]
13	62150-12231		BAND	ﾊﾞﾝﾄﾞ	2	[4AP][HFW]
14	01184-10035		BOLT	ﾎﾞﾙﾄ	6	[4AP][HFW]
15	63130-15301		PULLEY	ﾌﾟｰﾘ	5	[4AP][HFW]
16	62050-12301		COLLAR	ｶﾗｰ	1	[4AP][HFW]
17	62050-12321		COLLAR	ｶﾗｰ	1	[4AP][HFW]
18	62050-12331		SPACER	ｽﾍﾟｰｻ	2	[4AP][HFW]
19	62050-12021		SPACER	ｽﾍﾟｰｻ	2	[4AP][HFW]
20	62150-12211		SPACER	ｽﾍﾟｰｻ	4	[4AP][HFW]
21	01100-16085		BOLT	ﾎﾞﾙﾄ	1	[4AP][HFW]
22	01100-16115		BOLT	ﾎﾞﾙﾄ	1	[4AP][HFW]
23	02010-00016		WASHER	ﾜｯｼｬ	2	[4AP][HFW]
24	04601-33163		HOSE VM200	ﾎｰｽ	5	[4AP][HFW]
-	04601-33187		HOSE VM225	ﾎｰｽ	5	[4AP][HFW]
-	04601-33212		HOSE VM250	ﾎｰｽ	5	[4AP][HFW]
-	04601-33231		HOSE VM270	ﾎｰｽ	5	[4AP][HFW]
-	04601-33236		HOSE VM275	ﾎｰｽ	5	[4AP][HFW]
-	04601-33261		HOSE VM300	ﾎｰｽ	5	[4AP][HFW]
-	04601-33285		HOSE VM325	ﾎｰｽ	5	[4AP][HFW]
-	04601-33290		HOSE VM330	ﾎｰｽ	5	[4AP][HFW]
-	04601-33310		HOSE VM350	ﾎｰｽ	5	[4AP][HFW]
-	04601-33325		HOSE VM366	ﾎｰｽ	5	[4AP][HFW]
-	04601-33329		HOSE VM370	ﾎｰｽ	5	[4AP][HFW]
-	04601-33334		HOSE VM375	ﾎｰｽ	5	[4AP][HFW]
-	04601-33368		HOSE VM400	ﾎｰｽ	5	[4AP][HFW]
-	04601-33393		HOSE VM425	ﾎｰｽ	5	[4AP][HFW]
-	04601-33417		HOSE VM450	ﾎｰｽ	5	[4AP][HFW]
-	04601-33442		HOSE VM475	ﾎｰｽ	5	[4AP][HFW]
-	04601-33466		HOSE VM500	ﾎｰｽ	5	[4AP][HFW]
-	04601-33526		HOSE VM550	ﾎｰｽ	5	[4AP][HFW]
-	04601-33576		HOSE VM600	ﾎｰｽ	5	[4AP][HFW]
25	04451-03050		HOSE	ﾎｰｽ	1	[4AP][HFW]
26	62150-14011		PIPE	ﾊﾟｲﾌﾟ	1	[4AP][HFW]
27	63110-20261		CLIP	ｸﾘｯﾌﾟ	2	[4AP][HFW]
28	62469-27001	+	DECAL,CAUTION	ﾃﾞｶﾙ	1	[4AP][HFW]

HYDRAULIC LINE
FIG.134 (CONTROL VALVE-CONNECTOR)[4AP,PPC]
(A502AP50) ﾊｲﾄﾞﾛﾘｯｸﾗｲﾝ (ｺﾝﾄﾛｰﾙﾊﾞﾙﾌﾞ-ｺﾈｸﾀ)

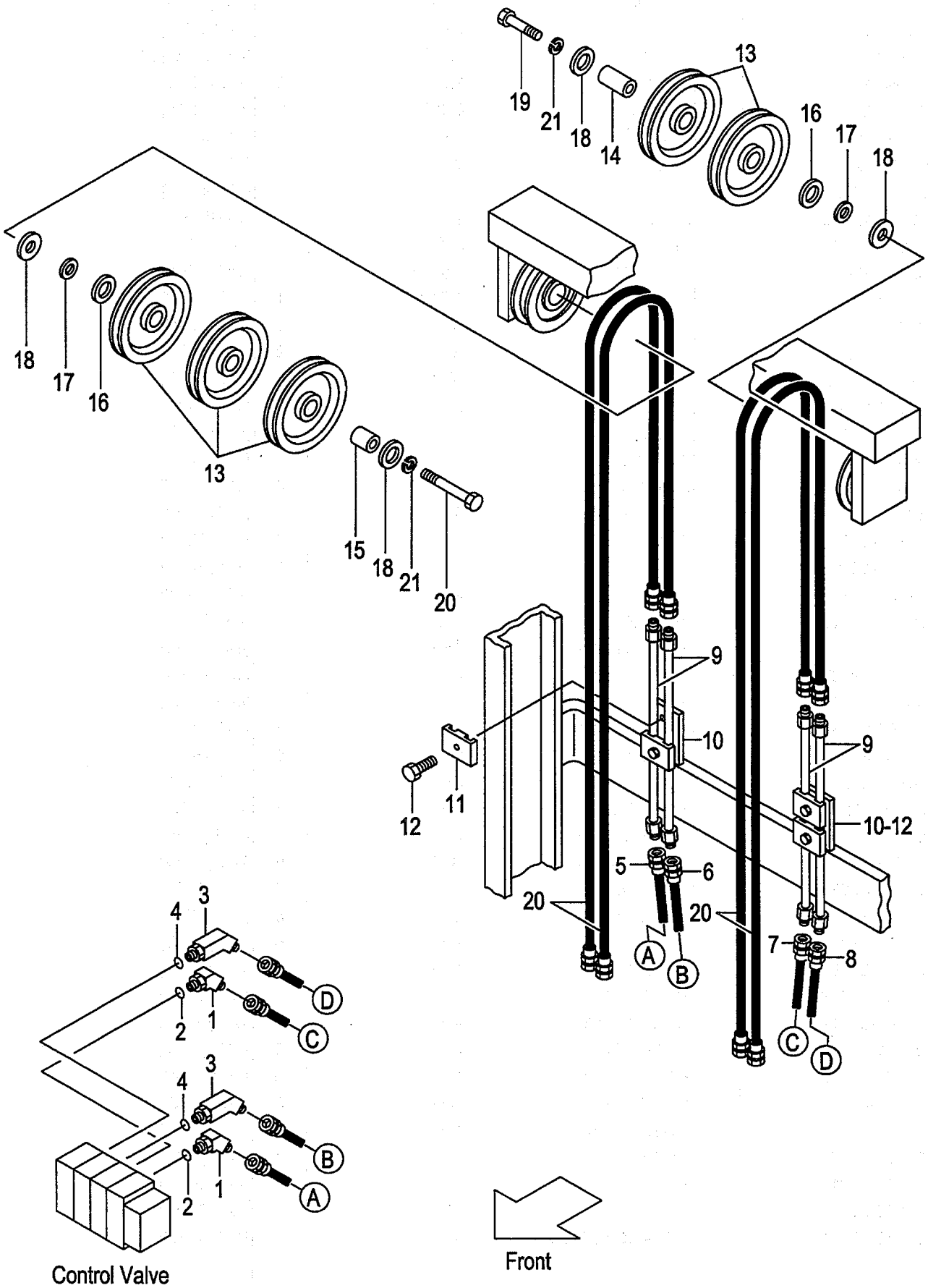

A:AP021F(VM/J)

Item No	Part No.	Mark	Description		Req'd	Remarks : Serial No.
A1	NO PART NO.	#	ELBOW-ASSY	ｴﾙﾎﾞｱｯｾﾝ	2	[4AP][PPC] INC.1,2
1	63130-12071		ELBOW	ｴﾙﾎﾞ	2	[4AP][PPC]
2	03320-00140		O-RING	Oﾘﾝｸﾞ	2	[4AP][PPC]
A2	NO PART NO.	#	ELBOW-ASSY	ｴﾙﾎﾞｱｯｾﾝ	2	[4AP][PPC] INC.3,4
3	62160-10011		ELBOW	ｴﾙﾎﾞ	2	[4AP][PPC]
4	03320-00140		O-RING	Oﾘﾝｸﾞ	2	[4AP][PPC]
5	62160-12302		HOSE	ﾎｰｽ	1	[4AP][PPC]
6	62160-12312		HOSE	ﾎｰｽ	1	[4AP][PPC]
7	62150-12522		HOSE	ﾎｰｽ	1	[4AP][PPC]
8	62150-12532		HOSE	ﾎｰｽ	1	[4AP][PPC]
9	62160-12401		PIPE	ﾊﾟｲﾌﾟ	4	[4AP][PPC]
10	63680-12411		BRACKET	ﾌﾞﾗｹｯﾄ	1	[4AP][PPC]
11	63810-12081		BAND	ﾊﾞﾝﾄﾞ	4	[4AP][PPC]
12	01184-10035		BOLT	ﾎﾞﾙﾄ	4	[4AP][PPC]
13	63130-15301		PULLEY	ﾌﾟｰﾘ	5	[4AP][PPC]
14	62050-12301		COLLAR	ｶﾗｰ	1	[4AP][PPC]
15	62050-12321		COLLAR	ｶﾗｰ	1	[4AP][PPC]
16	62050-12331		SPACER	ｽﾍﾟｰｻ	2	[4AP][PPC]
17	62050-12021		SPACER	ｽﾍﾟｰｻ	2	[4AP][PPC]
18	62150-12211		SPACER	ｽﾍﾟｰｻ	4	[4AP][PPC]
19	01100-16085		BOLT	ﾎﾞﾙﾄ	1	[4AP][PPC]
20	01100-16115		BOLT	ﾎﾞﾙﾄ	1	[4AP][PPC]
21	02010-00016		WASHER	ﾜｯｼｬ	2	[4AP][PPC]
22	04601-33163		HOSE VM200	ﾎｰｽ	4	[4AP][PPC]
-	04601-33187		HOSE VM225	ﾎｰｽ	4	[4AP][PPC]
-	04601-33212		HOSE VM250	ﾎｰｽ	4	[4AP][PPC]
-	04601-33231		HOSE VM270	ﾎｰｽ	4	[4AP][PPC]
-	04601-33236		HOSE VM275	ﾎｰｽ	4	[4AP][PPC]
-	04601-33261		HOSE VM300	ﾎｰｽ	4	[4AP][PPC]
-	04601-33285		HOSE VM325	ﾎｰｽ	4	[4AP][PPC]
-	04601-33290		HOSE VM330	ﾎｰｽ	4	[4AP][PPC]
-	04601-33310		HOSE VM350	ﾎｰｽ	4	[4AP][PPC]
-	04601-33325		HOSE VM366	ﾎｰｽ	4	[4AP][PPC]
-	04601-33329		HOSE VM370	ﾎｰｽ	4	[4AP][PPC]
-	04601-33334		HOSE VM375	ﾎｰｽ	4	[4AP][PPC]
-	04601-33368		HOSE VM400	ﾎｰｽ	4	[4AP][PPC]
-	04601-33393		HOSE VM425	ﾎｰｽ	4	[4AP][PPC]
-	04601-33417		HOSE VM450	ﾎｰｽ	4	[4AP][PPC]
-	04601-33442		HOSE VM475	ﾎｰｽ	4	[4AP][PPC]
-	04601-33466		HOSE VM500	ﾎｰｽ	4	[4AP][PPC]
-	04601-33526		HOSE VM550	ﾎｰｽ	4	[4AP][PPC]
-	04601-33576		HOSE VM600	ﾎｰｽ	4	[4AP][PPC]
23	62469-27001	+	DECAL,CAUTION	ﾃﾞｶﾙ	1	[4AP][PPC]

FIG.135 HYDRAULIC LINE (CONTROL VALVE-CONNECTOR)[ACC,PR]

(A502AP60) ﾊｲﾄﾞﾛﾘｯｸﾗｲﾝ (ｺﾝﾄﾛｰﾙﾊﾞﾙﾌﾞ-ｺﾈｸﾀ)

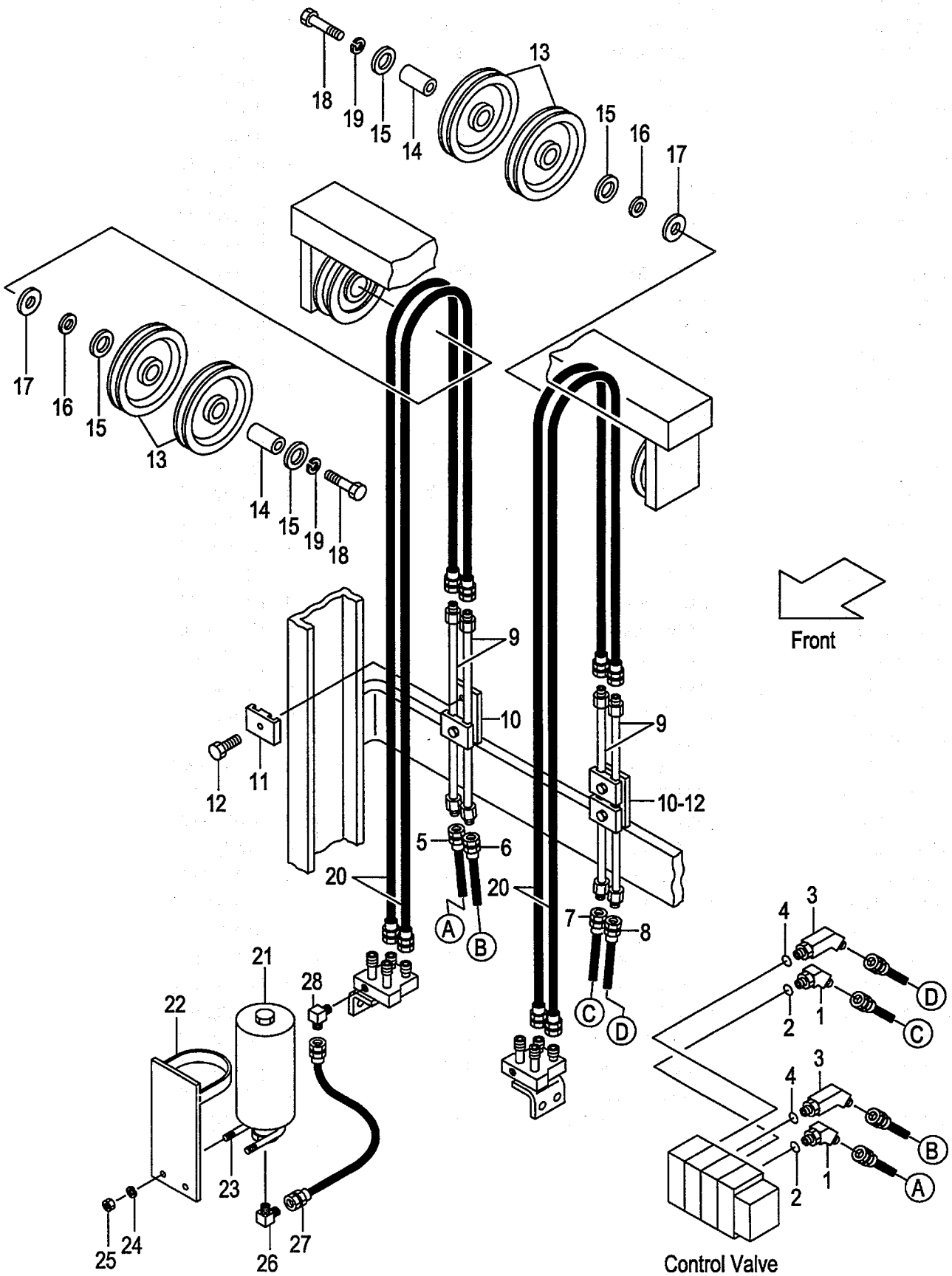

A:AP021F(VM/J)

Item No	Part No.	Mark	Description		Req'd	Remarks : Serial No.
A1	NO PART NO.	#	ELBOW-ASSY	ｴﾙﾎﾞｱｯｾﾝ	2	[ACC][PR] INC.1,2
1	63130-12071		ELBOW	ｴﾙﾎﾞ	2	[ACC][PR]
2	03320-00140		O-RING	Oﾘﾝｸﾞ	2	[ACC][PR]
A2	NO PART NO.	#	ELBOW-ASSY	ｴﾙﾎﾞｱｯｾﾝ	2	[ACC][PR] INC.3,4
3	62160-10011		ELBOW	ｴﾙﾎﾞ	2	[ACC][PR]
4	03320-00140		O-RING	Oﾘﾝｸﾞ	2	[ACC][PR]
5	62160-12302		HOSE	ﾎｰｽ	1	[ACC][PR]
6	62160-12312		HOSE	ﾎｰｽ	1	[ACC][PR]
7	62150-12522		HOSE	ﾎｰｽ	1	[ACC][PR]
8	62150-12532		HOSE	ﾎｰｽ	1	[ACC][PR]
9	62160-12401		PIPE	ﾊﾟｲﾌﾟ	4	[ACC][PR]
10	63680-12411		BRACKET	ﾌﾞﾗｹｯﾄ	2	[ACC][PR]
11	63810-12081		BAND	ﾊﾞﾝﾄﾞ	4	[ACC][PR]
12	01184-10035		BOLT	ﾎﾞﾙﾄ	4	[ACC][PR]
13	63130-15301		PULLEY	ﾌﾟｰﾘ	4	[ACC][PR]
14	62050-12301		COLLAR	ｶﾗｰ	2	[ACC][PR]
15	62050-12331		SPACER	ｽﾍﾟｰｻ	2	[ACC][PR]
16	62050-12021		SPACER	ｽﾍﾟｰｻ	2	[ACC][PR]
17	62150-12211		SPACER	ｽﾍﾟｰｻ	4	[ACC][PR]
18	01100-16085		BOLT	ﾎﾞﾙﾄ	2	[ACC][PR]
19	02010-00016		WASHER	ﾜｯｼｬ	2	[ACC][PR]
20	04601-33163		HOSE VM200	ﾎｰｽ	4	[ACC][PR]
-	04601-33187		HOSE VM225	ﾎｰｽ	4	[ACC][PR]
-	04601-33212		HOSE VM250	ﾎｰｽ	4	[ACC][PR]
-	04601-33231		HOSE VM270	ﾎｰｽ	4	[ACC][PR]
-	04601-33236		HOSE VM275	ﾎｰｽ	4	[ACC][PR]
-	04601-33261		HOSE VM300	ﾎｰｽ	4	[ACC][PR]
-	04601-33285		HOSE VM325	ﾎｰｽ	4	[ACC][PR]
-	04601-33290		HOSE VM330	ﾎｰｽ	4	[ACC][PR]
-	04601-33310		HOSE VM350	ﾎｰｽ	4	[ACC][PR]
-	04601-33325		HOSE VM366	ﾎｰｽ	4	[ACC][PR]
-	04601-33329		HOSE VM370	ﾎｰｽ	4	[ACC][PR]
-	04601-33334		HOSE VM375	ﾎｰｽ	4	[ACC][PR]
-	04601-33368		HOSE VM400	ﾎｰｽ	4	[ACC][PR]
-	04601-33393		HOSE VM425	ﾎｰｽ	4	[ACC][PR]
-	04601-33417		HOSE VM450	ﾎｰｽ	4	[ACC][PR]
-	04601-33442		HOSE VM475	ﾎｰｽ	4	[ACC][PR]
-	04601-33466		HOSE VM500	ﾎｰｽ	4	[ACC][PR]
-	04601-33526		HOSE VM550	ﾎｰｽ	4	[ACC][PR]
-	04601-33576		HOSE VM600	ﾎｰｽ	4	[ACC][PR]
21	63130-15033		ACCUMULATOR	ｱｷｭﾑﾚｰﾀ	1	[ACC][PR]
22	62150-12551		BRACKET	ﾌﾞﾗｹｯﾄ	1	[ACC][PR]
23	62130-12171		U-BOLT	Uﾎﾞﾙﾄ	1	[ACC][PR]
24	02010-00008		WASHER	ﾜｯｼｬ	2	[ACC][PR]
25	01400-00008		NUT	ﾅｯﾄ	2	[ACC][PR]
26	63110-12181		ELBOW	ｴﾙﾎﾞ	1	[ACC][PR]
27	63130-31040		HOSE	ﾎｰｽ	1	[ACC][PR]
28	53110-12341		ELBOW	ｴﾙﾎﾞ	1	[ACC][PR]
29	62469-27001	+	DECAL,CAUTION	ﾃﾞｶﾙ	1	[ACC][PR]

HYDRAULIC LINE
FIG.136 (CONTROL VALVE-CONNECTOR)[ACC,LG]
(A502AP70) ﾊｲﾄﾞﾛﾘｯｸﾗｲﾝ (ｺﾝﾄﾛｰﾙﾊﾞﾙﾌﾞ-ｺﾈｸﾀ)

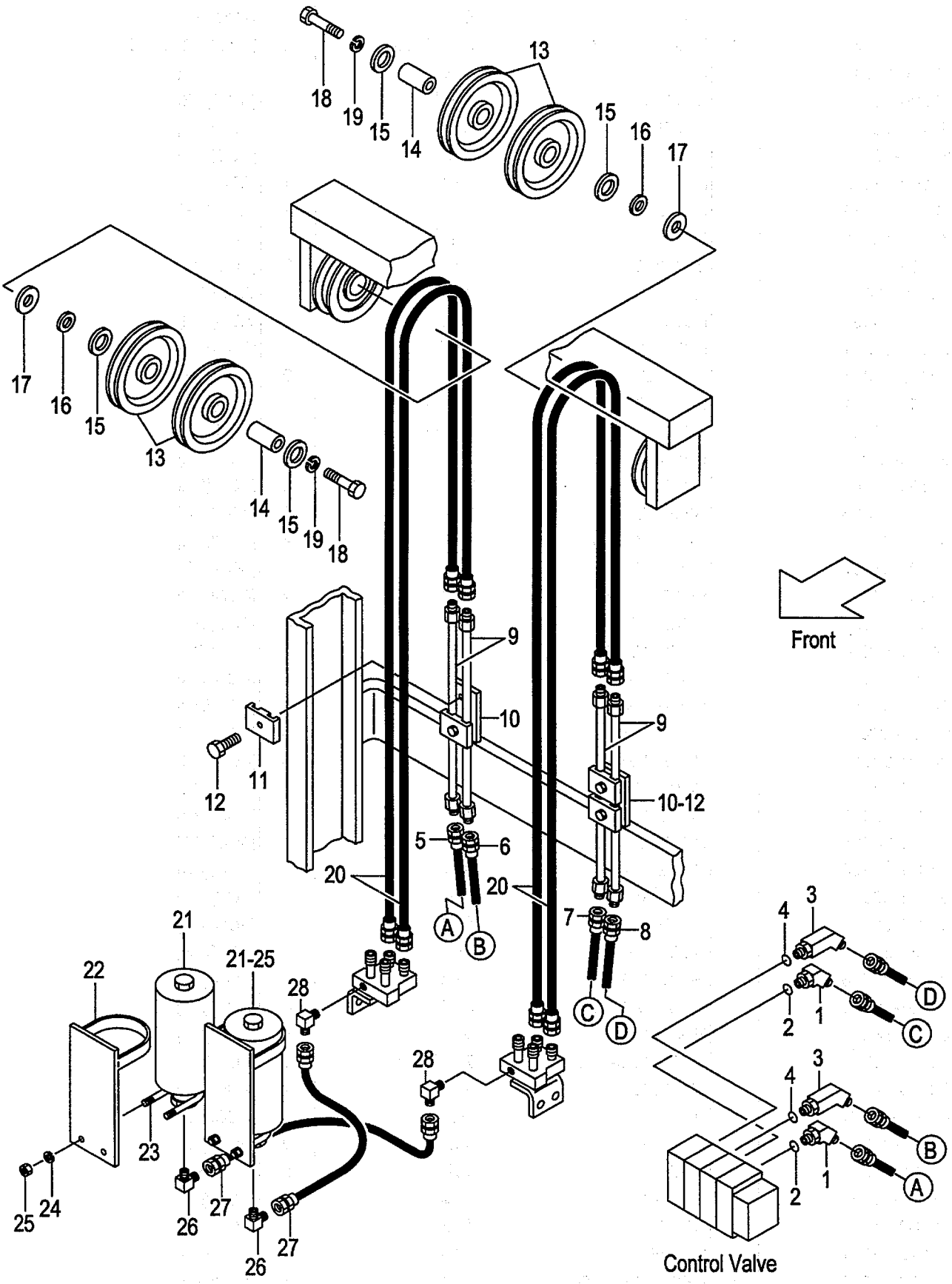

A:AP021F(VM/J)

Item No	Part No.	Mark	Description		Req'd	Remarks : Serial No.
A1	NO PART NO.	#	ELBOW-ASSY	ｴﾙﾎﾞｱｯｾﾝ	2	[ACC][LG] INC.1,2
1	63130-12071		ELBOW	ｴﾙﾎﾞ	2	[ACC][LG]
2	03320-00140		O-RING	Oﾘﾝｸﾞ	2	[ACC][LG]
A2	NO PART NO.	#	ELBOW-ASSY	ｴﾙﾎﾞｱｯｾﾝ	2	[ACC][LG] INC.3,4
3	62160-10011		ELBOW	ｴﾙﾎﾞ	2	[ACC][LG]
4	03320-00140		O-RING	Oﾘﾝｸﾞ	2	[ACC][LG]
5	62160-12302		HOSE	ﾎｰｽ	1	[ACC][LG]
6	62160-12312		HOSE	ﾎｰｽ	1	[ACC][LG]
7	62150-12522		HOSE	ﾎｰｽ	1	[ACC][LG]
8	62150-12532		HOSE	ﾎｰｽ	1	[ACC][LG]
9	62160-12401		PIPE	ﾊﾟｲﾌﾟ	4	[ACC][LG]
10	63680-12411		BRACKET	ﾌﾞﾗｹｯﾄ	2	[ACC][LG]
11	63810-12081		BAND	ﾊﾞﾝﾄﾞ	4	[ACC][LG]
12	01184-10035		BOLT	ﾎﾞﾙﾄ	4	[ACC][LG]
13	63130-15301		PULLEY	ﾌﾟｰﾘ	4	[ACC][LG]
14	62050-12301		COLLAR	ｶﾗｰ	2	[ACC][LG]
15	62050-12331		SPACER	ｽﾍﾟｰｻ	2	[ACC][LG]
16	62050-12021		SPACER	ｽﾍﾟｰｻ	2	[ACC][LG]
17	62150-12211		SPACER	ｽﾍﾟｰｻ	4	[ACC][LG]
18	01100-16085		BOLT	ﾎﾞﾙﾄ	2	[ACC][LG]
19	02010-00016		WASHER	ﾜｯｼｬ	2	[ACC][LG]
20	04601-33163		HOSE VM200	ﾎｰｽ	4	[ACC][LG]
-	04601-33187		HOSE VM225	ﾎｰｽ	4	[ACC][LG]
-	04601-33212		HOSE VM250	ﾎｰｽ	4	[ACC][LG]
-	04601-33231		HOSE VM270	ﾎｰｽ	4	[ACC][LG]
-	04601-33236		HOSE VM275	ﾎｰｽ	4	[ACC][LG]
-	04601-33261		HOSE VM300	ﾎｰｽ	4	[ACC][LG]
-	04601-33285		HOSE VM325	ﾎｰｽ	4	[ACC][LG]
-	04601-33290		HOSE VM330	ﾎｰｽ	4	[ACC][LG]
-	04601-33310		HOSE VM350	ﾎｰｽ	4	[ACC][LG]
-	04601-33325		HOSE VM366	ﾎｰｽ	4	[ACC][LG]
-	04601-33329		HOSE VM370	ﾎｰｽ	4	[ACC][LG]
-	04601-33334		HOSE VM375	ﾎｰｽ	4	[ACC][LG]
-	04601-33368		HOSE VM400	ﾎｰｽ	4	[ACC][LG]
-	04601-33393		HOSE VM425	ﾎｰｽ	4	[ACC][LG]
-	04601-33417		HOSE VM450	ﾎｰｽ	4	[ACC][LG]
-	04601-33442		HOSE VM475	ﾎｰｽ	4	[ACC][LG]
-	04601-33466		HOSE VM500	ﾎｰｽ	4	[ACC][LG]
-	04601-33526		HOSE VM550	ﾎｰｽ	4	[ACC][LG]
-	04601-33576		HOSE VM600	ﾎｰｽ	4	[ACC][LG]
21	63130-15033		ACCUMULATOR	ｱｷｭﾑﾚｰﾀ	2	[ACC][LG]
22	62150-12551		BRACKET	ﾌﾞﾗｹｯﾄ	2	[ACC][LG]
23	62130-12171		U-BOLT	Uﾎﾞﾙﾄ	2	[ACC][LG]
24	02010-00008		WASHER	ﾜｯｼｬ	4	[ACC][LG]
25	01400-00008		NUT	ﾅｯﾄ	4	[ACC][LG]
26	63110-12181		ELBOW	ｴﾙﾎﾞ	2	[ACC][LG]
27	63130-31040		HOSE	ﾎｰｽ	2	[ACC][LG]
28	53110-12341		ELBOW	ｴﾙﾎﾞ	2	[ACC][LG]
29	62469-27001	+	DECAL,CAUTION	ﾃﾞｶﾙ	1	[ACC][LG]

FIG.137 HYDRAULIC LINE (RELIEF VALVE)[VRV]

(A502AP80) ﾊｲﾄﾞﾛﾘｯｸﾗｲﾝ (ﾘﾘｰﾌﾊﾞﾙﾌﾞ)

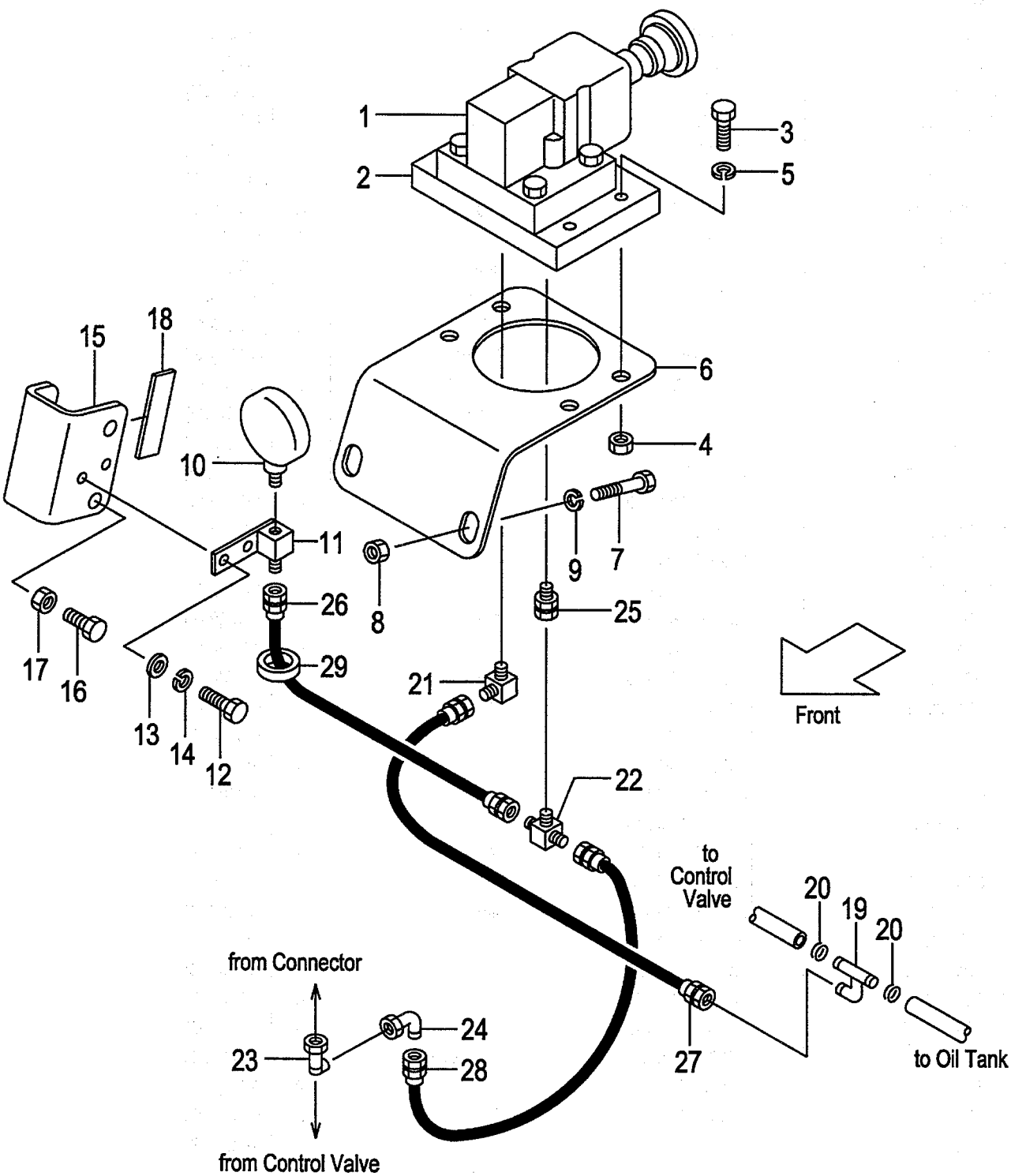

A:AP021F(VM/J)

Item No	Part No.	Mark	Description		Req'd	Remarks : Serial No.
1	63130-15771		VALVE,RELIEF	ﾊﾞﾙﾌﾞ	1	[VRV]
2	63130-15921		PLATE	ﾌﾟﾚｰﾄ	1	[VRV]
3	01181-08030		BOLT	ﾎﾞﾙﾄ	4	[VRV]
4	01400-00008		NUT	ﾅｯﾄ	4	[VRV]
5	02010-00008		WASHER	ﾜｯｼｬ	4	[VRV]
6	61170-10151		BRACKET	ﾌﾞﾗｹｯﾄ	1	[VRV]
7	01181-10025		BOLT	ﾎﾞﾙﾄ	2	[VRV]
8	01400-00010		NUT	ﾅｯﾄ	2	[VRV]
9	02010-00010		WASHER	ﾜｯｼｬ	2	[VRV]
10	63110-20221		GAUGE	ｹﾞｰｼﾞ	1	[VRV]
11	62150-14041		STUD	ｽﾀｯﾄﾞ	1	[VRV]
12	01100-08012		BOLT	ﾎﾞﾙﾄ	2	[VRV]
13	02000-00008		WASHER	ﾜｯｼｬ	2	[VRV]
14	02010-00008		WASHER	ﾜｯｼｬ	2	[VRV]
15	61170-10101		BRACKET	ﾌﾞﾗｹｯﾄ	1	[VRV]
16	01100-10016		BOLT	ﾎﾞﾙﾄ	2	[VRV]
17	01402-00010		NUT	ﾅｯﾄ	2	[VRV]
18	61170-10111		RUBBER	ﾗﾊﾞｰ	1	[VRV]
19	62150-14011		PIPE	ﾊﾟｲﾌﾟ	1	[VRV]
20	63110-20261		CLIP	ｸﾘｯﾌﾟ	2	[VRV]
21	53110-12121		ELBOW	ｴﾙﾎﾞ	1	[VRV]
22	61170-10201		THREE-WAY	ｽﾘｰｳｴｲ	1	[VRV]
23	62150-14001		THREE-WAY	ｽﾘｰｳｴｲ	1	[VRV]
24	62150-14311		ELBOW	ｴﾙﾎﾞ	1	[VRV]
25	04138-00303		UNION	ﾕﾆｵﾝ	1	[VRV]
26	63130-31055		HOSE	ﾎｰｽ	1	[VRV]
27	63130-21085		HOSE	ﾎｰｽ	1	[VRV]
28	63130-21120		HOSE	ﾎｰｽ	1	[VRV]
29	04913-11300		BAND	ﾊﾞﾝﾄﾞ	2	[VRV]
30	63130-12751	+	PLUG	ﾌﾟﾗｸﾞ	1	[VRV]

FIG.138 HYDRAULIC LINE (CONTROL VALVE-CONNECTOR)

(A502AP90) ﾊｲﾄﾞﾛﾘｯｸﾗｲﾝ (ｺﾝﾄﾛｰﾙﾊﾞﾙﾌﾞ-ｺﾈｸﾀ)

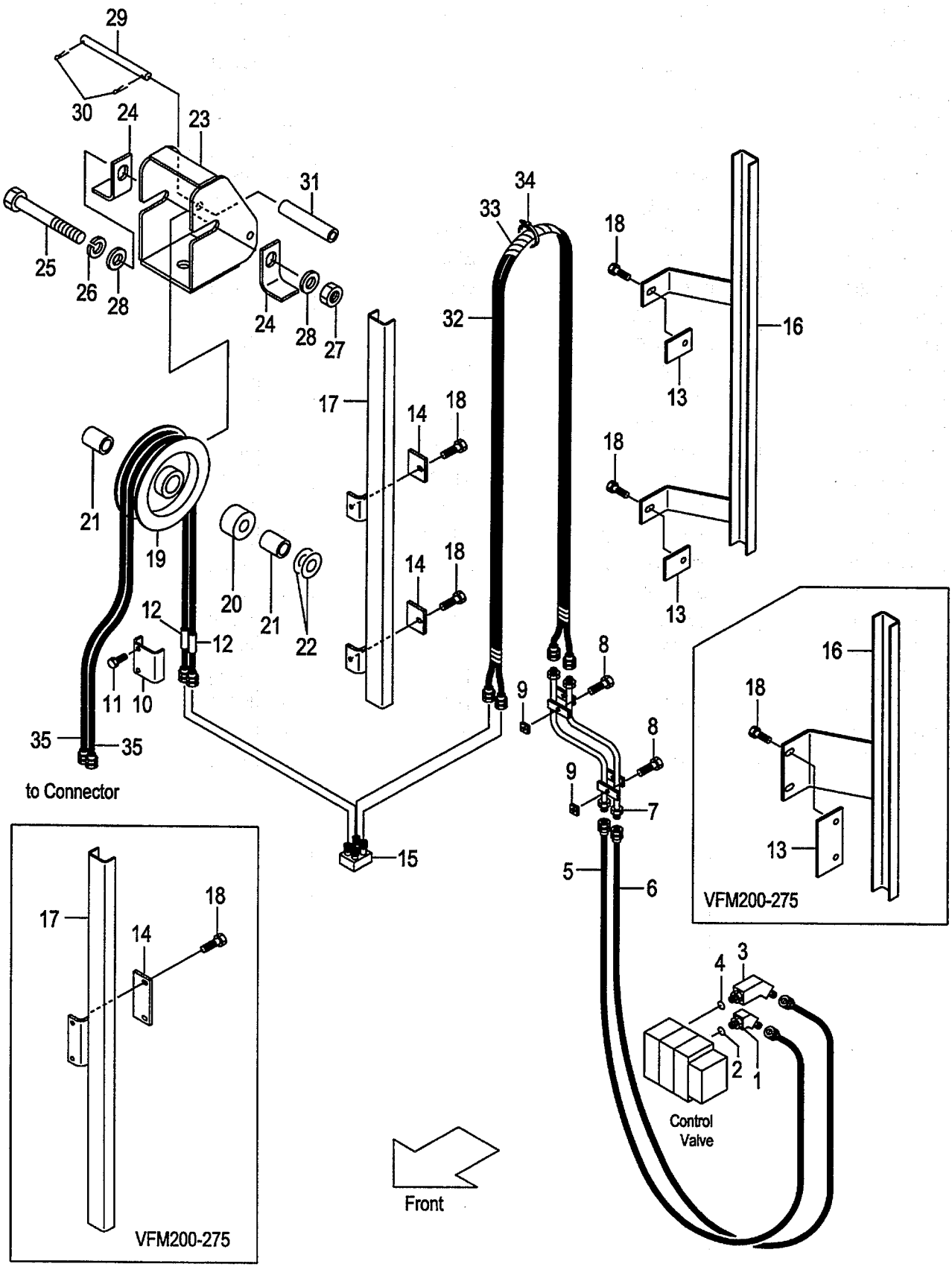

A:AP121F(VFM/J)

Item No	Part No.	Mark	Description		Req'd	Remarks : Serial No.
A1	NO PART NO.	#	ELBOW-ASSY	ｴﾙﾎﾞｱｯｾﾝ	1	INC.1,2
1	63130-12071		ELBOW	ｴﾙﾎﾞ	1	
2	03320-00140		O-RING	Oﾘﾝｸﾞ	1	
A2	NO PART NO.	#	ELBOW-ASSY	ｴﾙﾎﾞｱｯｾﾝ	1	INC.3,4
3	62160-10011		ELBOW	ｴﾙﾎﾞ	1	
4	03320-00140		O-RING	Oﾘﾝｸﾞ	1	
5	62160-12302		HOSE	ﾎｰｽ	1	
6	62160-12312		HOSE	ﾎｰｽ	1	
7	62170-12311		PIPE	ﾊﾟｲﾌﾟ	1	
8	01183-08016		BOLT	ﾎﾞﾙﾄ	2	
9	62150-12981		BLOCK,TAPPED	ﾌﾞﾛｯｸ	2	
10	62170-12601		BAND	ﾊﾞﾝﾄﾞ	1	
11	01183-08035		BOLT	ﾎﾞﾙﾄ	2	
12	61350-10021		RUBBER	ﾗﾊﾞｰ	2	
13	61150-12311		PLATE	ﾌﾟﾚｰﾄ	1	[VFM200-275]
-	61150-12321		PLATE	ﾌﾟﾚｰﾄ	2	[VFM300-600]
14	62170-12091		PLATE	ﾌﾟﾚｰﾄ	1	[VFM200-275]
-	62170-12081		PLATE	ﾌﾟﾚｰﾄ	2	[VFM300-600]
15	62170-12571		STUD	ｽﾀｯﾄﾞ	1	
16	62170-13001		GUIDE VFM200	ｶﾞｲﾄﾞ	1	
-	62170-13011		GUIDE VFM225	ｶﾞｲﾄﾞ	1	
-	62170-13021		GUIDE VFM250	ｶﾞｲﾄﾞ	1	
-	62170-13031		GUIDE VFM270	ｶﾞｲﾄﾞ	1	
-	62170-13041		GUIDE VFM275	ｶﾞｲﾄﾞ	1	
-	62170-12051		GUIDE VFM300	ｶﾞｲﾄﾞ	1	
-	62170-13051		GUIDE VFM325	ｶﾞｲﾄﾞ	1	
-	62170-13061		GUIDE VFM330	ｶﾞｲﾄﾞ	1	
-	62170-13071		GUIDE VFM350	ｶﾞｲﾄﾞ	1	
-	62170-13081		GUIDE VFM366	ｶﾞｲﾄﾞ	1	
-	62170-13091		GUIDE VFM370	ｶﾞｲﾄﾞ	1	
-	62170-13101		GUIDE VFM375	ｶﾞｲﾄﾞ	1	
-	62170-13111		GUIDE VFM400	ｶﾞｲﾄﾞ	1	
-	62170-13121		GUIDE VFM425	ｶﾞｲﾄﾞ	1	
-	62170-13131		GUIDE VFM450	ｶﾞｲﾄﾞ	1	
-	62170-13141		GUIDE VFM475	ｶﾞｲﾄﾞ	1	
-	62170-13151		GUIDE VFM500	ｶﾞｲﾄﾞ	1	
-	62170-13161		GUIDE VFM550	ｶﾞｲﾄﾞ	1	
-	62170-13171		GUIDE VFM600	ｶﾞｲﾄﾞ	1	
17	62170-13201		GUIDE VFM200	ｶﾞｲﾄﾞ	1	
-	62170-13211		GUIDE VFM225	ｶﾞｲﾄﾞ	1	
-	62170-13221		GUIDE VFM250	ｶﾞｲﾄﾞ	1	
-	62170-13231		GUIDE VFM270	ｶﾞｲﾄﾞ	1	
-	62170-13231		GUIDE VFM275	ｶﾞｲﾄﾞ	1	
-	62170-12001		GUIDE VFM300	ｶﾞｲﾄﾞ	1	
-	62170-13241		GUIDE VFM325	ｶﾞｲﾄﾞ	1	
-	62170-13241		GUIDE VFM330	ｶﾞｲﾄﾞ	1	
-	62170-13251		GUIDE VFM350	ｶﾞｲﾄﾞ	1	
-	62170-13261		GUIDE VFM366	ｶﾞｲﾄﾞ	1	
-	62170-13261		GUIDE VFM370	ｶﾞｲﾄﾞ	1	
-	62170-13261		GUIDE VFM375	ｶﾞｲﾄﾞ	1	

FIG.138 HYDRAULIC LINE (CONTROL VALVE-CONNECTOR)

(A502AP90) ﾊｲﾄﾞﾛﾘｯｸﾗｲﾝ (ｺﾝﾄﾛｰﾙﾊﾞﾙﾌﾞ-ｺﾈｸﾀ)

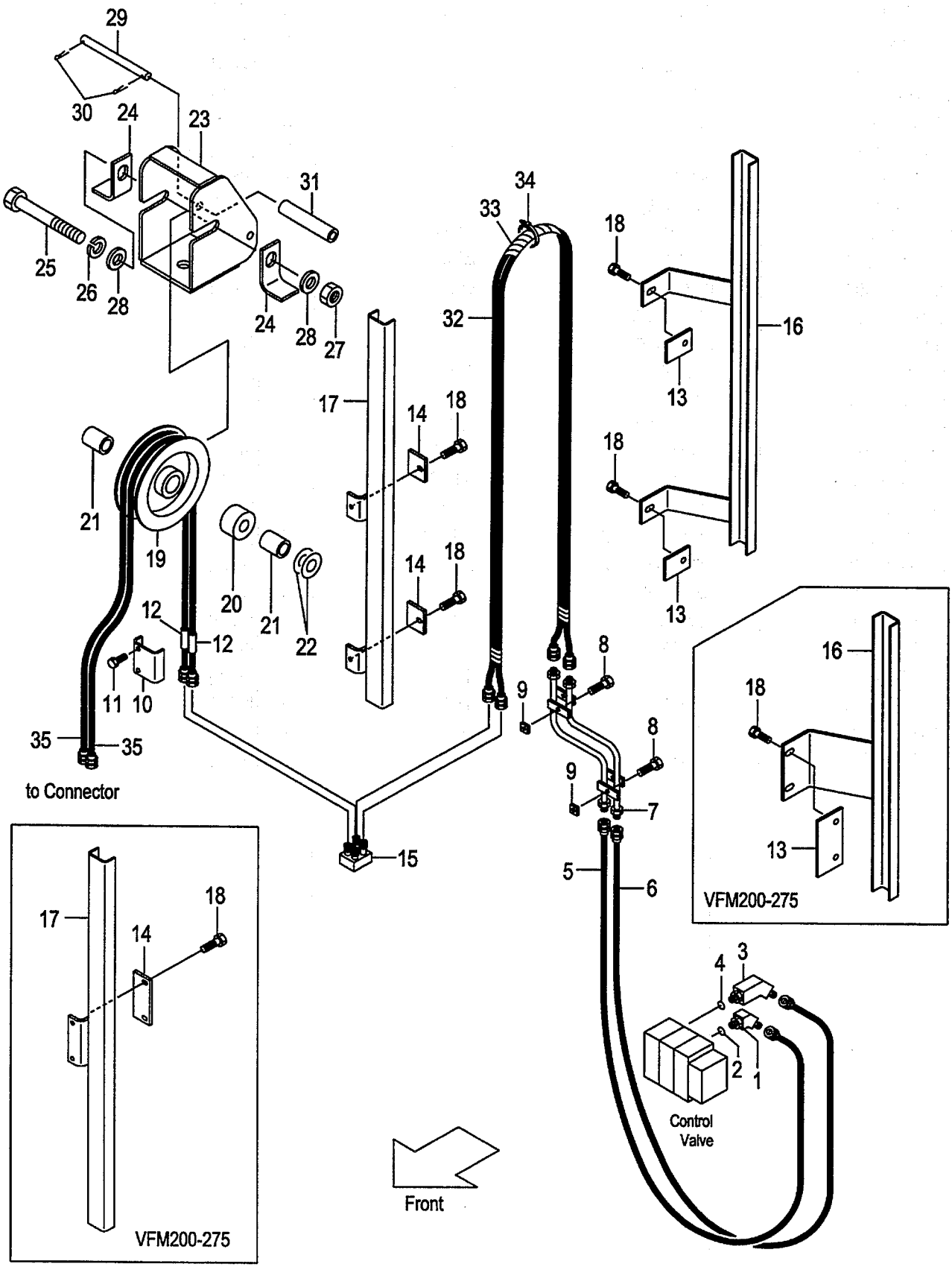

A:AP121F(VFM/J)

Item No	Part No.	Mark	Description		Req'd	Remarks : Serial No.
-	62170-13271		GUIDE VFM400	ｶﾞｲﾄﾞ	1	
-	62170-13281		GUIDE VFM425	ｶﾞｲﾄﾞ	1	
-	62170-13291		GUIDE VFM450	ｶﾞｲﾄﾞ	1	
-	62170-13301		GUIDE VFM475	ｶﾞｲﾄﾞ	1	
-	62170-13311		GUIDE VFM500	ｶﾞｲﾄﾞ	1	
-	62170-13321		GUIDE VFM550	ｶﾞｲﾄﾞ	1	
-	62170-13331		GUIDE VFM600	ｶﾞｲﾄﾞ	1	
18	01183-08016		BOLT	ﾎﾞﾙﾄ	4	
19	62170-12731		PULLEY	ﾌﾟｰﾘ	1	
20	62170-12671		SPACER	ｽﾍﾟｰｻ	1	
21	62170-12651		COLLAR	ｶﾗｰ	2	
22	23917-42191		SHIM	ｼﾑ	2	
23	62170-12501		BRACKET	ﾌﾞﾗｹｯﾄ	1	
24	62170-12551		STOPPER	ｽﾄｯﾊﾟ	2	
25	01100-16140		BOLT	ﾎﾞﾙﾄ	1	
26	02010-00016		WASHER	ﾜｯｼｬ	1	
27	01400-00016		NUT	ﾅｯﾄ	1	
28	02000-00016		WASHER	ﾜｯｼｬ	2	
29	62170-12701		PIN	ﾋﾟﾝ	1	
30	02200-32020		PIN	ﾋﾟﾝ	2	
31	62170-12711		COLLAR	ｶﾗｰ	1	
32	63300-31090		HOSE VFM200	ﾎｰｽ	1	
-	63300-31100		HOSE VFM225	ﾎｰｽ	1	
-	63300-31115		HOSE VFM250	ﾎｰｽ	1	
-	63300-31125		HOSE VFM270	ﾎｰｽ	1	
-	63300-31125		HOSE VFM275	ﾎｰｽ	1	
-	63300-31140		HOSE VFM300	ﾎｰｽ	1	
-	63300-31150		HOSE VFM325	ﾎｰｽ	1	
-	63300-31155		HOSE VFM330	ﾎｰｽ	1	
-	63300-31165		HOSE VFM350	ﾎｰｽ	1	
-	63300-31170		HOSE VFM366	ﾎｰｽ	1	
-	63300-31175		HOSE VFM370	ﾎｰｽ	1	
-	63300-31175		HOSE VFM375	ﾎｰｽ	1	
-	63300-31185		HOSE VFM400	ﾎｰｽ	1	
-	63300-31195		HOSE VFM425	ﾎｰｽ	1	
-	63300-31210		HOSE VFM450	ﾎｰｽ	1	
-	63300-31220		HOSE VFM475	ﾎｰｽ	1	
-	63300-31235		HOSE VFM500	ﾎｰｽ	1	
-	63300-31255		HOSE VFM550	ﾎｰｽ	1	
-	63300-31280		HOSE VFM600	ﾎｰｽ	1	
33	27730-62431		LAP,SPIRAL VFM200	ﾗｯﾌﾟ	1	
-	27730-62431		LAP,SPIRAL VFM225	ﾗｯﾌﾟ	1	
-	27730-62451		LAP,SPIRAL VFM250	ﾗｯﾌﾟ	1	
-	27730-62461		LAP,SPIRAL VFM270	ﾗｯﾌﾟ	1	
-	27730-62461		LAP,SPIRAL VFM275	ﾗｯﾌﾟ	1	
-	27730-62471		LAP,SPIRAL VFM300	ﾗｯﾌﾟ	1	
-	27730-62481		LAP,SPIRAL VFM325	ﾗｯﾌﾟ	1	
-	27730-62481		LAP,SPIRAL VFM330	ﾗｯﾌﾟ	1	
-	27730-62491		LAP,SPIRAL VFM350	ﾗｯﾌﾟ	1	
-	27730-62491		LAP,SPIRAL VFM366	ﾗｯﾌﾟ	1	

FIG.138 HYDRAULIC LINE (CONTROL VALVE-CONNECTOR)

(A502AP90) ﾊｲﾄﾞﾛﾘｯｸﾗｲﾝ (ｺﾝﾄﾛｰﾙﾊﾞﾙﾌﾞ-ｺﾈｸﾀ)

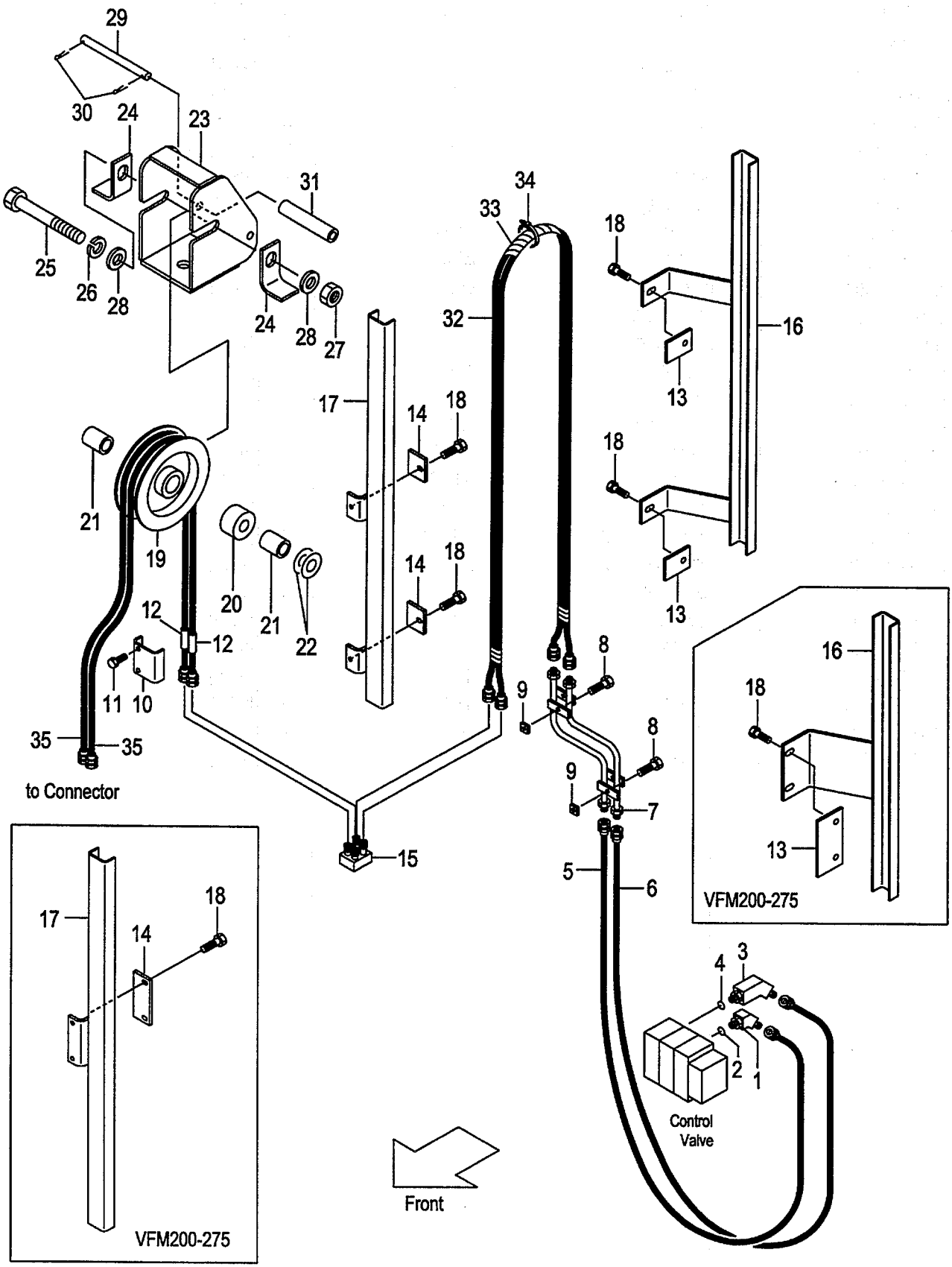

A:AP121F(VFM/J)

Item No	Part No.	Mark	Description		Req'd	Remarks : Serial No.
-	27730-62491		LAP,SPIRAL VFM370	ﾗｯﾌﾟ	1	
-	27730-62491		LAP,SPIRAL VFM375	ﾗｯﾌﾟ	1	
-	62140-12811		LAP,SPIRAL VFM400	ﾗｯﾌﾟ	1	
-	62140-12811		LAP,SPIRAL VFM425	ﾗｯﾌﾟ	1	
-	62140-12821		LAP,SPIRAL VFM450	ﾗｯﾌﾟ	1	
-	62140-12821		LAP,SPIRAL VFM475	ﾗｯﾌﾟ	1	
-	62140-12831		LAP,SPIRAL VFM500	ﾗｯﾌﾟ	1	
-	62140-12841		LAP,SPIRAL VFM550	ﾗｯﾌﾟ	1	
-	62140-12851		LAP,SPIRAL VFM600	ﾗｯﾌﾟ	1	
34	27132-40181		BAND	ﾊﾞﾝﾄﾞ	5	
35	04601-33170		HOSE VFM200	ﾎｰｽ	2	
-	04601-33185		HOSE VFM225	ﾎｰｽ	2	
-	04601-33195		HOSE VFM250	ﾎｰｽ	2	
-	04601-33205		HOSE VFM270	ﾎｰｽ	2	
-	04601-33210		HOSE VFM275	ﾎｰｽ	2	
-	04601-33220		HOSE VFM300	ﾎｰｽ	2	
-	04601-33235		HOSE VFM325	ﾎｰｽ	2	
-	04601-33235		HOSE VFM330	ﾎｰｽ	2	
-	04601-33245		HOSE VFM350	ﾎｰｽ	2	
-	04601-33255		HOSE VFM366	ﾎｰｽ	2	
-	04601-33255		HOSE VFM370	ﾎｰｽ	2	
-	04601-33260		HOSE VFM375	ﾎｰｽ	2	
-	04601-33265		HOSE VFM400	ﾎｰｽ	2	
-	04601-33280		HOSE VFM425	ﾎｰｽ	2	
-	04601-33290		HOSE VFM450	ﾎｰｽ	2	
-	04601-33305		HOSE VFM475	ﾎｰｽ	2	
-	04601-33315		HOSE VFM500	ﾎｰｽ	2	
-	04601-33335		HOSE VFM550	ﾎｰｽ	2	
-	04601-33360		HOSE VFM600	ﾎｰｽ	2	
36	62170-12611	+	PLATE	ﾌﾟﾚｰﾄ	1	
37	01183-08016	+	BOLT & WASHER	ﾎﾞﾙﾄ&ﾜｯｼｬ	2	

HYDRAULIC LINE
FIG.139 (CONT. VALVE-CONNECTOR)[AR4,ARD,4AP]

(A502APA0) ハイドロリックライン (コントロールバルブ-コネクタ)

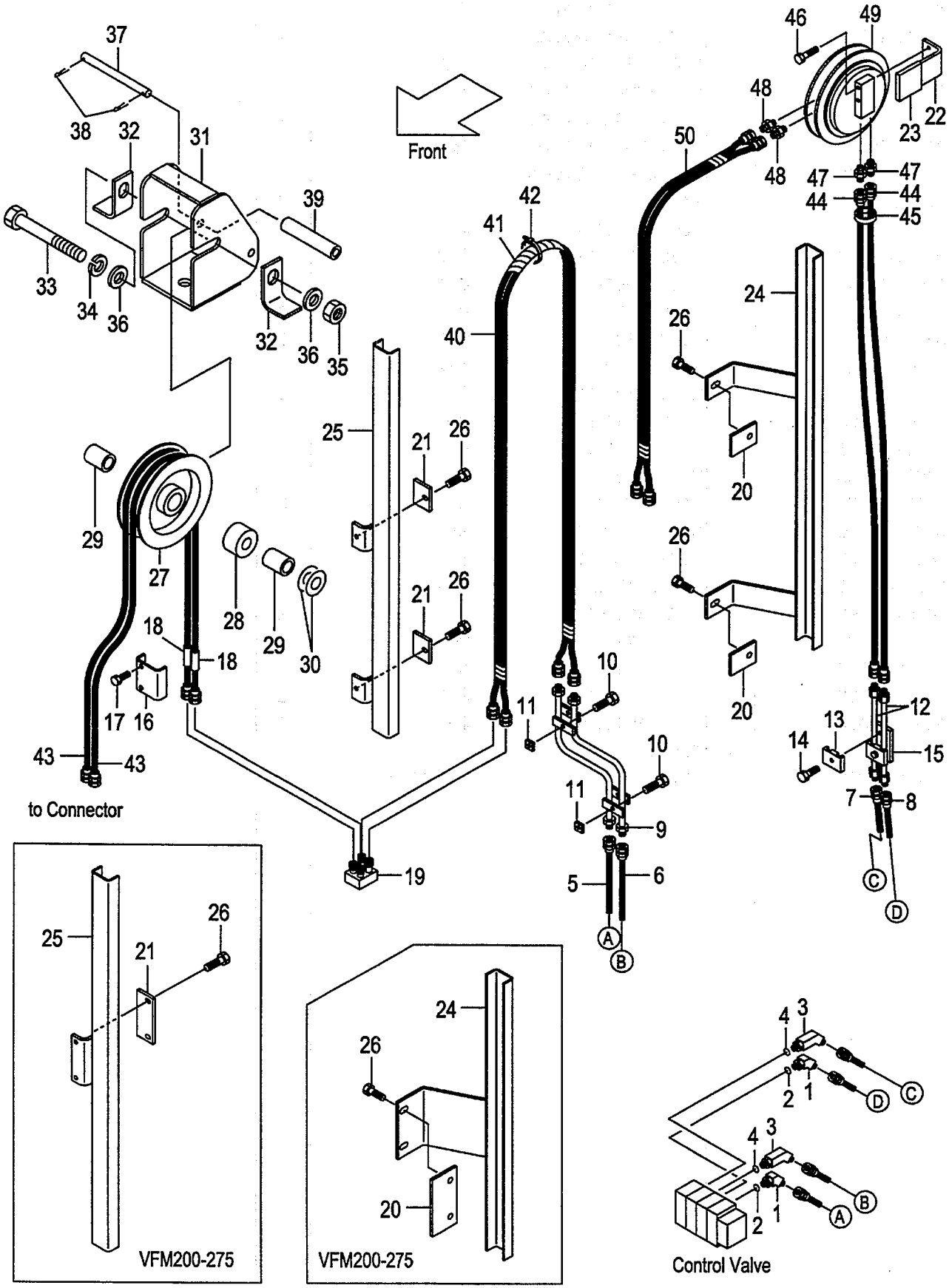

A:AP121F(VFM/J)

Item No	Part No.	Mark	Description		Req'd	Remarks : Serial No.
A1	NO PART NO.	#	ELBOW-ASSY	ｴﾙﾎﾞｱｯｾﾝ	2	[AR4][ARD][4AP] INC.1,2
1	63130-12071		ELBOW	ｴﾙﾎﾞ	2	[AR4][ARD][4AP]
2	03320-00140		O-RING	Oﾘﾝｸﾞ	2	[AR4][ARD][4AP]
A2	NO PART NO.	#	ELBOW-ASSY	ｴﾙﾎﾞｱｯｾﾝ	2	[AR4][ARD][4AP] INC.3,4
3	62160-10011		ELBOW	ｴﾙﾎﾞ	2	[AR4][ARD][4AP]
4	03320-00140		O-RING	Oﾘﾝｸﾞ	2	[AR4][ARD][4AP]
5	62160-12302		HOSE	ﾎｰｽ	1	[AR4][ARD][4AP]
6	62160-12312		HOSE	ﾎｰｽ	1	[AR4][ARD][4AP]
7	62150-12612		HOSE	ﾎｰｽ	1	[AR4][ARD][4AP]
8	62150-12512		HOSE	ﾎｰｽ	1	[AR4][ARD][4AP]
9	62170-12311		PIPE	ﾊﾟｲﾌﾟ	1	[AR4][ARD][4AP]
10	01183-08016		BOLT	ﾎﾞﾙﾄ	2	[AR4][ARD][4AP]
11	62150-12981		BLOCK,TAPPED	ﾌﾞﾛｯｸ	2	[AR4][ARD][4AP]
12	62160-12401		PIPE	ﾊﾟｲﾌﾟ	2	[AR4][ARD][4AP]
13	63810-12081		BAND	ﾊﾞﾝﾄﾞ	2	[AR4][ARD][4AP]
14	01184-10035		BOLT	ﾎﾞﾙﾄ	2	[AR4][ARD][4AP]
15	63680-12401		BRACKET	ﾌﾞﾗｹｯﾄ	1	[AR4][ARD][4AP]
16	62170-12601		BAND	ﾊﾞﾝﾄﾞ	1	[AR4][ARD][4AP]
17	01183-08035		BOLT	ﾎﾞﾙﾄ	2	[AR4][ARD][4AP]
18	61350-10021		RUBBER	ﾗﾊﾞｰ	2	[AR4][ARD][4AP]
19	62170-12571		STUD	ｽﾀｯﾄﾞ	1	[AR4][ARD][4AP]
20	61150-12311		PLATE	ﾌﾟﾚｰﾄ	1	[(AR4,ARD,4AP)/VFM200-275]
-	61150-12321		PLATE	ﾌﾟﾚｰﾄ	2	[(AR4,ARD,4AP)/VFM300-600]
21	62170-12091		PLATE	ﾌﾟﾚｰﾄ	1	[(AR4,ARD,4AP)/VFM200-275]
-	62170-12081		PLATE	ﾌﾟﾚｰﾄ	2	[(AR4,ARD,4AP)/VFM300-600]
22	62170-12901		BRACKET	ﾌﾞﾗｹｯﾄ	1	[AR4][ARD][4AP]
23	61163-32012		PLATE	ﾌﾟﾚｰﾄ	1	[AR4][ARD][4AP]
24	62170-13001		GUIDE VFM200	ｶﾞｲﾄﾞ	1	[AR4][ARD][4AP]
-	62170-13011		GUIDE VFM225	ｶﾞｲﾄﾞ	1	[AR4][ARD][4AP]
-	62170-13021		GUIDE VFM250	ｶﾞｲﾄﾞ	1	[AR4][ARD][4AP]
-	62170-13031		GUIDE VFM270	ｶﾞｲﾄﾞ	1	[AR4][ARD][4AP]
-	62170-13041		GUIDE VFM275	ｶﾞｲﾄﾞ	1	[AR4][ARD][4AP]
-	62170-12051		GUIDE VFM300	ｶﾞｲﾄﾞ	1	[AR4][ARD][4AP]
-	62170-13051		GUIDE VFM325	ｶﾞｲﾄﾞ	1	[AR4][ARD][4AP]
-	62170-13061		GUIDE VFM330	ｶﾞｲﾄﾞ	1	[AR4][ARD][4AP]
-	62170-13071		GUIDE VFM350	ｶﾞｲﾄﾞ	1	[AR4][ARD][4AP]
-	62170-13081		GUIDE VFM366	ｶﾞｲﾄﾞ	1	[AR4][ARD][4AP]
-	62170-13091		GUIDE VFM370	ｶﾞｲﾄﾞ	1	[AR4][ARD][4AP]
-	62170-13101		GUIDE VFM375	ｶﾞｲﾄﾞ	1	[AR4][ARD][4AP]
-	62170-13111		GUIDE VFM400	ｶﾞｲﾄﾞ	1	[AR4][ARD][4AP]
-	62170-13121		GUIDE VFM425	ｶﾞｲﾄﾞ	1	[AR4][ARD][4AP]
-	62170-13131		GUIDE VFM450	ｶﾞｲﾄﾞ	1	[AR4][ARD][4AP]
-	62170-13141		GUIDE VFM475	ｶﾞｲﾄﾞ	1	[AR4][ARD][4AP]
-	62170-13151		GUIDE VFM500	ｶﾞｲﾄﾞ	1	[AR4][ARD][4AP]
-	62170-13161		GUIDE VFM550	ｶﾞｲﾄﾞ	1	[AR4][ARD][4AP]
-	62170-13171		GUIDE VFM600	ｶﾞｲﾄﾞ	1	[AR4][ARD][4AP]
25	62170-13201		GUIDE VFM200	ｶﾞｲﾄﾞ	1	[AR4][ARD][4AP]
-	62170-13211		GUIDE VFM225	ｶﾞｲﾄﾞ	1	[AR4][ARD][4AP]
-	62170-13221		GUIDE VFM250	ｶﾞｲﾄﾞ	1	[AR4][ARD][4AP]
-	62170-13231		GUIDE VFM270	ｶﾞｲﾄﾞ	1	[AR4][ARD][4AP]

HYDRAULIC LINE
FIG.139 (CONT. VALVE-CONNECTOR)[AR4,ARD,4AP]

(A502APA0) ハイドロリックライン (コントロールバルブ-コネクタ)

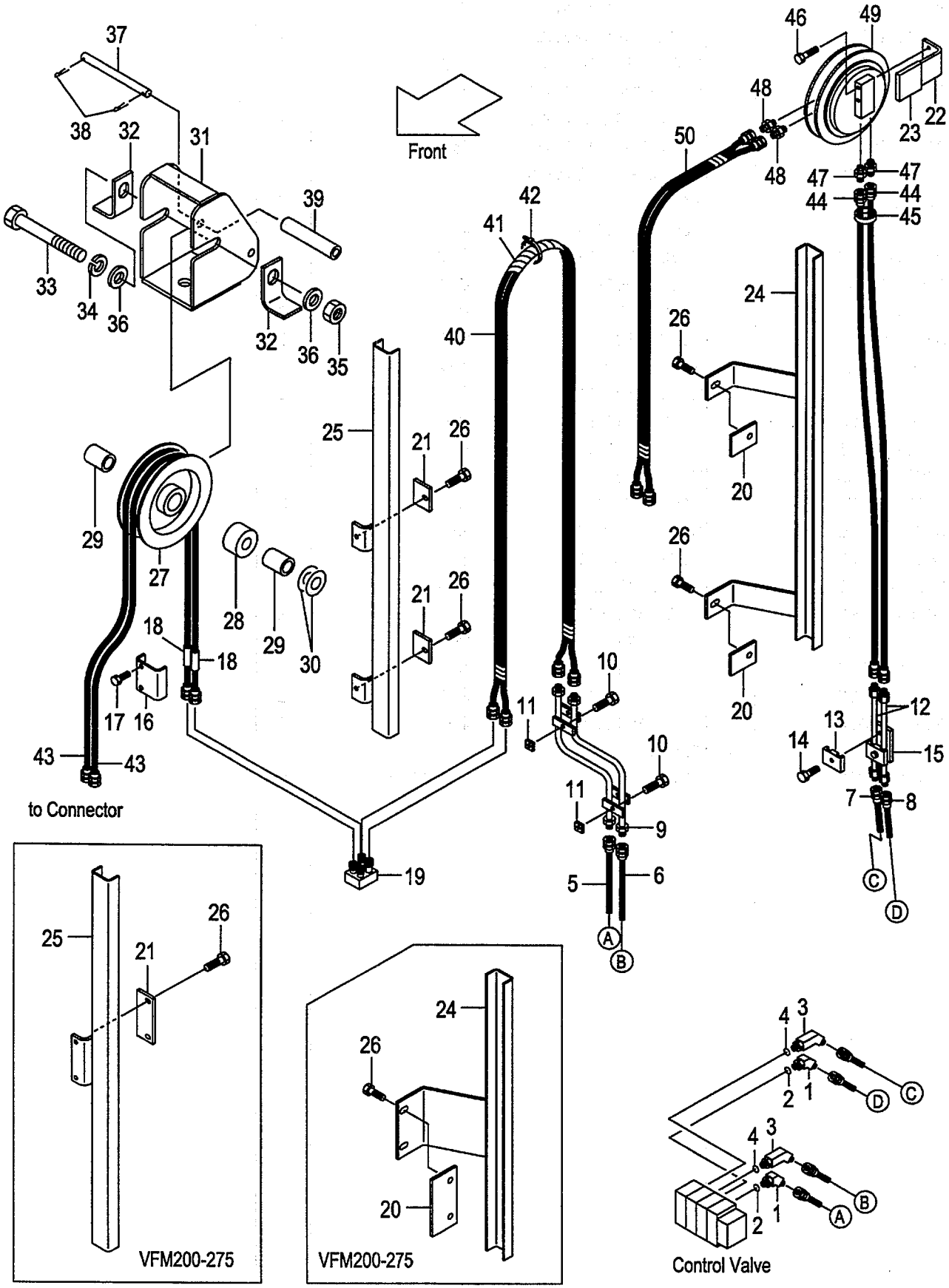

A:AP121F(VFM/J)

Item No	Part No.	Mark	Description		Req'd	Remarks : Serial No.
-	62170-13231		GUIDE VFM275	ｶﾞｲﾄﾞ	1	[AR4][ARD][4AP]
-	62170-12001		GUIDE VFM300	ｶﾞｲﾄﾞ	1	[AR4][ARD][4AP]
-	62170-13241		GUIDE VFM325	ｶﾞｲﾄﾞ	1	[AR4][ARD][4AP]
-	62170-13241		GUIDE VFM330	ｶﾞｲﾄﾞ	1	[AR4][ARD][4AP]
-	62170-13251		GUIDE VFM350	ｶﾞｲﾄﾞ	1	[AR4][ARD][4AP]
-	62170-13261		GUIDE VFM366	ｶﾞｲﾄﾞ	1	[AR4][ARD][4AP]
-	62170-13261		GUIDE VFM370	ｶﾞｲﾄﾞ	1	[AR4][ARD][4AP]
-	62170-13261		GUIDE VFM375	ｶﾞｲﾄﾞ	1	[AR4][ARD][4AP]
-	62170-13271		GUIDE VFM400	ｶﾞｲﾄﾞ	1	[AR4][ARD][4AP]
-	62170-13281		GUIDE VFM425	ｶﾞｲﾄﾞ	1	[AR4][ARD][4AP]
-	62170-13291		GUIDE VFM450	ｶﾞｲﾄﾞ	1	[AR4][ARD][4AP]
-	62170-13301		GUIDE VFM475	ｶﾞｲﾄﾞ	1	[AR4][ARD][4AP]
-	62170-13311		GUIDE VFM500	ｶﾞｲﾄﾞ	1	[AR4][ARD][4AP]
-	62170-13321		GUIDE VFM550	ｶﾞｲﾄﾞ	1	[AR4][ARD][4AP]
-	62170-13331		GUIDE VFM600	ｶﾞｲﾄﾞ	1	[AR4][ARD][4AP]
26	01183-08016		BOLT	ﾎﾞﾙﾄ	4	[AR4][ARD][4AP]
27	62170-12731		PULLEY	ﾌﾟｰﾘ	1	[AR4][ARD][4AP]
28	62170-12671		SPACER	ｽﾍﾟｰｻ	1	[AR4][ARD][4AP]
29	62170-12651		COLLAR	ｶﾗｰ	2	[AR4][ARD][4AP]
30	23917-42191		SHIM	ｼﾑ	2	[AR4][ARD][4AP]
31	62170-12501		BRACKET	ﾌﾞﾗｹｯﾄ	1	[AR4][ARD][4AP]
32	62170-12551		STOPPER	ｽﾄｯﾊﾟ	2	[AR4][ARD][4AP]
33	01100-16140		BOLT	ﾎﾞﾙﾄ	1	[AR4][ARD][4AP]
34	02010-00016		WASHER	ﾜｯｼｬ	1	[AR4][ARD][4AP]
35	01400-00016		NUT	ﾅｯﾄ	1	[AR4][ARD][4AP]
36	02000-00016		WASHER	ﾜｯｼｬ	2	[AR4][ARD][4AP]
37	62170-12701		PIN	ﾋﾟﾝ	1	[AR4][ARD][4AP]
38	02200-32020		PIN	ﾋﾟﾝ	2	[AR4][ARD][4AP]
39	62170-12711		COLLAR	ｶﾗｰ	1	[AR4][ARD][4AP]
40	63300-31090		HOSE VFM200	ﾎｰｽ	1	[AR4][ARD][4AP]
-	63300-31100		HOSE VFM225	ﾎｰｽ	1	[AR4][ARD][4AP]
-	63300-31115		HOSE VFM250	ﾎｰｽ	1	[AR4][ARD][4AP]
-	63300-31125		HOSE VFM270	ﾎｰｽ	1	[AR4][ARD][4AP]
-	63300-31125		HOSE VFM275	ﾎｰｽ	1	[AR4][ARD][4AP]
-	63300-31140		HOSE VFM300	ﾎｰｽ	1	[AR4][ARD][4AP]
-	63300-31150		HOSE VFM325	ﾎｰｽ	1	[AR4][ARD][4AP]
-	63300-31155		HOSE VFM330	ﾎｰｽ	1	[AR4][ARD][4AP]
-	63300-31165		HOSE VFM350	ﾎｰｽ	1	[AR4][ARD][4AP]
-	63300-31170		HOSE VFM366	ﾎｰｽ	1	[AR4][ARD][4AP]
-	63300-31175		HOSE VFM370	ﾎｰｽ	1	[AR4][ARD][4AP]
-	63300-31175		HOSE VFM375	ﾎｰｽ	1	[AR4][ARD][4AP]
-	63300-31185		HOSE VFM400	ﾎｰｽ	1	[AR4][ARD][4AP]
-	63300-31195		HOSE VFM425	ﾎｰｽ	1	[AR4][ARD][4AP]
-	63300-31210		HOSE VFM450	ﾎｰｽ	1	[AR4][ARD][4AP]
-	63300-31220		HOSE VFM475	ﾎｰｽ	1	[AR4][ARD][4AP]
-	63300-31235		HOSE VFM500	ﾎｰｽ	1	[AR4][ARD][4AP]
-	63300-21255		HOSE VFM550	ﾎｰｽ	1	[AR4][ARD][4AP]
-	63300-31280		HOSE VFM600	ﾎｰｽ	1	[AR4][ARD][4AP]
41	27730-62431		LAP,SPIRAL VFM200	ﾗｯﾌﾟ	1	[AR4][ARD][4AP]
-	27730-62431		LAP,SPIRAL VFM225	ﾗｯﾌﾟ	1	[AR4][ARD][4AP]

HYDRAULIC LINE
FIG.139 (CONT. VALVE-CONNECTOR)[AR4,ARD,4AP]

(A502APA0) ハイドロリックライン (コントロールバルブ-コネクタ)

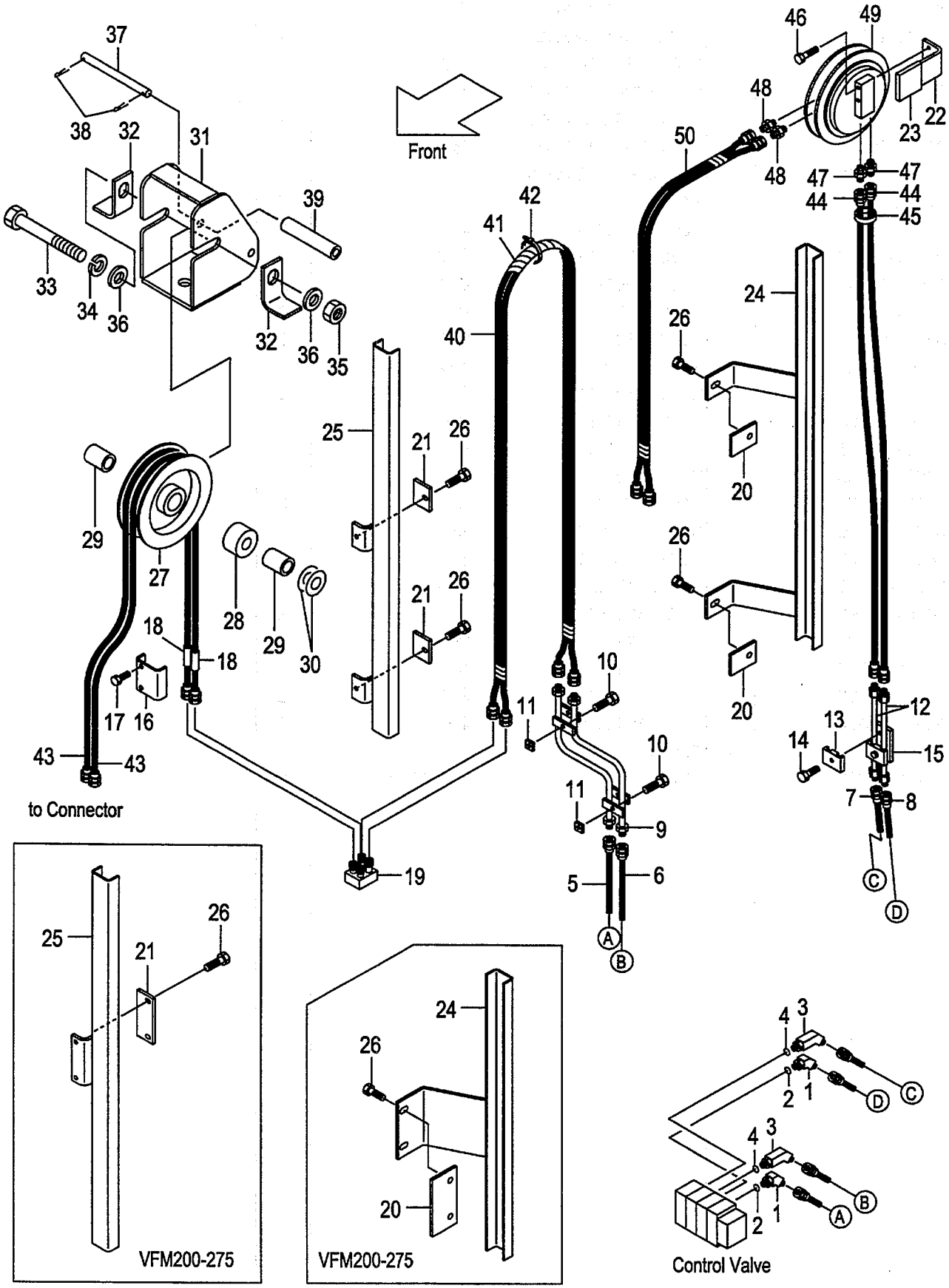

A:AP121F(VFM/J)

Item No	Part No.	Mark	Description		Req'd	Remarks : Serial No.
-	27730-62451		LAP,SPIRAL VFM250	ﾗｯﾌﾟ	1	[AR4][ARD][4AP]
-	27730-62461		LAP,SPIRAL VFM270	ﾗｯﾌﾟ	1	[AR4][ARD][4AP]
-	27730-62461		LAP,SPIRAL VFM275	ﾗｯﾌﾟ	1	[AR4][ARD][4AP]
-	27730-62471		LAP,SPIRAL VFM300	ﾗｯﾌﾟ	1	[AR4][ARD][4AP]
-	27730-62481		LAP,SPIRAL VFM325	ﾗｯﾌﾟ	1	[AR4][ARD][4AP]
-	27730-62481		LAP,SPIRAL VFM330	ﾗｯﾌﾟ	1	[AR4][ARD][4AP]
-	27730-62491		LAP,SPIRAL VFM350	ﾗｯﾌﾟ	1	[AR4][ARD][4AP]
-	27730-62491		LAP,SPIRAL VFM366	ﾗｯﾌﾟ	1	[AR4][ARD][4AP]
-	27730-62491		LAP,SPIRAL VFM370	ﾗｯﾌﾟ	1	[AR4][ARD][4AP]
-	27730-62491		LAP,SPIRAL VFM375	ﾗｯﾌﾟ	1	[AR4][ARD][4AP]
-	62140-12811		LAP,SPIRAL VFM400	ﾗｯﾌﾟ	1	[AR4][ARD][4AP]
-	62140-12811		LAP,SPIRAL VFM425	ﾗｯﾌﾟ	1	[AR4][ARD][4AP]
-	62140-12821		LAP,SPIRAL VFM450	ﾗｯﾌﾟ	1	[AR4][ARD][4AP]
-	62140-12821		LAP,SPIRAL VFM475	ﾗｯﾌﾟ	1	[AR4][ARD][4AP]
-	62140-12831		LAP,SPIRAL VFM500	ﾗｯﾌﾟ	1	[AR4][ARD][4AP]
-	62140-12841		LAP,SPIRAL VFM550	ﾗｯﾌﾟ	1	[AR4][ARD][4AP]
-	62140-12851		LAP,SPIRAL VFM600	ﾗｯﾌﾟ	1	[AR4][ARD][4AP]
42	27132-40181		BAND	ﾊﾞﾝﾄﾞ	5	[AR4][ARD][4AP]
43	04601-33170		HOSE VFM200	ﾎｰｽ	2	[AR4][ARD][4AP]
-	04601-33185		HOSE VFM225	ﾎｰｽ	2	[AR4][ARD][4AP]
-	04601-33195		HOSE VFM250	ﾎｰｽ	2	[AR4][ARD][4AP]
-	04601-33205		HOSE VFM270	ﾎｰｽ	2	[AR4][ARD][4AP]
-	04601-33210		HOSE VFM275	ﾎｰｽ	2	[AR4][ARD][4AP]
-	04601-33220		HOSE VFM300	ﾎｰｽ	2	[AR4][ARD][4AP]
-	04601-33235		HOSE VFM325	ﾎｰｽ	2	[AR4][ARD][4AP]
-	04601-33235		HOSE VFM330	ﾎｰｽ	2	[AR4][ARD][4AP]
-	04601-33245		HOSE VFM350	ﾎｰｽ	2	[AR4][ARD][4AP]
-	04601-33255		HOSE VFM366	ﾎｰｽ	2	[AR4][ARD][4AP]
-	04601-33255		HOSE VFM370	ﾎｰｽ	2	[AR4][ARD][4AP]
-	04601-33260		HOSE VFM375	ﾎｰｽ	2	[AR4][ARD][4AP]
-	04601-33265		HOSE VFM400	ﾎｰｽ	2	[AR4][ARD][4AP]
-	04601-33280		HOSE VFM425	ﾎｰｽ	2	[AR4][ARD][4AP]
-	04601-33290		HOSE VFM450	ﾎｰｽ	2	[AR4][ARD][4AP]
-	04601-33305		HOSE VFM475	ﾎｰｽ	2	[AR4][ARD][4AP]
-	04601-33315		HOSE VFM500	ﾎｰｽ	2	[AR4][ARD][4AP]
-	04601-33335		HOSE VFM550	ﾎｰｽ	2	[AR4][ARD][4AP]
-	04601-33360		HOSE VFM600	ﾎｰｽ	2	[AR4][ARD][4AP]
44	63130-21065		HOSE VFM200	ﾎｰｽ	2	[AR4][ARD][4AP]
-	63130-21075		HOSE VFM225	ﾎｰｽ	2	[AR4][ARD][4AP]
-	63130-21090		HOSE VFM250	ﾎｰｽ	2	[AR4][ARD][4AP]
-	63130-21100		HOSE VFM270	ﾎｰｽ	2	[AR4][ARD][4AP]
-	63130-21100		HOSE VFM275	ﾎｰｽ	2	[AR4][ARD][4AP]
-	63130-21115		HOSE VFM300	ﾎｰｽ	2	[AR4][ARD][4AP]
-	63130-21125		HOSE VFM325	ﾎｰｽ	2	[AR4][ARD][4AP]
-	63130-21130		HOSE VFM330	ﾎｰｽ	2	[AR4][ARD][4AP]
-	63130-21140		HOSE VFM350	ﾎｰｽ	2	[AR4][ARD][4AP]
-	63130-21145		HOSE VFM366	ﾎｰｽ	2	[AR4][ARD][4AP]
-	63130-21145		HOSE VFM370	ﾎｰｽ	2	[AR4][ARD][4AP]
-	63130-21150		HOSE VFM375	ﾎｰｽ	2	[AR4][ARD][4AP]
-	63130-21160		HOSE VFM400	ﾎｰｽ	2	[AR4][ARD][4AP]

HYDRAULIC LINE
FIG.139 (CONT. VALVE-CONNECTOR)[AR4,ARD,4AP]

(A502APA0) ハイドロリックライン (コントロールバルブ-コネクタ)

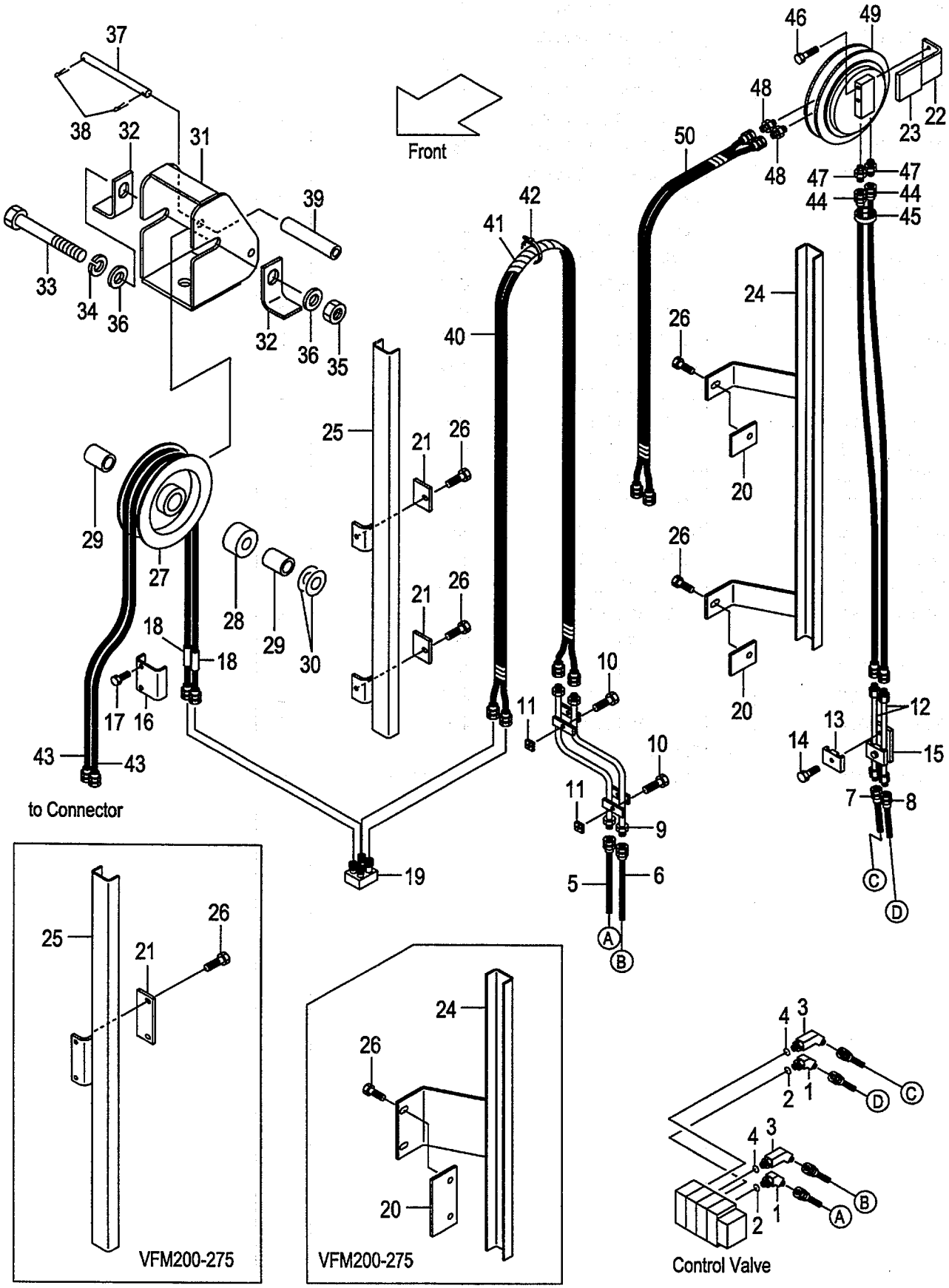

A:AP121F(VFM/J)

Item No	Part No.	Mark	Description		Req'd	Remarks : Serial No.
-	63130-21170		HOSE VFM425	ホース	2	[AR4][ARD][4AP]
-	63130-21185		HOSE VFM450	ホース	2	[AR4][ARD][4AP]
-	63130-21195		HOSE VFM475	ホース	2	[AR4][ARD][4AP]
-	63130-21210		HOSE VFM500	ホース	2	[AR4][ARD][4AP]
-	63130-21230		HOSE VFM550	ホース	2	[AR4][ARD][4AP]
-	63130-21280		HOSE VFM600	ホース	2	[AR4][ARD][4AP]
45	27262-42091		BAND	ﾊﾞﾝﾄﾞ	2	[AR4][ARD][4AP]
46	01184-12065		BOLT	ﾎﾞﾙﾄ	2	[AR4][ARD][4AP]
47	97050-01971		FITTING	ﾌｨｯﾃｨﾝｸﾞ	2	[AR4][ARD][4AP]
48	97060-45111		FITTING	ﾌｨｯﾃｨﾝｸﾞ	2	[AR4][ARD][4AP]
49	61170-23001		REEL,HOSE	ﾘｰﾙ	1	[AR4][ARD][4AP]
50	63130-12621		HOSE	ホース	1	[(AR4,ARD,4AP)/VFM200-475]
-	63130-12601		HOSE	ホース	1	[(AR4,ARD,4AP)/VFM500-600]
51	62170-12611	+	PLATE	ﾌﾟﾚｰﾄ	1	[AR4][ARD][4AP]
52	01183-08016	+	BOLT & WASHER	ﾎﾞﾙﾄ&ﾜｯｼｬ	2	[AR4][ARD][4AP]
K1	BS-51502-08610		KIT,SEAL,REEL	ﾘｰﾙｼｰﾙｷｯﾄ	1	

HYDRAULIC LINE
FIG.140 (CONT. VALVE-CONNECTOR)[AR5,5AP,ARE]
(A502APB0) ハイドロリックライン (コントロールバルブ-コネクタ)

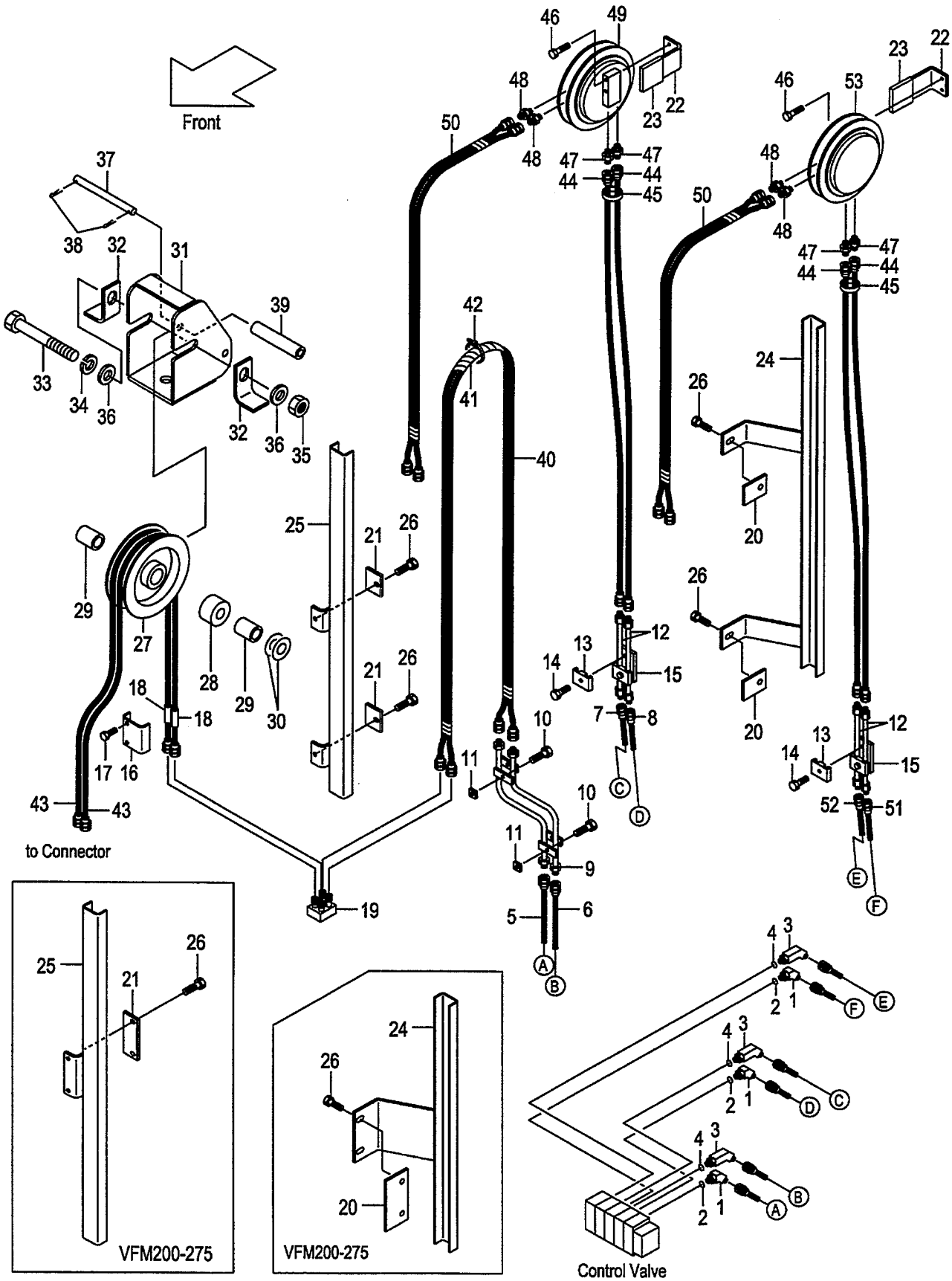

A:AP121F(VFM/J)

Item No	Part No.	Mark	Description		Req'd	Remarks : Serial No.
A1	NO PART NO.	#	ELBOW-ASSY	ｴﾙﾎﾞｱｯｾﾝ	2	[AR5][5AP][ARE] INC.1,2
1	63130-12071		ELBOW	ｴﾙﾎﾞ	2	[AR5][5AP][ARE]
2	03320-00140		O-RING	Oﾘﾝｸﾞ	2	[AR5][5AP][ARE]
A2	NO PART NO.	#	ELBOW-ASSY	ｴﾙﾎﾞｱｯｾﾝ	2	[AR5][5AP][ARE] INC.3,4
3	62160-10011		ELBOW	ｴﾙﾎﾞ	2	[AR5][5AP][ARE]
4	03320-00140		O-RING	Oﾘﾝｸﾞ	2	[AR5][5AP][ARE]
5	62160-12302		HOSE	ﾎｰｽ	1	[AR5][5AP][ARE]
6	62160-12312		HOSE	ﾎｰｽ	1	[AR5][5AP][ARE]
7	62150-12612		HOSE	ﾎｰｽ	1	[AR5][5AP][ARE]
8	62150-12512		HOSE	ﾎｰｽ	1	[AR5][5AP][ARE]
9	62170-12311		PIPE	ﾊﾟｲﾌﾟ	1	[AR5][5AP][ARE]
10	01183-08016		BOLT	ﾎﾞﾙﾄ	2	[AR5][5AP][ARE]
11	62150-12981		BLOCK,TAPPED	ﾌﾞﾛｯｸ	2	[AR5][5AP][ARE]
12	62160-12401		PIPE	ﾊﾟｲﾌﾟ	4	[AR5][5AP][ARE]
13	63810-12081		BAND	ﾊﾞﾝﾄﾞ	4	[AR5][5AP][ARE]
14	01184-10035		BOLT	ﾎﾞﾙﾄ	4	[AR5][5AP][ARE]
15	63680-12401		BRACKET	ﾌﾞﾗｹｯﾄ	2	[AR5][5AP][ARE]
16	62170-12601		BAND	ﾊﾞﾝﾄﾞ	1	[AR5][5AP][ARE]
17	01183-08035		BOLT	ﾎﾞﾙﾄ	2	[AR5][5AP][ARE]
18	61350-10021		RUBBER	ﾗﾊﾞｰ	2	[AR5][5AP][ARE]
19	62170-12571		STUD	ｽﾀｯﾄﾞ	1	[AR5][5AP][ARE]
20	61150-12311		PLATE	ﾌﾟﾚｰﾄ	1	[(AR5,5AP,ARE)/VFM200-275]
-	61150-12321		PLATE	ﾌﾟﾚｰﾄ	2	[(AR5,5AP,ARE)/VFM300-600]
21	62170-12091		PLATE	ﾌﾟﾚｰﾄ	1	[(AR5,5AP,ARE)/VFM200-275]
-	62170-12081		PLATE	ﾌﾟﾚｰﾄ	2	[(AR5,5AP,ARE)/VFM300-600]
22	62170-12901		BRACKET	ﾌﾞﾗｹｯﾄ	2	[AR5][5AP][ARE]
23	61163-32012		PLATE	ﾌﾟﾚｰﾄ	2	[AR5][5AP][ARE]
24	62170-13001		GUIDE VFM200	ｶﾞｲﾄﾞ	1	[AR5][5AP][ARE]
-	62170-13011		GUIDE VFM225	ｶﾞｲﾄﾞ	1	[AR5][5AP][ARE]
-	62170-13021		GUIDE VFM250	ｶﾞｲﾄﾞ	1	[AR5][5AP][ARE]
-	62170-13031		GUIDE VFM270	ｶﾞｲﾄﾞ	1	[AR5][5AP][ARE]
-	62170-13041		GUIDE VFM275	ｶﾞｲﾄﾞ	1	[AR5][5AP][ARE]
-	62170-12051		GUIDE VFM300	ｶﾞｲﾄﾞ	1	[AR5][5AP][ARE]
-	62170-13051		GUIDE VFM325	ｶﾞｲﾄﾞ	1	[AR5][5AP][ARE]
-	62170-13061		GUIDE VFM330	ｶﾞｲﾄﾞ	1	[AR5][5AP][ARE]
-	62170-13071		GUIDE VFM350	ｶﾞｲﾄﾞ	1	[AR5][5AP][ARE]
-	62170-13081		GUIDE VFM366	ｶﾞｲﾄﾞ	1	[AR5][5AP][ARE]
-	62170-13091		GUIDE VFM370	ｶﾞｲﾄﾞ	1	[AR5][5AP][ARE]
-	62170-13101		GUIDE VFM375	ｶﾞｲﾄﾞ	1	[AR5][5AP][ARE]
-	62170-13111		GUIDE VFM400	ｶﾞｲﾄﾞ	1	[AR5][5AP][ARE]
-	62170-13121		GUIDE VFM425	ｶﾞｲﾄﾞ	1	[AR5][5AP][ARE]
-	62170-13131		GUIDE VFM450	ｶﾞｲﾄﾞ	1	[AR5][5AP][ARE]
-	62170-13141		GUIDE VFM475	ｶﾞｲﾄﾞ	1	[AR5][5AP][ARE]
-	62170-13151		GUIDE VFM500	ｶﾞｲﾄﾞ	1	[AR5][5AP][ARE]
-	62170-13161		GUIDE VFM550	ｶﾞｲﾄﾞ	1	[AR5][5AP][ARE]
-	62170-13171		GUIDE VFM600	ｶﾞｲﾄﾞ	1	[AR5][5AP][ARE]
25	62170-13201		GUIDE VFM200	ｶﾞｲﾄﾞ	1	[AR5][5AP][ARE]
-	62170-13211		GUIDE VFM225	ｶﾞｲﾄﾞ	1	[AR5][5AP][ARE]
-	62170-13221		GUIDE VFM250	ｶﾞｲﾄﾞ	1	[AR5][5AP][ARE]
-	62170-13231		GUIDE VFM270	ｶﾞｲﾄﾞ	1	[AR5][5AP][ARE]

HYDRAULIC LINE
FIG.140 (CONT. VALVE-CONNECTOR)[AR5,5AP,ARE]
(A502APB0) ハイドロリックライン (コントロールバルブ-コネクタ)

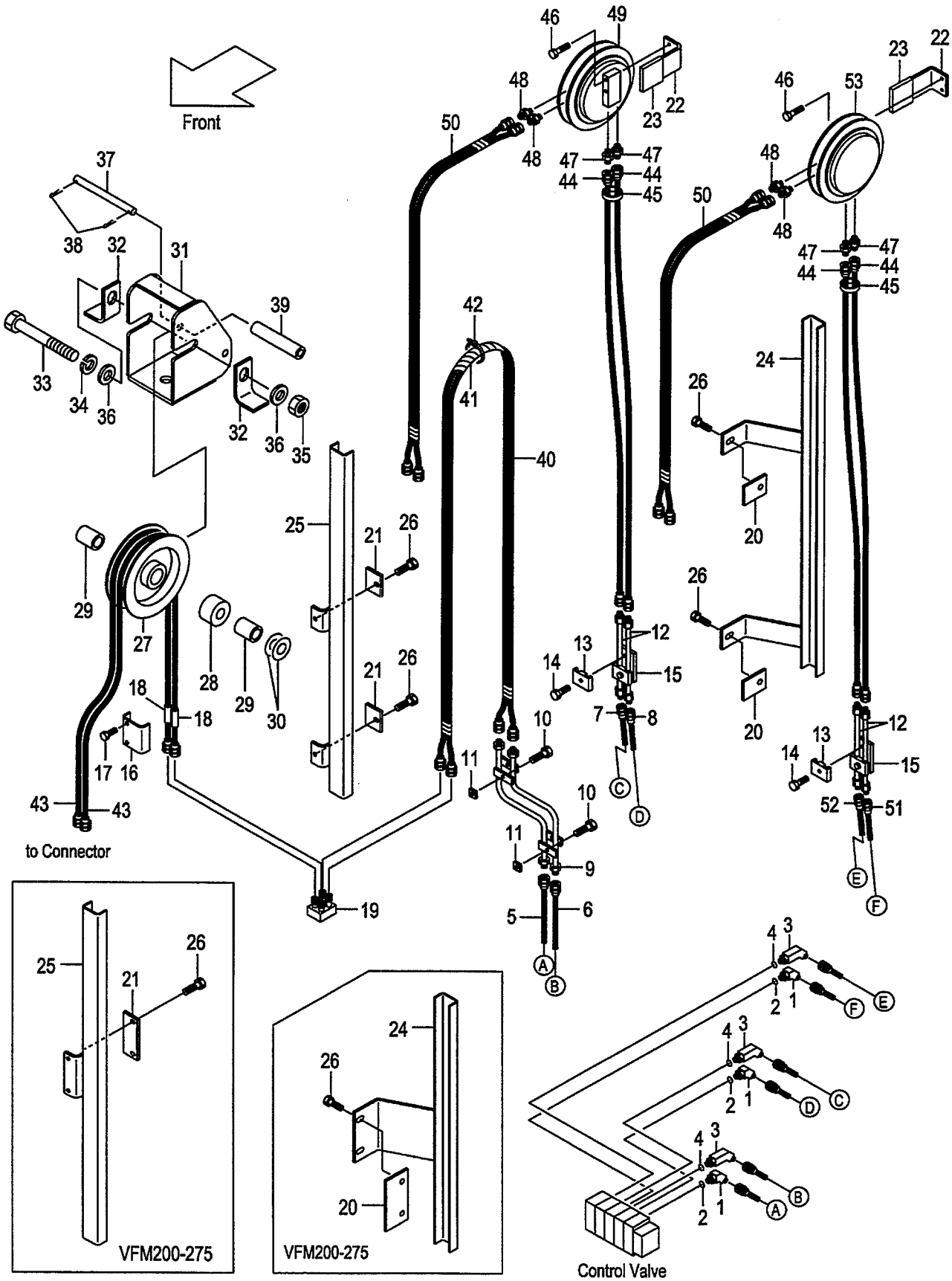

A:AP121F(VFM/J)

Item No	Part No.	Mark	Description		Req'd	Remarks : Serial No.
-	62170-13231		GUIDE VFM275	ｶﾞｲﾄﾞ	1	[AR5][5AP][ARE]
-	62170-12001		GUIDE VFM300	ｶﾞｲﾄﾞ	1	[AR5][5AP][ARE]
-	62170-13241		GUIDE VFM325	ｶﾞｲﾄﾞ	1	[AR5][5AP][ARE]
-	62170-13241		GUIDE VFM330	ｶﾞｲﾄﾞ	1	[AR5][5AP][ARE]
-	62170-13251		GUIDE VFM350	ｶﾞｲﾄﾞ	1	[AR5][5AP][ARE]
-	62170-13261		GUIDE VFM366	ｶﾞｲﾄﾞ	1	[AR5][5AP][ARE]
-	62170-13261		GUIDE VFM370	ｶﾞｲﾄﾞ	1	[AR5][5AP][ARE]
-	62170-13261		GUIDE VFM375	ｶﾞｲﾄﾞ	1	[AR5][5AP][ARE]
-	62170-13271		GUIDE VFM400	ｶﾞｲﾄﾞ	1	[AR5][5AP][ARE]
-	62170-13281		GUIDE VFM425	ｶﾞｲﾄﾞ	1	[AR5][5AP][ARE]
-	62170-13291		GUIDE VFM450	ｶﾞｲﾄﾞ	1	[AR5][5AP][ARE]
-	62170-13301		GUIDE VFM475	ｶﾞｲﾄﾞ	1	[AR5][5AP][ARE]
-	62170-13311		GUIDE VFM500	ｶﾞｲﾄﾞ	1	[AR5][5AP][ARE]
-	62170-13321		GUIDE VFM550	ｶﾞｲﾄﾞ	1	[AR5][5AP][ARE]
-	62170-13331		GUIDE VFM600	ｶﾞｲﾄﾞ	1	[AR5][5AP][ARE]
26	01183-08016		BOLT	ﾎﾞﾙﾄ	4	[AR5][5AP][ARE]
27	62170-12731		PULLEY	ﾌﾟｰﾘ	1	[AR5][5AP][ARE]
28	62170-12671		SPACER	ｽﾍﾟｰｻ	1	[AR5][5AP][ARE]
29	62170-12651		COLLAR	ｶﾗｰ	2	[AR5][5AP][ARE]
30	23917-42191		SHIM	ｼﾑ	2	[AR5][5AP][ARE]
31	62170-12501		BRACKET	ﾌﾞﾗｹｯﾄ	1	[AR5][5AP][ARE]
32	62170-12551		STOPPER	ｽﾄｯﾊﾟ	2	[AR5][5AP][ARE]
33	01100-16140		BOLT	ﾎﾞﾙﾄ	1	[AR5][5AP][ARE]
34	02010-00016		WASHER	ﾜｯｼｬ	1	[AR5][5AP][ARE]
35	01400-00016		NUT	ﾅｯﾄ	1	[AR5][5AP][ARE]
36	02000-00016		WASHER	ﾜｯｼｬ	2	[AR5][5AP][ARE]
37	62170-12701		PIN	ﾋﾟﾝ	1	[AR5][5AP][ARE]
38	02200-32020		PIN	ﾋﾟﾝ	2	[AR5][5AP][ARE]
39	62170-12711		COLLAR	ｶﾗｰ	1	[AR5][5AP][ARE]
40	63300-31090		HOSE VFM200	ﾎｰｽ	1	[AR5][5AP][ARE]
-	63300-31100		HOSE VFM225	ﾎｰｽ	1	[AR5][5AP][ARE]
-	63300-31115		HOSE VFM250	ﾎｰｽ	1	[AR5][5AP][ARE]
-	63300-31125		HOSE VFM270	ﾎｰｽ	1	[AR5][5AP][ARE]
-	63300-31125		HOSE VFM275	ﾎｰｽ	1	[AR5][5AP][ARE]
-	63300-31140		HOSE VFM300	ﾎｰｽ	1	[AR5][5AP][ARE]
-	63300-31150		HOSE VFM325	ﾎｰｽ	1	[AR5][5AP][ARE]
-	63300-31155		HOSE VFM330	ﾎｰｽ	1	[AR5][5AP][ARE]
-	63300-31165		HOSE VFM350	ﾎｰｽ	1	[AR5][5AP][ARE]
-	63300-31170		HOSE VFM366	ﾎｰｽ	1	[AR5][5AP][ARE]
-	63300-31175		HOSE VFM370	ﾎｰｽ	1	[AR5][5AP][ARE]
-	63300-31175		HOSE VFM375	ﾎｰｽ	1	[AR5][5AP][ARE]
-	63300-31185		HOSE VFM400	ﾎｰｽ	1	[AR5][5AP][ARE]
-	63300-31195		HOSE VFM425	ﾎｰｽ	1	[AR5][5AP][ARE]
-	63300-31210		HOSE VFM450	ﾎｰｽ	1	[AR5][5AP][ARE]
-	63300-31220		HOSE VFM475	ﾎｰｽ	1	[AR5][5AP][ARE]
-	63300-31235		HOSE VFM500	ﾎｰｽ	1	[AR5][5AP][ARE]
-	63300-21255		HOSE VFM550	ﾎｰｽ	1	[AR5][5AP][ARE]
-	63300-31280		HOSE VFM600	ﾎｰｽ	1	[AR5][5AP][ARE]
41	27730-62431		LAP,SPIRAL VFM200	ﾗｯﾌﾟ	1	[AR5][5AP][ARE]
-	27730-62431		LAP,SPIRAL VFM225	ﾗｯﾌﾟ	1	[AR5][5AP][ARE]

HYDRAULIC LINE
FIG.140 (CONT. VALVE-CONNECTOR)[AR5,5AP,ARE]
(A502APB0) ハイドロリックライン (コントロールバルブ-コネクタ)

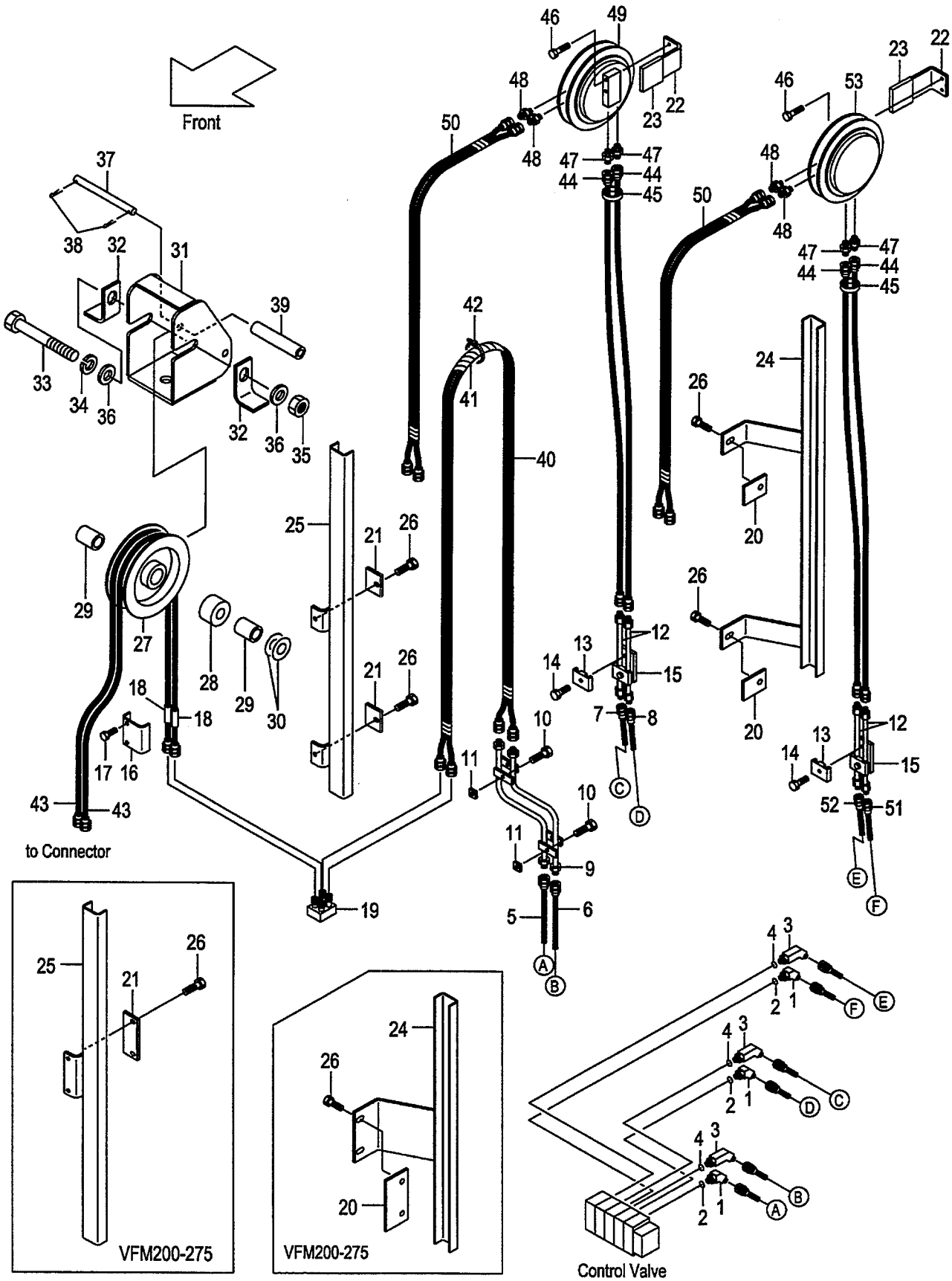

A:AP121F(VFM/J)

Item No	Part No.	Mark	Description		Req'd	Remarks : Serial No.
-	27730-62451		LAP,SPIRAL VFM250	ﾗｯﾌﾟ	1	[AR5][5AP][ARE]
-	27730-62461		LAP,SPIRAL VFM270	ﾗｯﾌﾟ	1	[AR5][5AP][ARE]
-	27730-62461		LAP,SPIRAL VFM275	ﾗｯﾌﾟ	1	[AR5][5AP][ARE]
-	27730-62471		LAP,SPIRAL VFM300	ﾗｯﾌﾟ	1	[AR5][5AP][ARE]
-	27730-62481		LAP,SPIRAL VFM325	ﾗｯﾌﾟ	1	[AR5][5AP][ARE]
-	27730-62481		LAP,SPIRAL VFM330	ﾗｯﾌﾟ	1	[AR5][5AP][ARE]
-	27730-62491		LAP,SPIRAL VFM350	ﾗｯﾌﾟ	1	[AR5][5AP][ARE]
-	27730-62491		LAP,SPIRAL VFM366	ﾗｯﾌﾟ	1	[AR5][5AP][ARE]
-	27730-62491		LAP,SPIRAL VFM370	ﾗｯﾌﾟ	1	[AR5][5AP][ARE]
-	27730-62491		LAP,SPIRAL VFM375	ﾗｯﾌﾟ	1	[AR5][5AP][ARE]
-	62140-12811		LAP,SPIRAL VFM400	ﾗｯﾌﾟ	1	[AR5][5AP][ARE]
-	62140-12811		LAP,SPIRAL VFM425	ﾗｯﾌﾟ	1	[AR5][5AP][ARE]
-	62140-12821		LAP,SPIRAL VFM450	ﾗｯﾌﾟ	1	[AR5][5AP][ARE]
-	62140-12821		LAP,SPIRAL VFM475	ﾗｯﾌﾟ	1	[AR5][5AP][ARE]
-	62140-12831		LAP,SPIRAL VFM500	ﾗｯﾌﾟ	1	[AR5][5AP][ARE]
-	62140-12841		LAP,SPIRAL VFM550	ﾗｯﾌﾟ	1	[AR5][5AP][ARE]
-	62140-12851		LAP,SPIRAL VFM600	ﾗｯﾌﾟ	1	[AR5][5AP][ARE]
42	27132-40181		BAND	ﾊﾞﾝﾄﾞ	5	[AR5][5AP][ARE]
43	04601-33170		HOSE VFM200	ﾎｰｽ	2	[AR5][5AP][ARE]
-	04601-33185		HOSE VFM225	ﾎｰｽ	2	[AR5][5AP][ARE]
-	04601-33195		HOSE VFM250	ﾎｰｽ	2	[AR5][5AP][ARE]
-	04601-33205		HOSE VFM270	ﾎｰｽ	2	[AR5][5AP][ARE]
-	04601-33210		HOSE VFM275	ﾎｰｽ	2	[AR5][5AP][ARE]
-	04601-33220		HOSE VFM300	ﾎｰｽ	2	[AR5][5AP][ARE]
-	04601-33235		HOSE VFM325	ﾎｰｽ	2	[AR5][5AP][ARE]
-	04601-33235		HOSE VFM330	ﾎｰｽ	2	[AR5][5AP][ARE]
-	04601-33245		HOSE VFM350	ﾎｰｽ	2	[AR5][5AP][ARE]
-	04601-33255		HOSE VFM366	ﾎｰｽ	2	[AR5][5AP][ARE]
-	04601-33255		HOSE VFM370	ﾎｰｽ	2	[AR5][5AP][ARE]
-	04601-33260		HOSE VFM375	ﾎｰｽ	2	[AR5][5AP][ARE]
-	04601-33265		HOSE VFM400	ﾎｰｽ	2	[AR5][5AP][ARE]
-	04601-33280		HOSE VFM425	ﾎｰｽ	2	[AR5][5AP][ARE]
-	04601-33290		HOSE VFM450	ﾎｰｽ	2	[AR5][5AP][ARE]
-	04601-33305		HOSE VFM475	ﾎｰｽ	2	[AR5][5AP][ARE]
-	04601-33315		HOSE VFM500	ﾎｰｽ	2	[AR5][5AP][ARE]
-	04601-33335		HOSE VFM550	ﾎｰｽ	2	[AR5][5AP][ARE]
-	04601-33360		HOSE VFM600	ﾎｰｽ	2	[AR5][5AP][ARE]
44	63130-21065		HOSE VFM200	ﾎｰｽ	4	[AR5][5AP][ARE]
-	63130-21075		HOSE VFM225	ﾎｰｽ	4	[AR5][5AP][ARE]
-	63130-21090		HOSE VFM250	ﾎｰｽ	4	[AR5][5AP][ARE]
-	63130-21100		HOSE VFM270	ﾎｰｽ	4	[AR5][5AP][ARE]
-	63130-21100		HOSE VFM275	ﾎｰｽ	4	[AR5][5AP][ARE]
-	63130-21115		HOSE VFM300	ﾎｰｽ	4	[AR5][5AP][ARE]
-	63130-21125		HOSE VFM325	ﾎｰｽ	4	[AR5][5AP][ARE]
-	63130-21130		HOSE VFM330	ﾎｰｽ	4	[AR5][5AP][ARE]
-	63130-21140		HOSE VFM350	ﾎｰｽ	4	[AR5][5AP][ARE]
-	63130-21145		HOSE VFM366	ﾎｰｽ	4	[AR5][5AP][ARE]
-	63130-21145		HOSE VFM370	ﾎｰｽ	4	[AR5][5AP][ARE]
-	63130-21150		HOSE VFM375	ﾎｰｽ	4	[AR5][5AP][ARE]
-	63130-21160		HOSE VFM400	ﾎｰｽ	4	[AR5][5AP][ARE]

HYDRAULIC LINE
FIG.140 (CONT. VALVE-CONNECTOR)[AR5,5AP,ARE]
(A502APB0) ハイドロリックライン (コントロールバルブ-コネクタ)

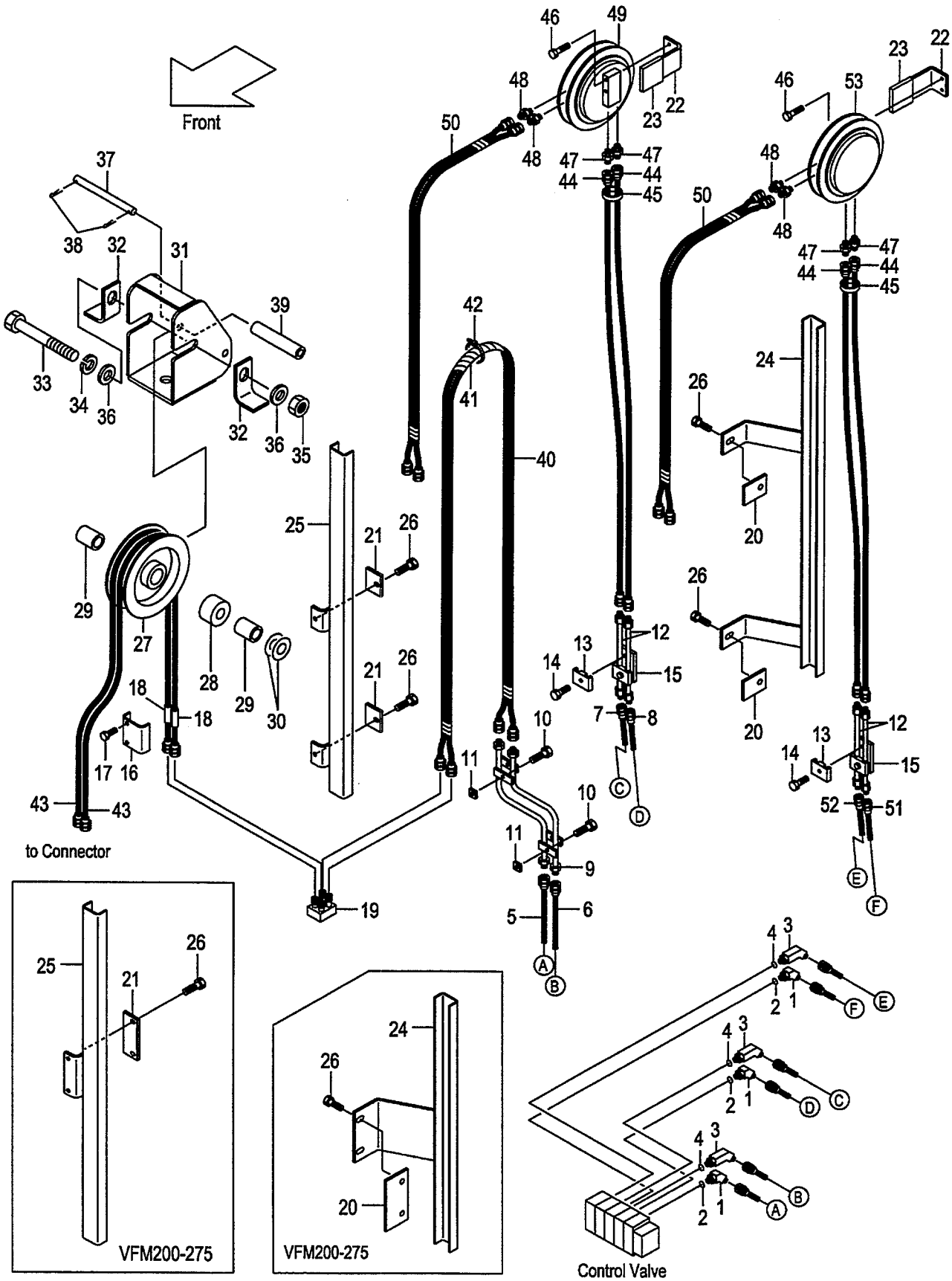

A:AP121F(VFM/J)

Item No	Part No.	Mark	Description		Req'd	Remarks : Serial No.
-	63130-21170		HOSE VFM425	ホース	4	[AR5][5AP][ARE]
-	63130-21185		HOSE VFM450	ホース	4	[AR5][5AP][ARE]
-	63130-21195		HOSE VFM475	ホース	4	[AR5][5AP][ARE]
-	63130-21210		HOSE VFM500	ホース	4	[AR5][5AP][ARE]
-	63130-21230		HOSE VFM550	ホース	4	[AR5][5AP][ARE]
-	63130-21280		HOSE VFM600	ホース	4	[AR5][5AP][ARE]
45	27262-42091		BAND	バンド	4	[AR5][5AP][ARE]
46	01184-12065		BOLT	ボルト	4	[AR5][5AP][ARE]
47	97050-01971		FITTING	フィッティング	4	[AR5][5AP][ARE]
48	97060-45111		FITTING	フィッティング	4	[AR5][5AP][ARE]
49	61170-23001		REEL,HOSE,RH	リール	1	[AR5][5AP][ARE]
50	63130-12621		HOSE	ホース	2	[(AR5,5AP,ARE)/VFM200-475]
-	63130-12601		HOSE	ホース	2	[(AR5,5AP,ARE)/VFM500-600]
51	62150-12522		HOSE	ホース	1	[AR5][5AP][ARE]
52	62150-12532		HOSE	ホース	1	[AR5][5AP][ARE]
53	61170-23011		REEL,HOSE,LH	リール	1	[AR5][5AP][ARE]
54	62170-12611	+	PLATE	プレート	1	[AR5][5AP][ARE]
55	01183-08016	+	BOLT & WASHER	ボルト&ワッシャ	2	[AR5][5AP][ARE]
K1	BS-51502-08610		KIT,SEAL,REEL	リールシールキット	2	

FIG.141 HYDRAULIC LINE (CONTROL VALVE-CONNECTOR)[A3R,A3S]

(A502APC0) ﾊｲﾄﾞﾛﾘｯｸﾗｲﾝ (ｺﾝﾄﾛｰﾙﾊﾞﾙﾌﾞ-ｺﾈｸﾀ)

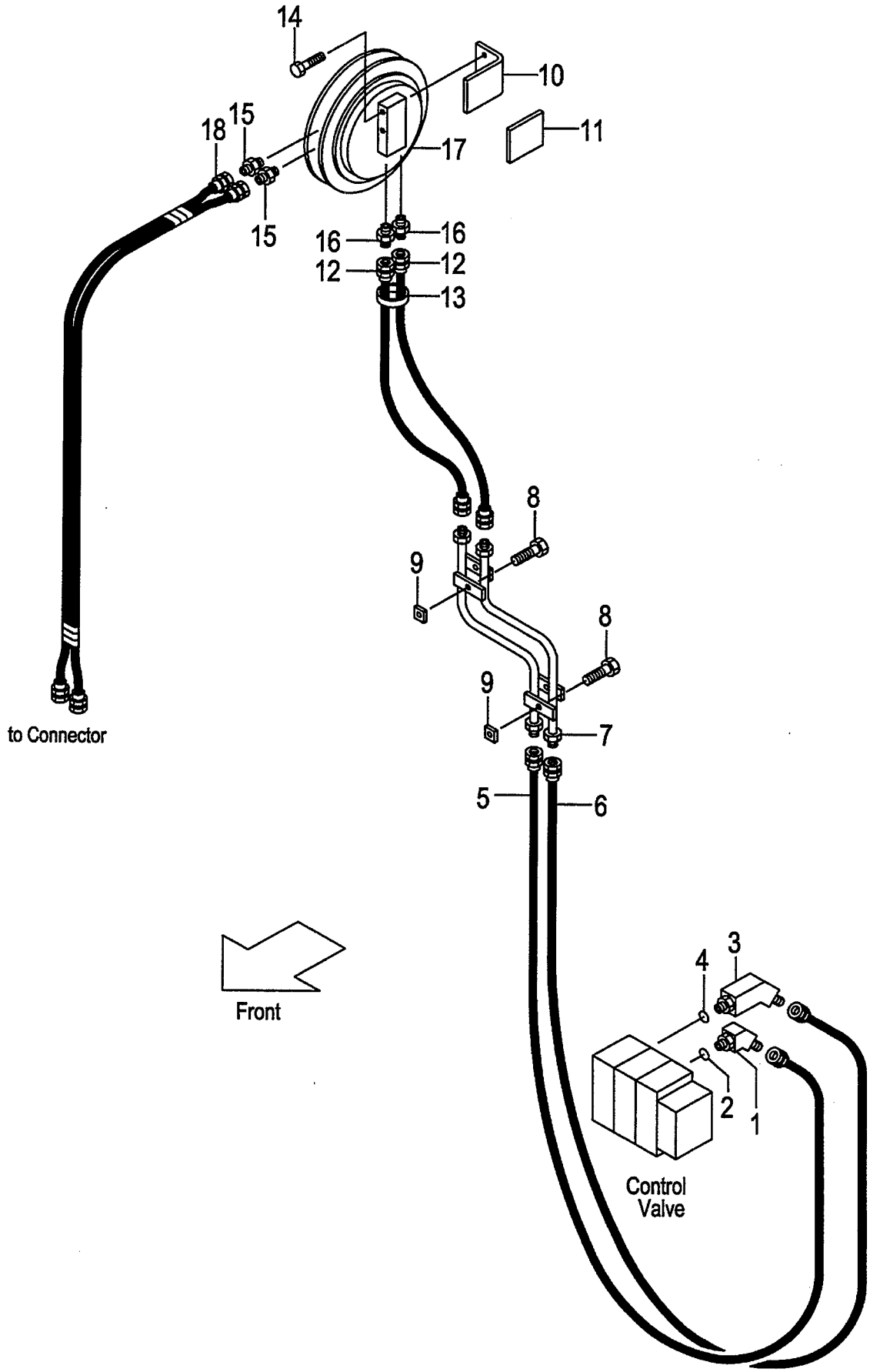

A:AP121F(VFM/J)

Item No	Part No.	Mark	Description		Req'd	Remarks : Serial No.
A1	NO PART NO.	#	ELBOW-ASSY	ｴﾙﾎﾞｱｯｾﾝ	1	[A3R][A3S] INC.1,2
1	63130-12071		ELBOW	ｴﾙﾎﾞ	1	[A3R][A3S]
2	03320-00140		O-RING	Oﾘﾝｸﾞ	1	[A3R][A3S]
A2	NO PART NO.	#	ELBOW-ASSY	ｴﾙﾎﾞｱｯｾﾝ	1	[A3R][A3S] INC.3,4
3	62160-10011		ELBOW	ｴﾙﾎﾞ	1	[A3R][A3S]
4	03320-00140		O-RING	Oﾘﾝｸﾞ	1	[A3R][A3S]
5	62160-12302		HOSE	ﾎｰｽ	1	[A3R][A3S]
6	62160-12312		HOSE	ﾎｰｽ	1	[A3R][A3S]
7	62170-12311		PIPE	ﾊﾟｲﾌﾟ	1	[A3R][A3S]
8	01183-08016		BOLT	ﾎﾞﾙﾄ	2	[A3R][A3S]
9	62150-12981		BLOCK	ﾌﾞﾛｯｸ	2	[A3R][A3S]
10	62170-12901		BRACKET	ﾌﾞﾗｹｯﾄ	1	[A3R][A3S]
11	61163-32012		PLATE	ﾌﾟﾚｰﾄ	1	[A3R][A3S]
12	63130-21065		HOSE VFM200	ﾎｰｽ	2	[A3R][A3S]
-	63130-21075		HOSE VFM225	ﾎｰｽ	2	[A3R][A3S]
-	63130-21090		HOSE VFM250	ﾎｰｽ	2	[A3R][A3S]
-	63130-21100		HOSE VFM270	ﾎｰｽ	2	[A3R][A3S]
-	63130-21100		HOSE VFM275	ﾎｰｽ	2	[A3R][A3S]
-	63130-21115		HOSE VFM300	ﾎｰｽ	2	[A3R][A3S]
-	63130-21125		HOSE VFM325	ﾎｰｽ	2	[A3R][A3S]
-	63130-21130		HOSE VFM330	ﾎｰｽ	2	[A3R][A3S]
-	63130-21140		HOSE VFM350	ﾎｰｽ	2	[A3R][A3S]
-	63130-21145		HOSE VFM366	ﾎｰｽ	2	[A3R][A3S]
-	63130-21145		HOSE VFM370	ﾎｰｽ	2	[A3R][A3S]
-	63130-21150		HOSE VFM375	ﾎｰｽ	2	[A3R][A3S]
-	63130-21160		HOSE VFM400	ﾎｰｽ	2	[A3R][A3S]
-	63130-21170		HOSE VFM425	ﾎｰｽ	2	[A3R][A3S]
-	63130-21185		HOSE VFM450	ﾎｰｽ	2	[A3R][A3S]
-	63130-21195		HOSE VFM475	ﾎｰｽ	2	[A3R][A3S]
-	63130-21210		HOSE VFM500	ﾎｰｽ	2	[A3R][A3S]
-	63130-21230		HOSE VFM550	ﾎｰｽ	2	[A3R][A3S]
-	63130-21280		HOSE VFM600	ﾎｰｽ	2	[A3R][A3S]
13	27262-42091		BAND	ﾊﾞﾝﾄﾞ	2	[A3R][A3S]
14	01184-12065		BOLT	ﾎﾞﾙﾄ	2	[A3R][A3S]
15	97050-01971		FITTING	ﾌｨｯﾃｨﾝｸﾞ	2	[A3R][A3S]
16	97060-45111		FITTING	ﾌｨｯﾃｨﾝｸﾞ	2	[A3R][A3S]
17	61170-23001		REEL,HOSE	ﾘｰﾙ	1	[A3R][A3S]
18	63130-12621		HOSE	ﾎｰｽ	1	[(A3R,A3S)/VFM200-475]
-	63130-12601		HOSE	ﾎｰｽ	1	[(A3R,A3S)/VFM500-600]
K1	BS-51502-08610		KIT,SEAL,REEL	ﾘｰﾙｼｰﾙｷｯﾄ	1	

FIG.142 HYDRAULIC LINE (CONTROL VALVE-CONNECTOR)[A4R,A4S]

(A502APD0) ﾊｲﾄﾞﾛﾘｯｸﾗｲﾝ (ｺﾝﾄﾛｰﾙﾊﾞﾙﾌﾞ-ｺﾈｸﾀ)

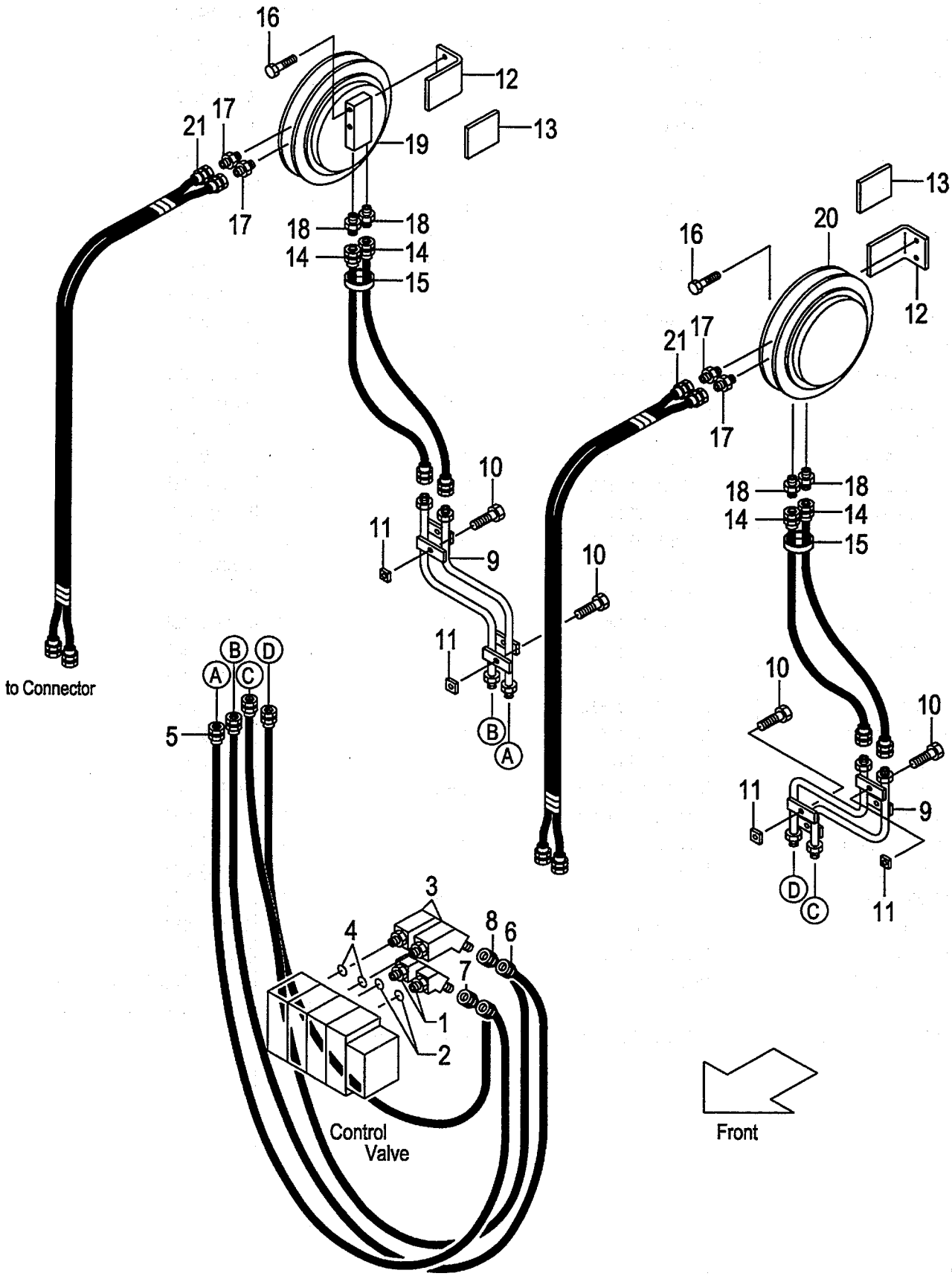

A:AP121F(VFM/J)

Item No	Part No.	Mark	Description		Req'd	Remarks : Serial No.
A1	NO PART NO.	#	ELBOW-ASSY	ｴﾙﾎﾞｱｯｾﾝ	2	[A4R][A4S] INC.1,2
1	63130-12071		ELBOW	ｴﾙﾎﾞ	2	[A4R][A4S]
2	03320-00140		O-RING	Oﾘﾝｸﾞ	2	[A4R][A4S]
A2	NO PART NO.	#	ELBOW-ASSY	ｴﾙﾎﾞｱｯｾﾝ	2	[A4R][A4S] INC.3,4
3	62160-10011		ELBOW	ｴﾙﾎﾞ	2	[A4R][A4S]
4	03320-00140		O-RING	Oﾘﾝｸﾞ	2	[A4R][A4S]
5	62160-12302		HOSE	ﾎｰｽ	2	[A4R][A4S]
6	62160-12312		HOSE	ﾎｰｽ	2	[A4R][A4S]
7	62150-12522		HOSE	ﾎｰｽ	1	[A4R][A4S]
8	62150-12532		HOSE	ﾎｰｽ	1	[A4R][A4S]
9	62170-12311		PIPE	ﾊﾟｲﾌﾟ	2	[A4R][A4S]
10	01183-08016		BOLT	ﾎﾞﾙﾄ	4	[A4R][A4S]
11	62150-12981		BLOCK	ﾌﾞﾛｯｸ	4	[A4R][A4S]
12	62170-12901		BRACKET	ﾌﾞﾗｹｯﾄ	2	[A4R][A4S]
13	61163-32012		PLATE	ﾌﾟﾚｰﾄ	2	[A4R][A4S]
14	63130-21065		HOSE VFM200	ﾎｰｽ	4	[A4R][A4S]
-	63130-21075		HOSE VFM225	ﾎｰｽ	4	[A4R][A4S]
-	63130-21090		HOSE VFM250	ﾎｰｽ	4	[A4R][A4S]
-	63130-21100		HOSE VFM270	ﾎｰｽ	4	[A4R][A4S]
-	63130-21100		HOSE VFM275	ﾎｰｽ	4	[A4R][A4S]
-	63130-21115		HOSE VFM300	ﾎｰｽ	4	[A4R][A4S]
-	63130-21125		HOSE VFM325	ﾎｰｽ	4	[A4R][A4S]
-	63130-21130		HOSE VFM330	ﾎｰｽ	4	[A4R][A4S]
-	63130-21140		HOSE VFM350	ﾎｰｽ	4	[A4R][A4S]
-	63130-21145		HOSE VFM366	ﾎｰｽ	4	[A4R][A4S]
-	63130-21145		HOSE VFM370	ﾎｰｽ	4	[A4R][A4S]
-	63130-21150		HOSE VFM375	ﾎｰｽ	4	[A4R][A4S]
-	63130-21160		HOSE VFM400	ﾎｰｽ	4	[A4R][A4S]
-	63130-21170		HOSE VFM425	ﾎｰｽ	4	[A4R][A4S]
-	63130-21185		HOSE VFM450	ﾎｰｽ	4	[A4R][A4S]
-	63130-21195		HOSE VFM475	ﾎｰｽ	4	[A4R][A4S]
-	63130-21210		HOSE VFM500	ﾎｰｽ	4	[A4R][A4S]
-	63130-21230		HOSE VFM550	ﾎｰｽ	4	[A4R][A4S]
-	63130-21280		HOSE VFM600	ﾎｰｽ	4	[A4R][A4S]
15	27262-42091		BAND	ﾊﾞﾝﾄﾞ	4	[A4R][A4S]
16	01184-12065		BOLT	ﾎﾞﾙﾄ	4	[A4R][A4S]
17	97050-01971		FITTING	ﾌｨｯﾃｨﾝｸﾞ	4	[A4R][A4S]
18	97060-45111		FITTING	ﾌｨｯﾃｨﾝｸﾞ	4	[A4R][A4S]
19	61170-23001		REEL,HOSE,RH	ﾘｰﾙ	1	[A4R][A4S]
20	61170-23011		REEL,HOSE,LH	ﾘｰﾙ	1	[A4R][A4S]
21	63130-12621		HOSE	ﾎｰｽ	2	[(A4R,A4S)/VFM200-475]
-	63130-12601		HOSE	ﾎｰｽ	2	[(A4R,A4S)/VFM500-600]
K1	BS-51502-08610		KIT,SEAL,REEL	ﾘｰﾙｼｰﾙｷｯﾄ	2	

FIG.143 HYDRAULIC LINE (RELIEF VALVE)[VRV]

(A502APE0) ﾊｲﾄﾞﾛﾘｯｸﾗｲﾝ (ﾘﾘｰﾌﾊﾞﾙﾌﾞ)

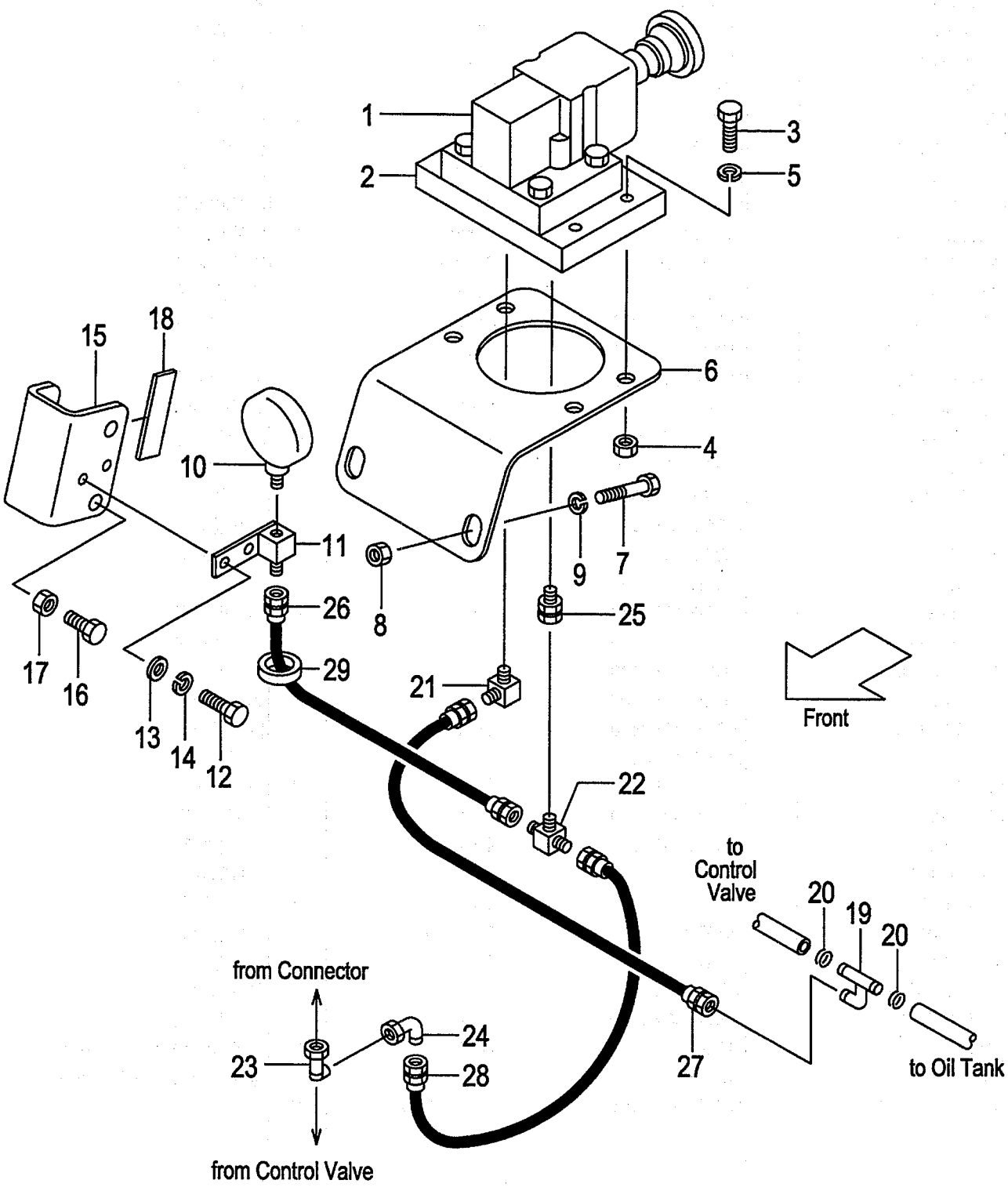

A:AP121F(VFM/J)

Item No	Part No.	Mark	Description		Req'd	Remarks : Serial No.
1	63130-15771		VALVE,RELIEF	ﾊﾞﾙﾌﾞ	1	[VRV]
2	63130-15921		PLATE	ﾌﾟﾚｰﾄ	1	[VRV]
3	01181-08030		BOLT	ﾎﾞﾙﾄ	4	[VRV]
4	01400-00008		NUT	ﾅｯﾄ	4	[VRV]
5	02010-00008		WASHER	ﾜｯｼｬ	4	[VRV]
6	61170-10151		BRACKET	ﾌﾞﾗｹｯﾄ	1	[VRV]
7	01181-10025		BOLT	ﾎﾞﾙﾄ	2	[VRV]
8	01400-00010		NUT	ﾅｯﾄ	2	[VRV]
9	02010-00010		WASHER	ﾜｯｼｬ	2	[VRV]
10	63110-20221		GAUGE	ｹﾞｰｼﾞ	1	[VRV]
11	62150-14041		STUD	ｽﾀｯﾄﾞ	1	[VRV]
12	01100-08012		BOLT	ﾎﾞﾙﾄ	2	[VRV]
13	02000-00008		WASHER	ﾜｯｼｬ	2	[VRV]
14	02010-00008		WASHER	ﾜｯｼｬ	2	[VRV]
15	61170-10101		BRACKET	ﾌﾞﾗｹｯﾄ	1	[VRV]
16	01100-10016		BOLT	ﾎﾞﾙﾄ	2	[VRV]
17	01402-00010		NUT	ﾅｯﾄ	2	[VRV]
18	61170-10111		RUBBER	ﾗﾊﾞｰ	1	[VRV]
19	62150-14011		PIPE	ﾊﾟｲﾌﾟ	1	[VRV]
20	63110-20261		CLIP	ｸﾘｯﾌﾟ	2	[VRV]
21	53110-12121		ELBOW	ｴﾙﾎﾞ	1	[VRV]
22	61170-10201		THREE-WAY	ｽﾘｰｳｴｲ	1	[VRV]
23	62150-14001		THREE-WAY	ｽﾘｰｳｴｲ	1	[VRV]
24	62150-14311		ELBOW	ｴﾙﾎﾞ	1	[VRV]
25	04138-00303		UNION	ﾕﾆｵﾝ	1	[VRV]
26	63130-31055		HOSE	ﾎｰｽ	1	[VRV]
27	63130-21085		HOSE	ﾎｰｽ	1	[VRV]
28	63130-21120		HOSE	ﾎｰｽ	1	[VRV]
29	04913-11300		BAND	ﾊﾞﾝﾄﾞ	2	[VRV]
30	63130-12751	+	PLUG	ﾌﾟﾗｸﾞ	1	[VRV]

FIG.144 LAMP BRACKET [AP121F]

(A502APF0) ﾗﾝﾌﾟﾌﾞﾗｹｯﾄ

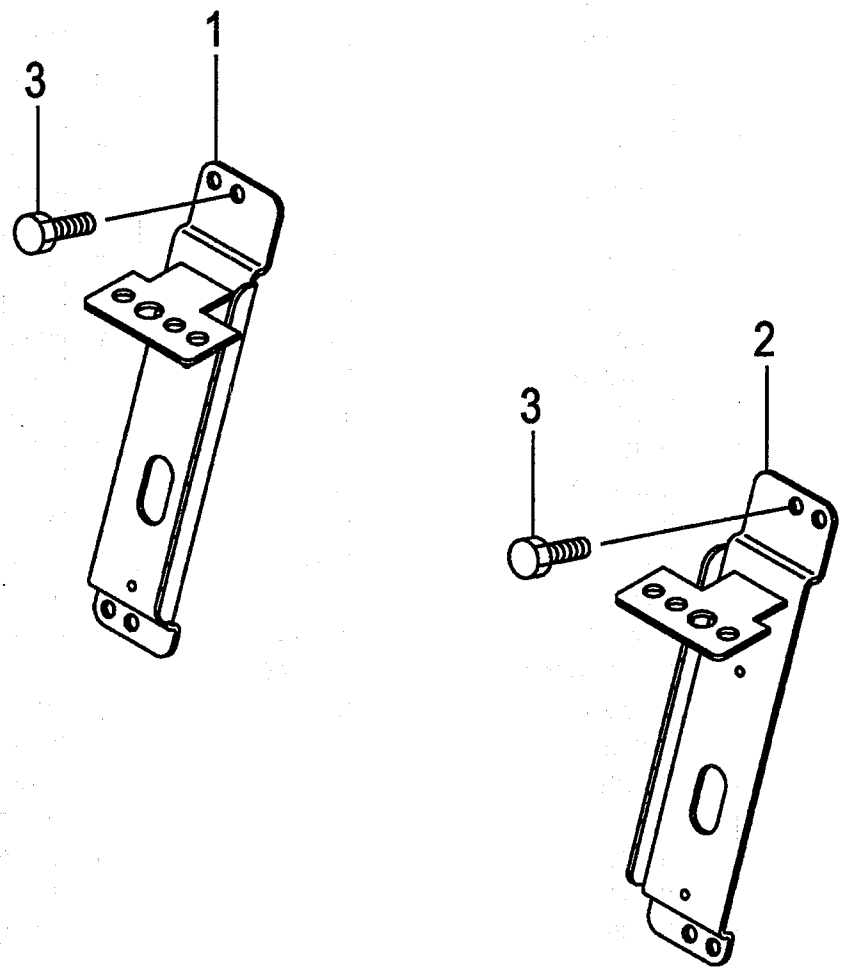

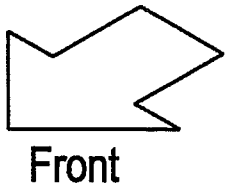

A:AP121F(VFM/J)

Item No	Part No.	Mark	Description		Req'd	Remarks : Serial No.
1	239A5-12521		BRACKET,RH	ﾌﾞﾗｹｯﾄ	1	
2	239A5-12501		BRACKET,LH	ﾌﾞﾗｹｯﾄ	1	
3	01183-08016		BOLT	ﾎﾞﾙﾄ	4	
4	04913-11100	+	BAND	ﾊﾞﾝﾄﾞ	2	
5	239A2-42221	+	WIRE-HARNESS,HG	ﾜｲﾔﾊｰﾈｽ	2	
6	216G2-40602	+	LAMP,HEAD	ﾗﾝﾌﾟ	2	INC.7
7	216G2-40611	+	BULB,12V/55W	ﾊﾞﾙﾌﾞ	1	
8	216G2-40701	+	LAMP,COMBI.,FRONT	ﾗﾝﾌﾟ	2	INC.9-11
9	216G2-40711	+	BULB,TURN SIGNAL	ﾊﾞﾙﾌﾞ	1	
10	216G2-40721	+	BULB,12V/10W	ﾊﾞﾙﾌﾞ	1	
11	216G2-40731	+	LENS	ﾚﾝｽﾞ	1	

LAMP BKT.[AP121F/(AR4,AR5,4AP,5AP,ARD,ARE, A3R,A4R,A3S,A4S)]

FIG.145

(A502APG0) ﾗﾝﾌﾟﾌﾞﾗｹｯﾄ

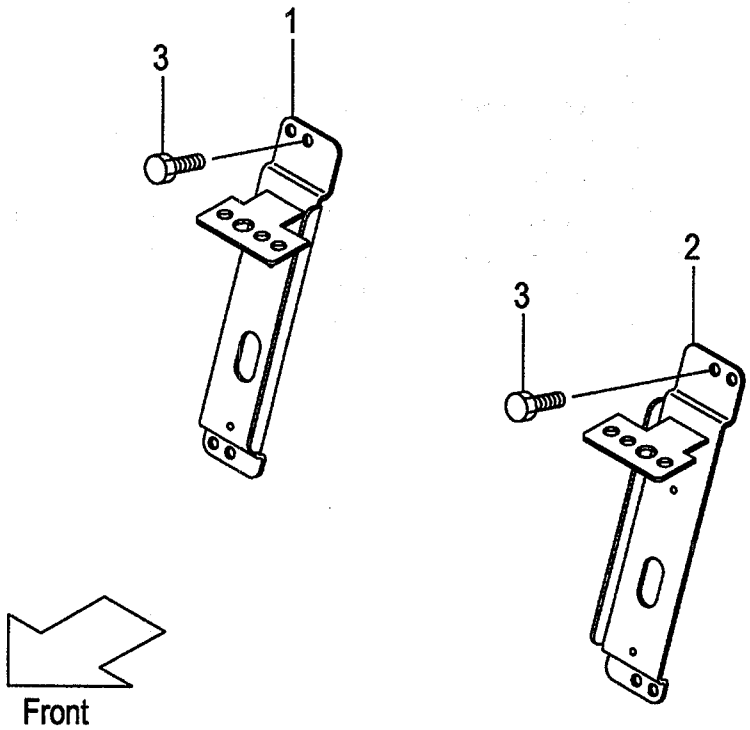

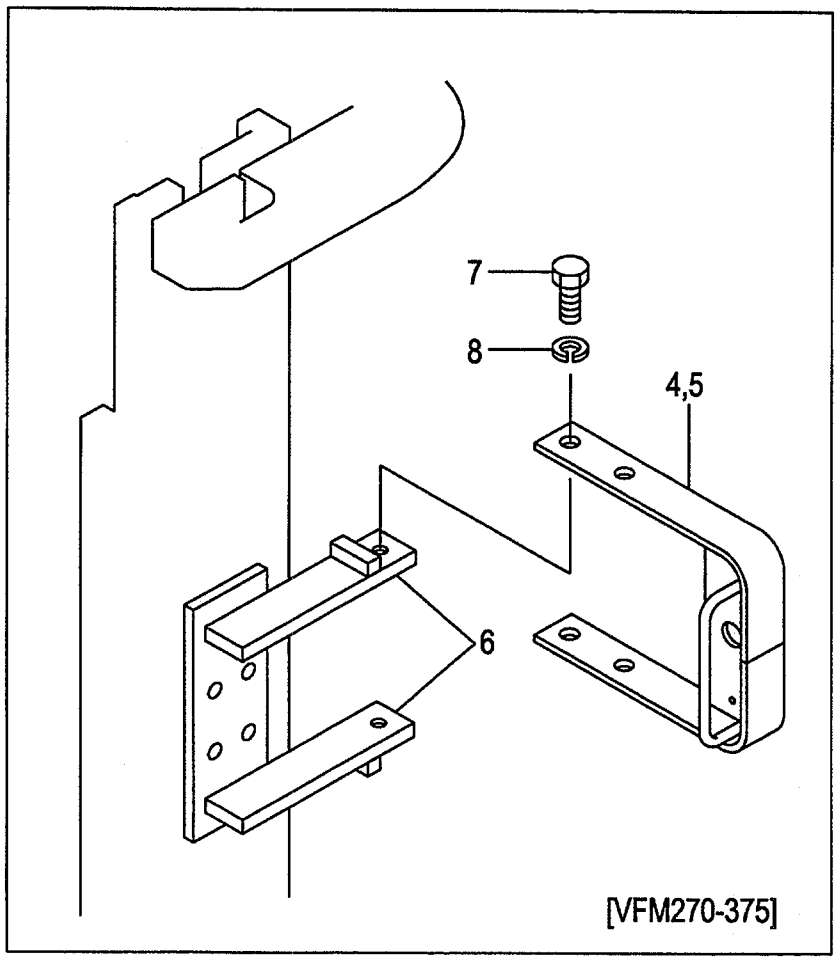

A:AP121F(VFM/J)

Item No	Part No.	Mark	Description		Req'd	Remarks : Serial No.
1	239A5-12521		BRACKET,RH	ﾌﾞﾗｹｯﾄ	1	[(AR4,AR5,4AP,5AP,ARD,ARE) /(VFM200-250,400-600)]
-	239A5-12521		BRACKET,RH	ﾌﾞﾗｹｯﾄ	1	[(A3R,A4R,A3S,A4S) /(VFM200-250,400-600)]
2	239A5-12501		BRACKET,LH	ﾌﾞﾗｹｯﾄ	1	[(AR4,AR5,4AP,5AP,ARD,ARE) /(VFM200-250,400-600)]
-	239A5-12501		BRACKET,LH	ﾌﾞﾗｹｯﾄ	1	[(A3R,A4R,A3S,A4S) /(VFM200-250,400-600)]
3	01183-08016		BOLT	ﾎﾞﾙﾄ	4	[(AR4,AR5,4AP,5AP,ARD,ARE) /(VFM200-250,400-600)]
-	01183-08016		BOLT	ﾎﾞﾙﾄ	4	[(A3R,A4R,A3S,A4S) /(VFM200-250,400-600)]
4	534A9-22001		BRACKET,RH	ﾌﾞﾗｹｯﾄ	1	[(AR4,AR5,4AP,5AP,ARD,ARE) /VFM270-375]
-	534A9-22001		BRACKET,RH	ﾌﾞﾗｹｯﾄ	1	[(A3R,A4R,A3S,A4S)/VFM270-375]
5	534A9-22011		BRACKET,LH	ﾌﾞﾗｹｯﾄ	1	[(AR4,AR5,4AP,5AP,ARD,ARE) /VFM270-375]
-	534A9-22011		BRACKET,LH	ﾌﾞﾗｹｯﾄ	1	[(A3R,A4R,A3S,A4S)/VFM270-375]
6	621B0-12641		BRACKET	ﾌﾞﾗｹｯﾄ	4	[(AR4,AR5,4AP,5AP,ARD,ARE) /VFM270-375]
-	621B0-12641		BRACKET	ﾌﾞﾗｹｯﾄ	4	[(A3R,A4R,A3S,A4S)/VFM270-375]
7	01100-12020		BOLT	ﾎﾞﾙﾄ	4	[(AR4,AR5,4AP,5AP,ARD,ARE) /VFM270-375]
-	01100-12020		BOLT	ﾎﾞﾙﾄ	4	[(A3R,A4R,A3S,A4S)/VFM270-375]
8	02010-00012		WASHER	ﾜｯｼｬ	4	[(AR4,AR5,4AP,5AP,ARD,ARE) /VFM270-375]
-	02010-00012		WASHER	ﾜｯｼｬ	4	[(A3R,A4R,A3S,A4S)/VFM270-375]
9	239A2-42221	+	WIRE-HARNESS,HG	ﾜｲﾔﾊｰﾈｽ	2	[(AR4,AR5,4AP,5AP,ARD,ARE) /(VFM200-250,400-600)]
-	239A2-42221	+	WIRE-HARNESS,HG	ﾜｲﾔﾊｰﾈｽ	2	[(A3R,A4R,A3S,A4S) /(VFM200-250,400-600)]
-	534A9-22201	+	WIRE-HARNESS,HG	ﾜｲﾔﾊｰﾈｽ	2	[(AR4,AR5,4AP,5AP,ARD,ARE) /VFM270-300]
-	534A9-22201	+	WIRE-HARNESS,HG	ﾜｲﾔﾊｰﾈｽ	2	[(A3R,A4R,A3S,A4S)/VFM270-300]
-	534A9-22211	+	WIRE-HARNESS,HG	ﾜｲﾔﾊｰﾈｽ	2	[(AR4,AR5,4AP,5AP,ARD,ARE) /VFM325-375]
-	534A9-22211	+	WIRE-HARNESS,HG	ﾜｲﾔﾊｰﾈｽ	2	[(A3R,A4R,A3S,A4S)/VFM325-375]
10	27732-42221	+	CLAMP	ｸﾗﾝﾌﾟ	2	[(AR4,AR5,4AP,5AP,ARD,ARE) /VFM270-375]
-	27732-42221	+	CLAMP	ｸﾗﾝﾌﾟ	2	[(A3R,A4R,A3S,A4S)/VFM270-375]
11	04913-11100	+	BAND	ﾊﾞﾝﾄﾞ	2	[(AR4,AR5,4AP,5AP,ARD,ARE) /(VFM200-250,400-600)]
-	04913-11100	+	BAND	ﾊﾞﾝﾄﾞ	2	[(A3R,A4R,A3S,A4S) /(VFM200-250,400-600)]
-	04913-11380	+	BAND	ﾊﾞﾝﾄﾞ	4	[(AR4,AR5,4AP,5AP,ARD,ARE) /VFM270-300]
-	04913-11380	+	BAND	ﾊﾞﾝﾄﾞ	4	[(A3R,A4R,A3S,A4S)/VFM270-300]
-	04913-11380	+	BAND	ﾊﾞﾝﾄﾞ	6	[(AR4,AR5,4AP,5AP,ARD,ARE) /VFM325-375]
-	04913-11380	+	BAND	ﾊﾞﾝﾄﾞ	6	[(A3R,A4R,A3S,A4S)/VFM325-375]

LAMP BKT.[AP121F/(AR4,AR5,4AP,5AP,ARD,ARE, A3R,A4R,A3S,A4S)]

FIG.145

(A502APG0) ﾗﾝﾌﾟﾌﾞﾗｹｯﾄ

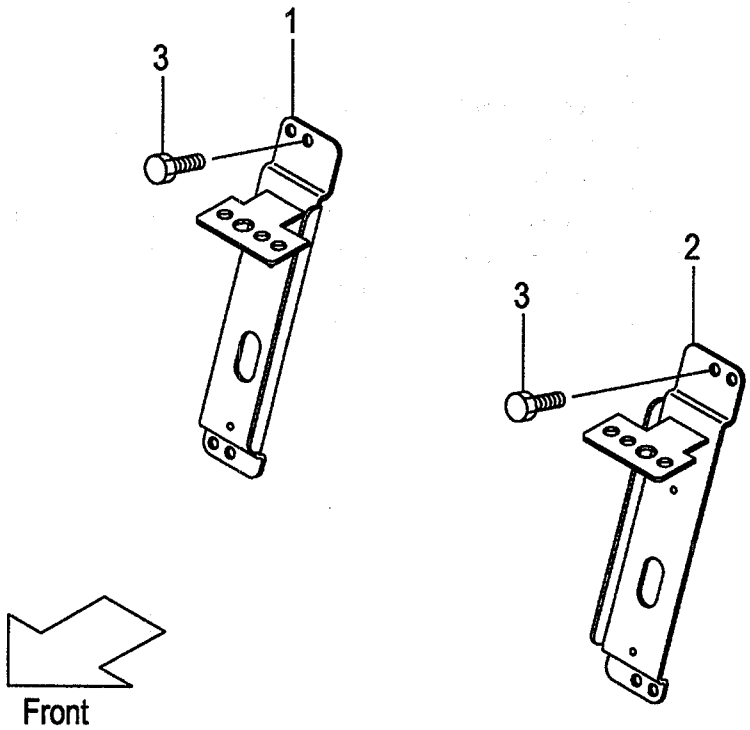

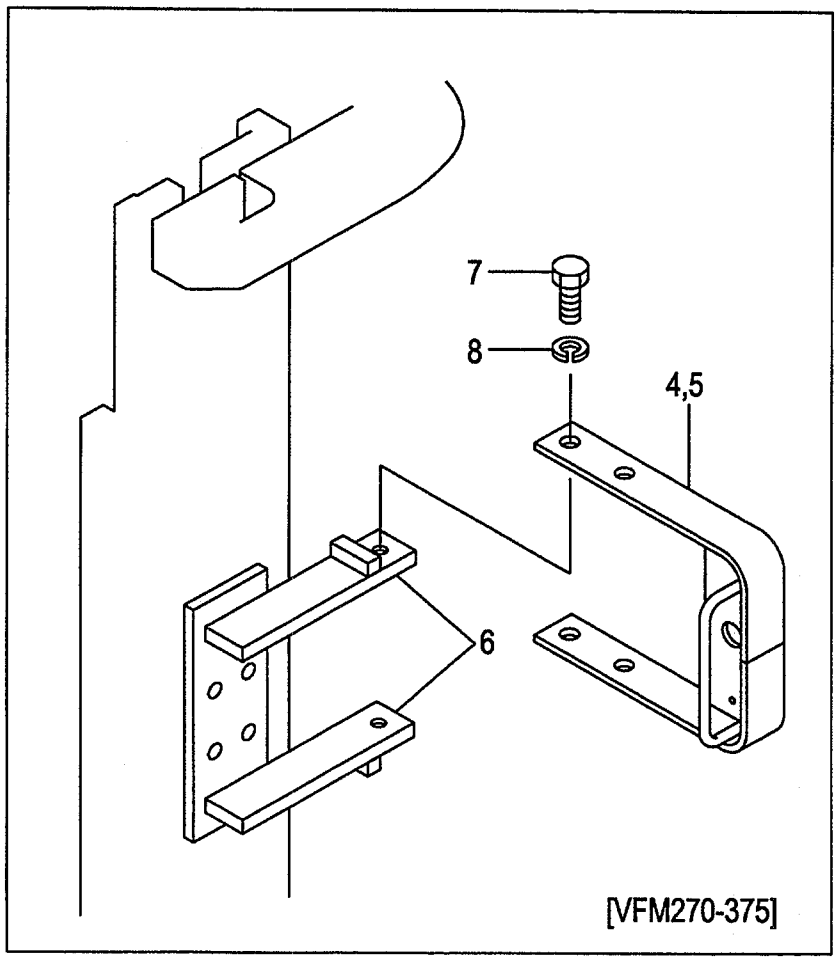

A:AP121F(VFM/J)

Item No	Part No.	Mark	Description		Req'd	Remarks : Serial No.
12	534A9-22301	+	PLATE	ﾌﾟﾚｰﾄ	2	[(AR4,AR5,4AP,5AP,ARD,ARE) /VFM270-375]
-	534A9-22301	+	PLATE	ﾌﾟﾚｰﾄ	2	[(A3R,A4R,A3S,A4S)/VFM270-375]
13	216G2-40602	+	LAMP,HEAD	ﾗﾝﾌﾟ	2	[AR4][AR5][4AP][5AP][ARD] [ARE] INC.14
-	216G2-40602	+	LAMP,HEAD	ﾗﾝﾌﾟ	2	[A3R][A4R][A3S][A4S] INC.14
14	216G2-40611	+	BULB,12V/55W	ﾊﾞﾙﾌﾞ	1	[AR4][AR5][4AP][5AP][ARD] [ARE][A3R][A4R][A3S][A4S]
15	216G2-40701	+	LAMP,COMBI.,FRONT	ﾗﾝﾌﾟ	2	[AR4][AR5][4AP][5AP][ARD] [ARE] INC.16-18
-	216G2-40701	+	LAMP,COMBI.,FRONT	ﾗﾝﾌﾟ	2	[A3R][A4R][A3S][A4S] INC.16-18
16	216G2-40711	+	BULB,TURN SIGNAL	ﾊﾞﾙﾌﾞ	1	[AR4][AR5][4AP][5AP][ARD] [ARE][A3R][A4R][A3S][A4S]
17	216G2-40721	+	BULB,12V/10W	ﾊﾞﾙﾌﾞ	1	[AR4][AR5][4AP][5AP][ARD] [ARE][A3R][A4R][A3S][A4S]
18	216G2-40731	+	LENS	ﾚﾝｽﾞ	1	[AR4][AR5][4AP][5AP][ARD] [ARE][A3R][A4R][A3S][A4S]
19	01183-08016	+	BOLT	ﾎﾞﾙﾄ	4	[(AR4,AR5,4AP,5AP,ARD,ARE) /VFM270-375]
-	01183-08016	+	BOLT	ﾎﾞﾙﾄ	4	[(A3R,A4R,A3S,A4S)/VFM270-375]
20	534A9-22301	+	PLATE	ﾌﾟﾚｰﾄ	2	[(AR4,AR5,4AP,5AP,ARD,ARE) /VFM270-375]
-	534A9-22301	+	PLATE	ﾌﾟﾚｰﾄ	2	[(A3R,A4R,A3S,A4S)/VFM270-375]
21	62469-27001	+	DECAL,CAUTION	ﾃﾞｶﾙ	1	[AR4][AR5][4AP][5AP][ARD] [ARE][A3R][A4R][A3S][A4S]

LAMP BKT.[AP121F/HL]

FIG.146 [AP121F/HL/(4AP,5AP,A3R,A4R,AR4,AR5)]

(A502APH0) ﾗﾝﾌﾟﾌﾞﾗｹｯﾄ

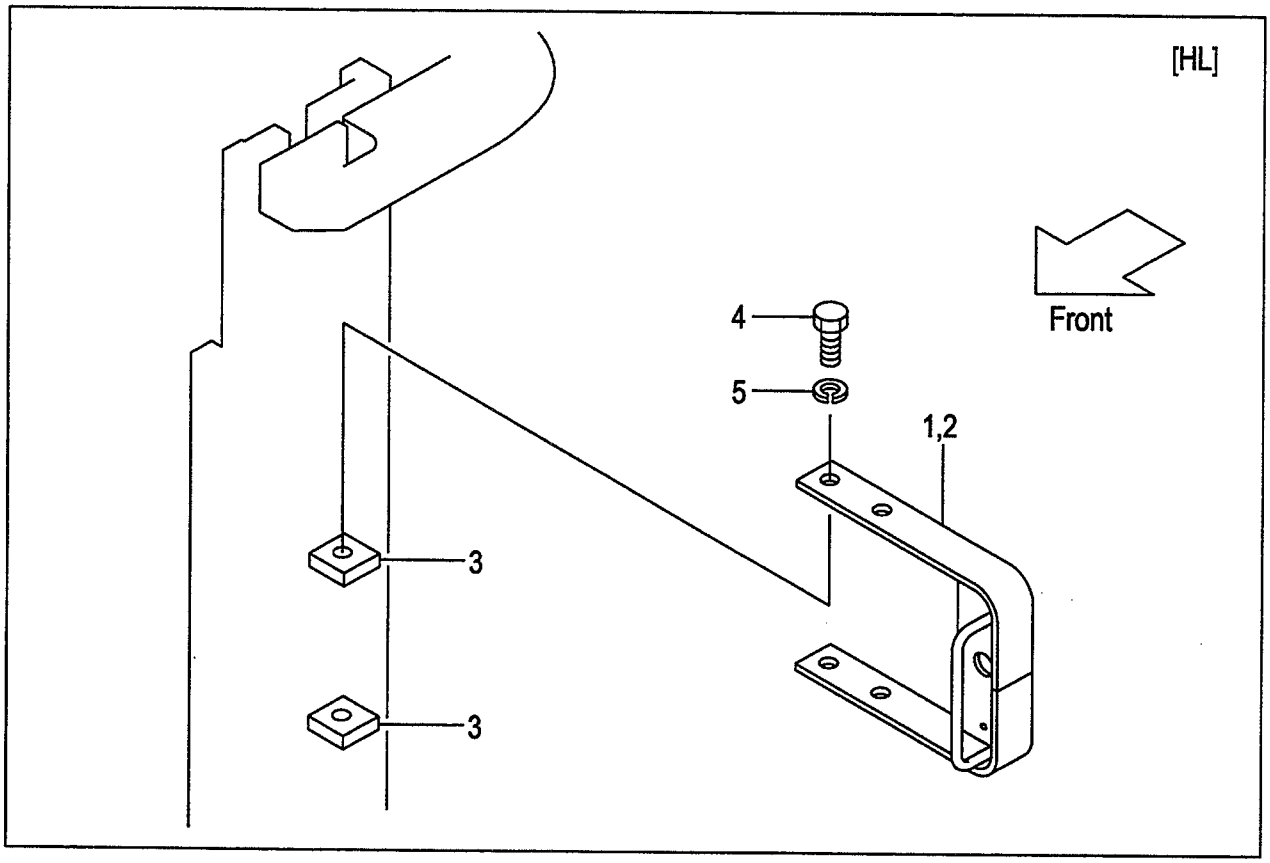

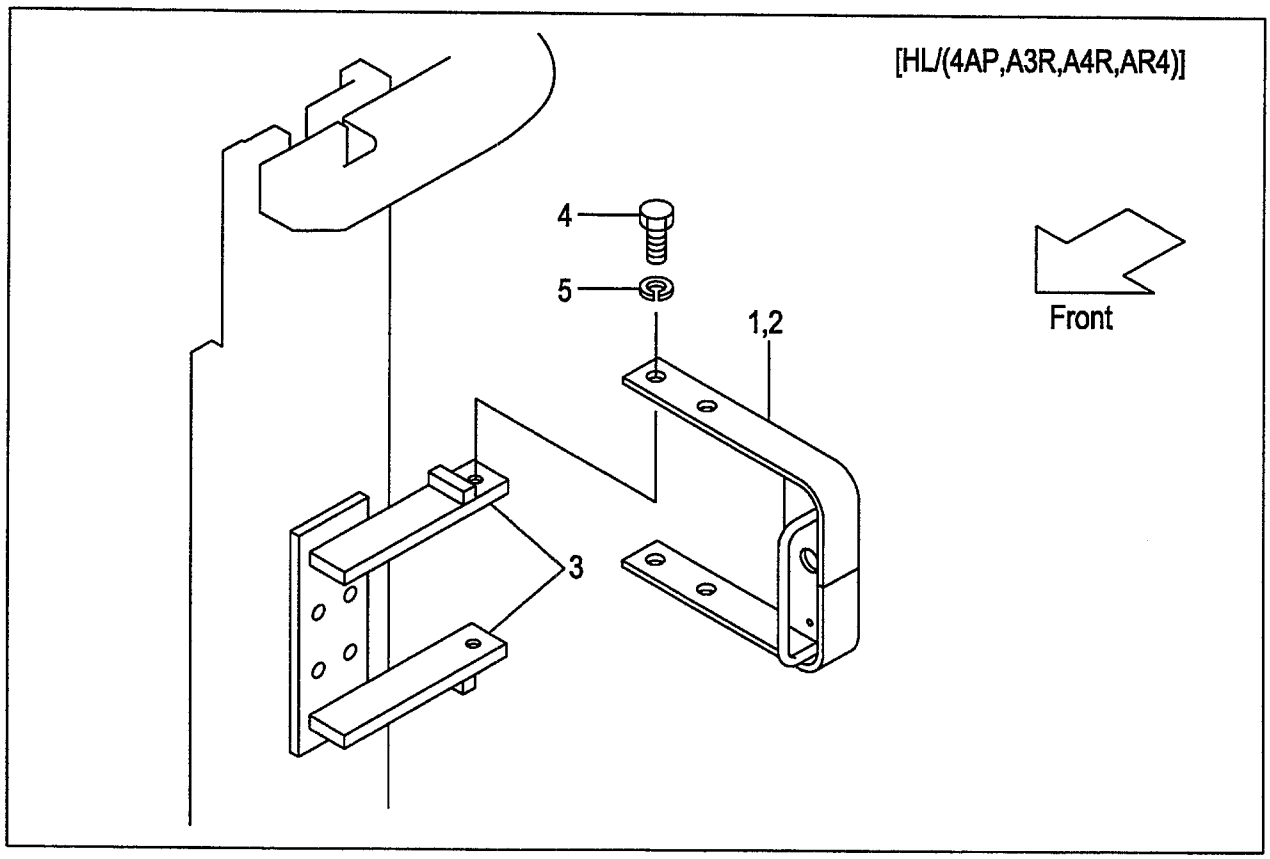

A:AP121F(VFM/J)

Item No	Part No.	Mark	Description		Req'd	Remarks : Serial No.
1	534A9-22001		BRACKET,RH	ﾌﾞﾗｹｯﾄ	1	[HL/VFM250-600]
-	534A9-22001		BRACKET,RH	ﾌﾞﾗｹｯﾄ	1	[HL/ (4AP,5AP,A3R,A4R,AR4,AR5) /VFM250-600]
2	534A9-22011		BRACKET,LH	ﾌﾞﾗｹｯﾄ	1	[HL/VFM250-600]
-	534A9-22011		BRACKET,LH	ﾌﾞﾗｹｯﾄ	1	[HL/ (4AP,5AP,A3R,A4R,AR4,AR5) /VFM250-600]
3	534A9-22101		BRACKET,HL	ﾌﾞﾗｹｯﾄ	4	[HL/VFM250-600]
-	621B0-12641		BRACKET,HL	ﾌﾞﾗｹｯﾄ	4	[HL/ (4AP,5AP,A3R,A4R,AR4,AR5) /VFM250-600]
4	01100-12020		BOLT	ﾎﾞﾙﾄ	4	[HL/VFM250-600]
-	01100-12020		BOLT	ﾎﾞﾙﾄ	4	[HL/ (4AP,5AP,A3R,A4R,AR4,AR5) /VFM250-600]
5	02010-00012		WASHER	ﾜｯｼｬ	4	[HL/VFM250-600]
-	02010-00012		WASHER	ﾜｯｼｬ	4	[HL/ (4AP,5AP,A3R,A4R,AR4,AR5) /VFM250-600]
6	534A9-22201	+	WIRE-HARNESS,HG	ﾜｲﾔﾊｰﾈｽ	2	[HL/VFM250-275]
-	534A9-22201	+	WIRE-HARNESS,HG	ﾜｲﾔﾊｰﾈｽ	2	[HL/ (4AP,5AP,A3R,A4R,AR4,AR5) /VFM250-300]
-	534A9-22211	+	WIRE-HARNESS,HG	ﾜｲﾔﾊｰﾈｽ	2	[HL/VFM300-600]
-	534A9-22211	+	WIRE-HARNESS,HG	ﾜｲﾔﾊｰﾈｽ	2	[HL/ (4AP,5AP,A3R,A4R,AR4,AR5) /VFM325-600]
7	27732-42221	+	CLAMP	ｸﾗﾝﾌﾟ	2	[HL/VFM250-600]
-	27732-42221	+	CLAMP	ｸﾗﾝﾌﾟ	2	[HL/ (4AP,5AP,A3R,A4R,AR4,AR5) /VFM250-600]
8	04913-11380	+	BAND	ﾊﾞﾝﾄﾞ	4	[HL/VFM250-600]
-	04913-11380	+	BAND	ﾊﾞﾝﾄﾞ	4	[HL/ (4AP,5AP,A3R,A4R,AR4,AR5) /VFM250-300]
-	04913-11380	+	BAND	ﾊﾞﾝﾄﾞ	6	[HL/ (4AP,5AP,A3R,A4R,AR4,AR5) /VFM325-600]
9	534A9-22301	+	PLATE	ﾌﾟﾚｰﾄ	2	[HL/VFM250-600]
-	534A9-22301	+	PLATE	ﾌﾟﾚｰﾄ	2	[HL/ (4AP,5AP,A3R,A4R,AR4,AR5) /VFM250-600]
10	216G2-40602	+	LAMP,HEAD	ﾗﾝﾌﾟ	2	[HL/VFM250-600] INC.11
-	216G2-40602	+	LAMP,HEAD	ﾗﾝﾌﾟ	2	[HL/(4AP,5AP) /VFM250-600] INC.11
-	216G2-40602	+	LAMP,HEAD	ﾗﾝﾌﾟ	2	[HL/(A3R,A4R,AR4,AR5) /VFM250-600] INC.11
11	216G2-40611	+	BULB,12V/55W	ﾊﾞﾙﾌﾞ	1	[HL/VFM250-600]

LAMP BKT.[AP121F/HL]

FIG.146 [AP121F/HL/(4AP,5AP,A3R,A4R,AR4,AR5)]

(A502APH0) ﾗﾝﾌﾟﾌﾞﾗｹｯﾄ

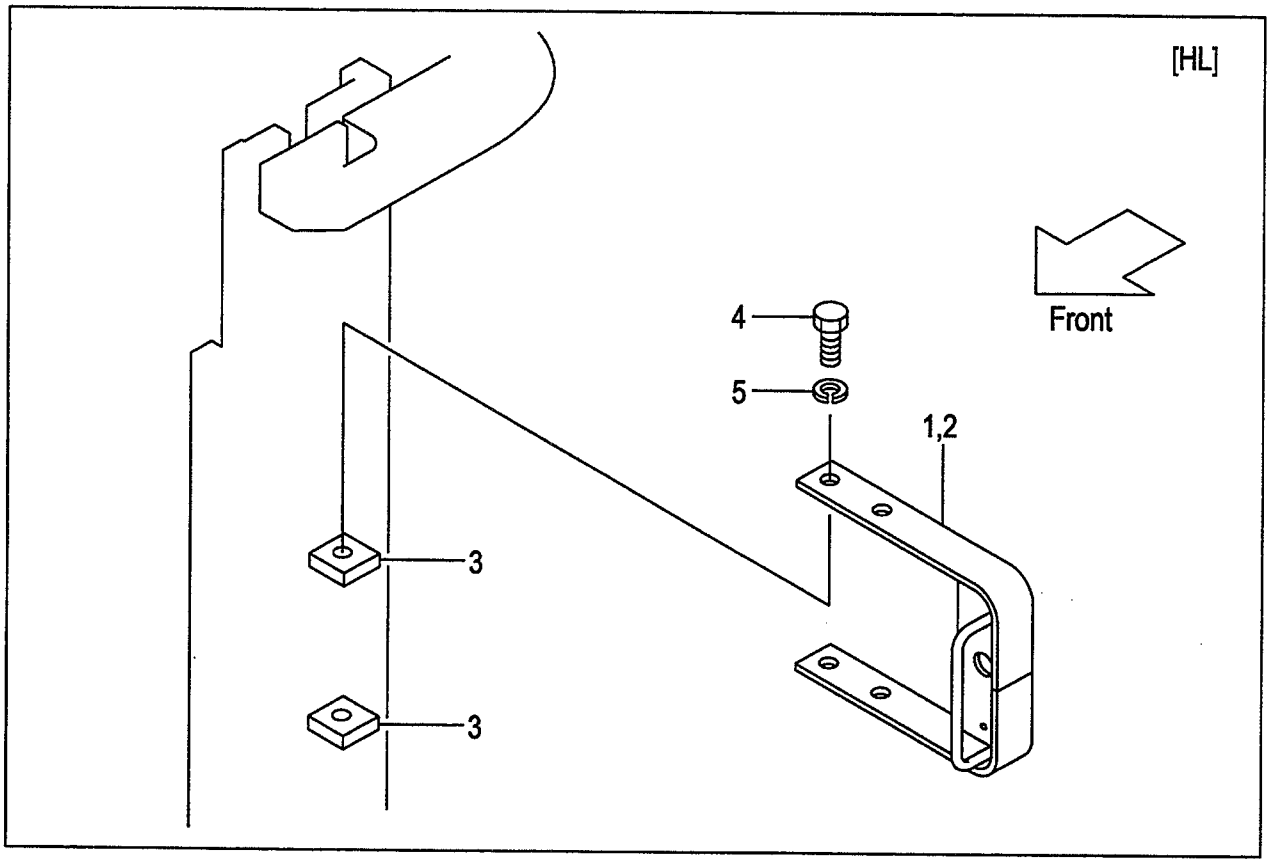

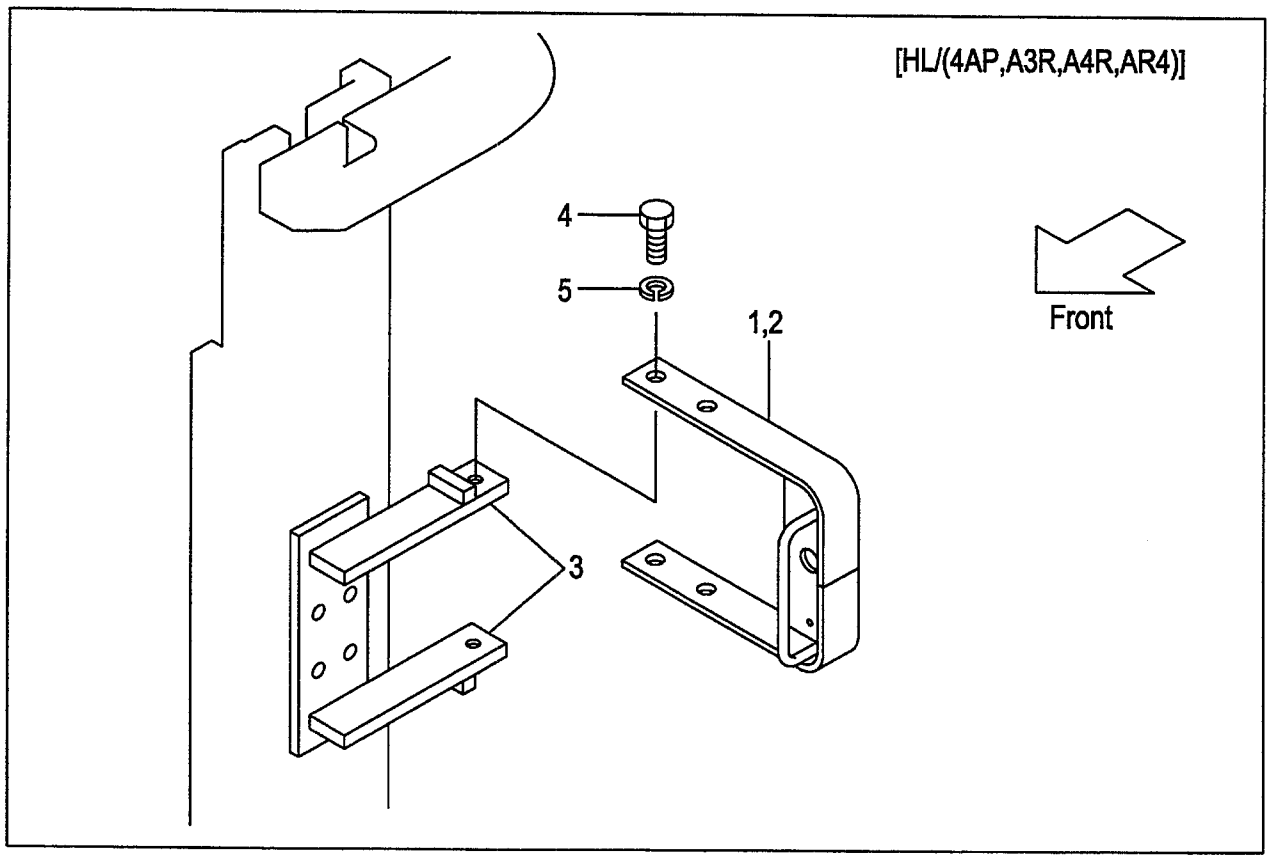

A:AP121F(VFM/J)

Item No	Part No.	Mark	Description		Req'd	Remarks : Serial No.
-	216G2-40611	+	BULB,12V/55W	ﾊﾞﾙﾌﾞ	1	[HL/ (4AP,5AP,A3R,A4R,AR4,AR5) /VFM250-600]
12	216G2-40701	+	LAMP,COMBI.,FRONT	ﾗﾝﾌﾟ	2	[HL/VFM250-600] INC.13-15
-	216G2-40701	+	LAMP,COMBI.,FRONT	ﾗﾝﾌﾟ	2	[HL/(4AP,5AP) /VFM250-600] INC.13-15
-	216G2-40701	+	LAMP,COMBI.,FRONT	ﾗﾝﾌﾟ	2	[HL/(A3R,A4R,AR4,AR5) /VFM250-600] INC.13-15
13	216G2-40711	+	BULB,TURN SIGNAL	ﾊﾞﾙﾌﾞ	1	[HL/VFM250-600]
-	216G2-40711	+	BULB,TURN SIGNAL	ﾊﾞﾙﾌﾞ	1	[HL/ (4AP,5AP,A3R,A4R,AR4,AR5) /VFM250-600]
14	216G2-40721	+	BULB,12V/10W	ﾊﾞﾙﾌﾞ	1	[HL/VFM250-600]
-	216G2-40721	+	BULB,12V/10W	ﾊﾞﾙﾌﾞ	1	[HL/ (4AP,5AP,A3R,A4R,AR4,AR5) /VFM250-600]
15	216G2-40731	+	LENS	ﾚﾝｽﾞ	1	[HL/VFM250-600]
-	216G2-40731	+	LENS	ﾚﾝｽﾞ	1	[HL/ (4AP,5AP,A3R,A4R,AR4,AR5) /VFM250-600]
16	01183-08016	+	BOLT & WASHER	ﾎﾞﾙﾄ&ﾜｯｼｬ	4	[HL/VFM250-600]
-	01183-08016	+	BOLT & WASHER	ﾎﾞﾙﾄ&ﾜｯｼｬ	4	[HL/ (4AP,5AP,A3R,A4R,AR4,AR5) /VFM250-600]
17	62469-27001	+	DECAL,CAUTION	ﾃﾞｶﾙ	1	[HL/ (4AP,5AP,A3R,A4R,AR4,AR5)]
K1	BS-51502-08610		KIT,SEAL,REEL	ﾘｰﾙｼｰﾙｷｯﾄ	2	[HL][HL/ (4AP,5AP,A3R,A4R,AR4,AR5)]

LAMP BKT.[AP121F/BKH]

FIG.147 [AP121F/BKH/(4AP,5AP,A3R,A4R,AR4,AR5)]

(A502APJ0) ﾗﾝﾌﾟﾌﾞﾗｹｯﾄ

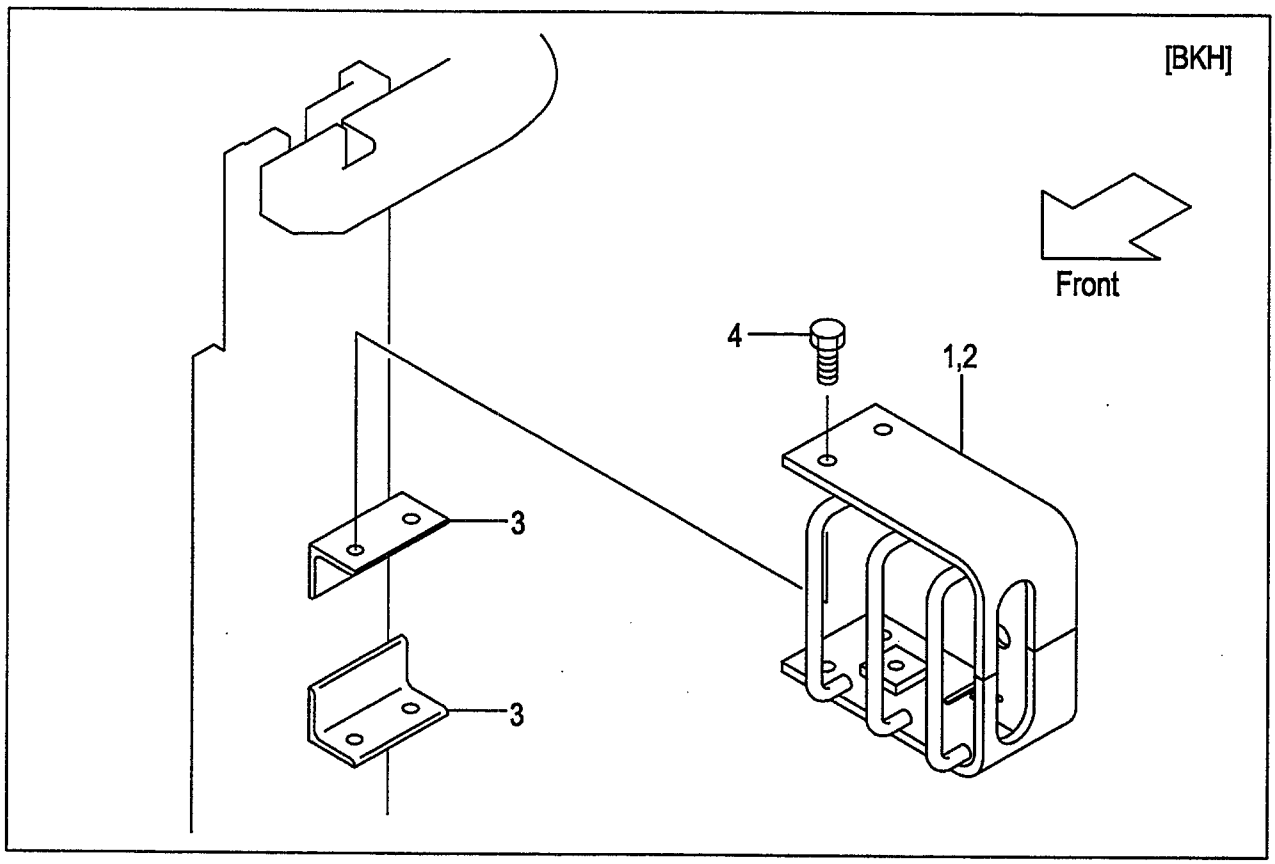

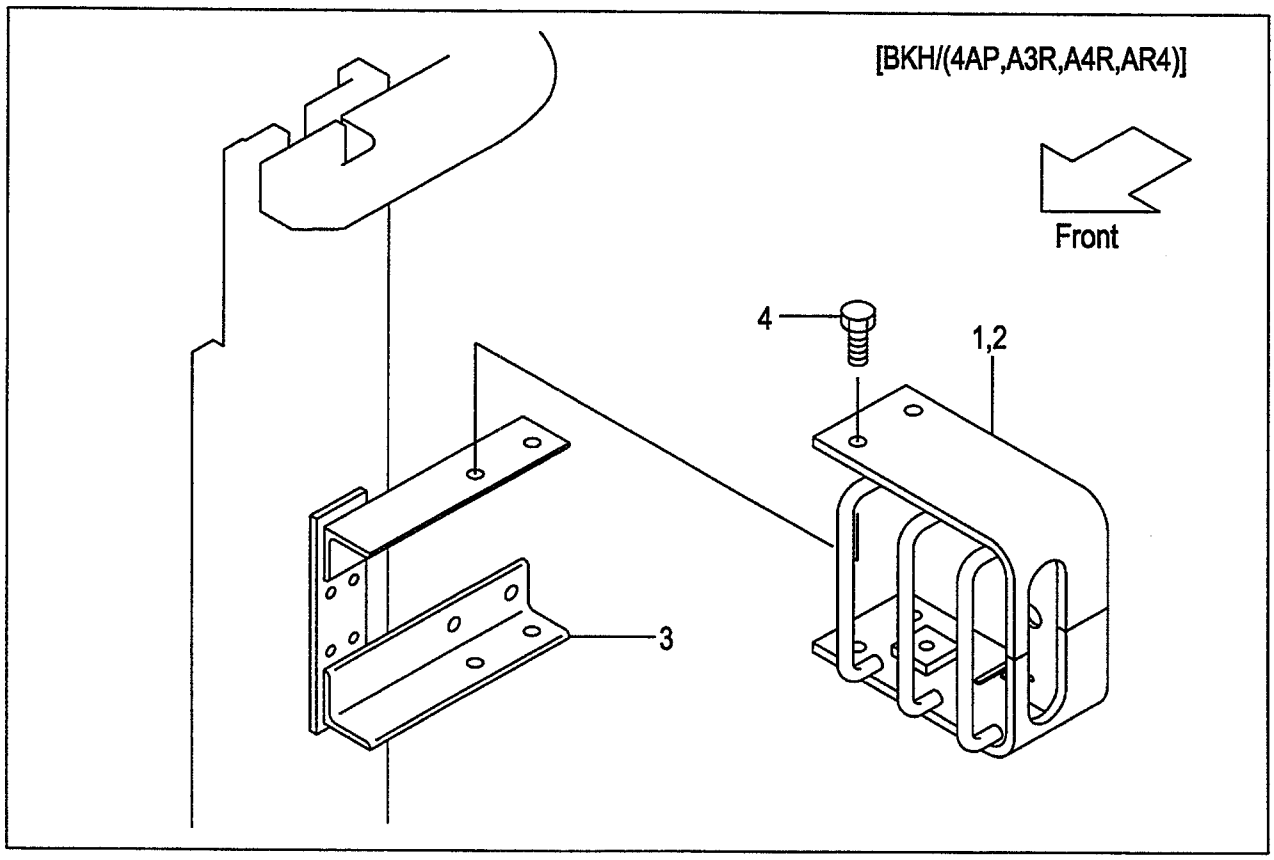

A:AP121F(VFM/J)

Item No	Part No.	Mark	Description		Req'd	Remarks : Serial No.
1	534A4-22001		GUARD,RH	ｶﾞｰﾄﾞ	1	[BKH/VFM250-600]
-	534A4-22001		GUARD,RH	ｶﾞｰﾄﾞ	1	[BKH/ (4AP,5AP,A3R,A4R,AR4,AR5) /VFM250-600]
2	534A4-22011		GUARD,LH	ｶﾞｰﾄﾞ	1	[BKH/VFM250-600]
-	534A4-22011		GUARD,LH	ｶﾞｰﾄﾞ	1	[BKH/ (4AP,5AP,A3R,A4R,AR4,AR5) /VFM250-600]
3	534A4-22101		BRACKET,BKH	ﾌﾞﾗｹｯﾄ	4	[BKH/VFM250-600]
-	621B0-12651		BRACKET,BKH	ﾌﾞﾗｹｯﾄ	4	[BKH/ (4AP,5AP,A3R,A4R,AR4,AR5) /VFM250-600]
4	01184-12020		BOLT	ﾎﾞﾙﾄ	8	[BKH/VFM250-600]
-	01184-12020		BOLT	ﾎﾞﾙﾄ	8	[BKH/ (4AP,5AP,A3R,A4R,AR4,AR5) /VFM250-600]
5	534A9-22201	+	WIRE-HARNESS,HG	ﾜｲﾔﾊｰﾈｽ	2	[BKH/VFM250-275]
-	534A9-22201	+	WIRE-HARNESS,HG	ﾜｲﾔﾊｰﾈｽ	2	[BKH/ (4AP,5AP,A3R,A4R,AR4,AR5) /VFM250-300]
-	534A9-22211	+	WIRE-HARNESS,HG	ﾜｲﾔﾊｰﾈｽ	2	[BKH/VFM300-600]
-	534A9-22211	+	WIRE-HARNESS,HG	ﾜｲﾔﾊｰﾈｽ	2	[BKH/ (4AP,5AP,A3R,A4R,AR4,AR5) /VFM325-600]
6	27732-42221	+	CLAMP	ｸﾗﾝﾌﾟ	2	[BKH/VFM250-600]
-	27732-42221	+	CLAMP	ｸﾗﾝﾌﾟ	2	[BKH/ (4AP,5AP,A3R,A4R,AR4,AR5) /VFM250-600]
7	04913-11380	+	BAND	ﾊﾞﾝﾄﾞ	4	[BKH/VFM250-600]
-	04913-11380	+	BAND	ﾊﾞﾝﾄﾞ	4	[BKH/ (4AP,5AP,A3R,A4R,AR4,AR5) /VFM250-300]
-	04913-11380	+	BAND	ﾊﾞﾝﾄﾞ	6	[BKH/ (4AP,5AP,A3R,A4R,AR4,AR5) /VFM325-600]
8	534A9-22301	+	PLATE	ﾌﾟﾚｰﾄ	2	[BKH/VFM250-600]
-	534A9-22301	+	PLATE	ﾌﾟﾚｰﾄ	2	[BKH/ (4AP,5AP,A3R,A4R,AR4,AR5) /VFM250-600]
9	216G2-40602	+	LAMP,HEAD	ﾗﾝﾌﾟ	2	[BKH/VFM250-600] INC.10
-	216G2-40602	+	LAMP,HEAD	ﾗﾝﾌﾟ	2	[BKH/(4AP,5AP) /VFM250-600] INC.10
-	216G2-40602	+	LAMP,HEAD	ﾗﾝﾌﾟ	2	[BKH/(A3R,A4R,AR4,AR5) /VFM250-600] INC.10
10	216G2-40611	+	BULB,12V/55W	ﾊﾞﾙﾌﾞ	1	[BKH/VFM250-600]
-	216G2-40611	+	BULB,12V/55W	ﾊﾞﾙﾌﾞ	1	[BKH/ (4AP,5AP,A3R,A4R,AR4,AR5) /VFM250-600]
11	216G2-40701	+	LAMP,COMBI.,FRONT	ﾗﾝﾌﾟ	2	[BKH/VFM250-600] INC.12-14

LAMP BKT.[AP121F/BKH]

FIG.147 [AP121F/BKH/(4AP,5AP,A3R,A4R,AR4,AR5)]

(A502APJ0) ﾗﾝﾌﾟﾌﾞﾗｹｯﾄ

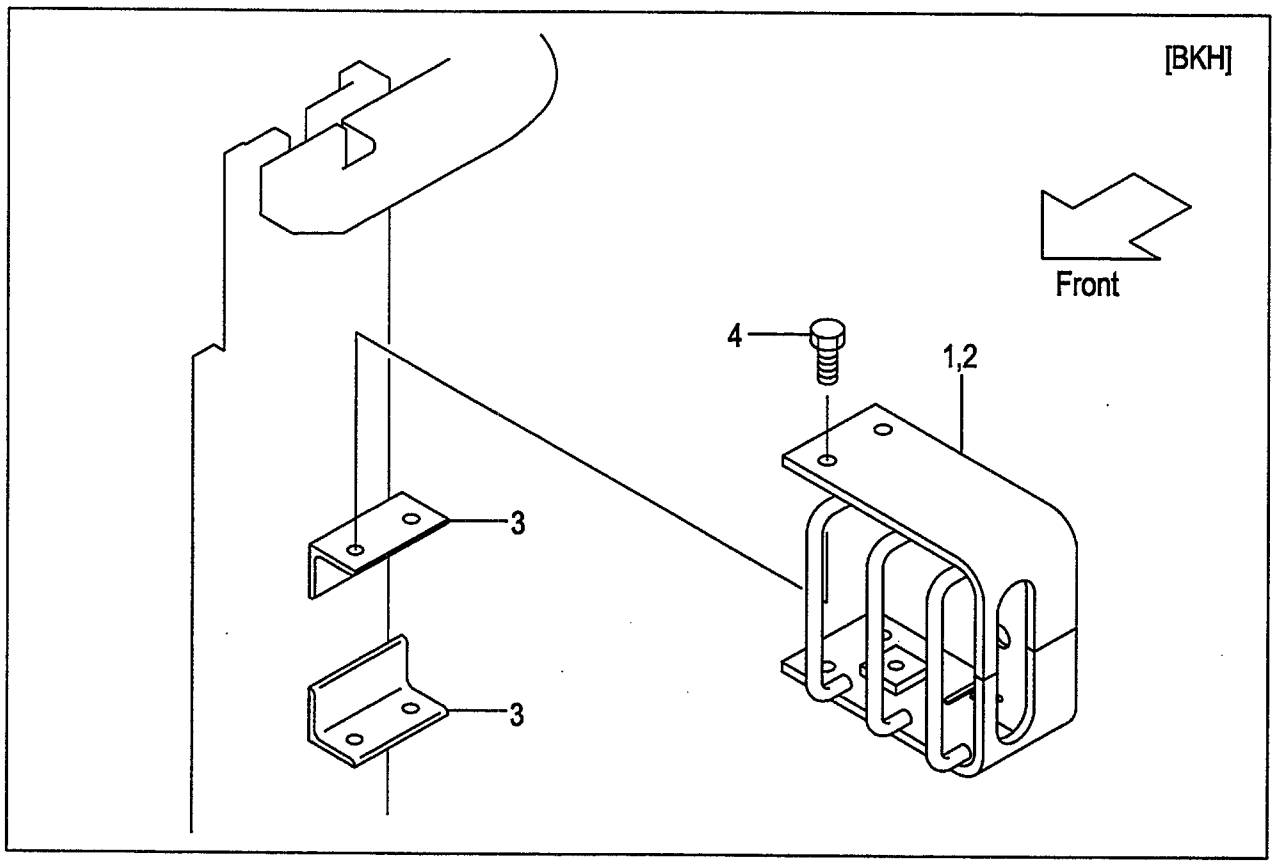

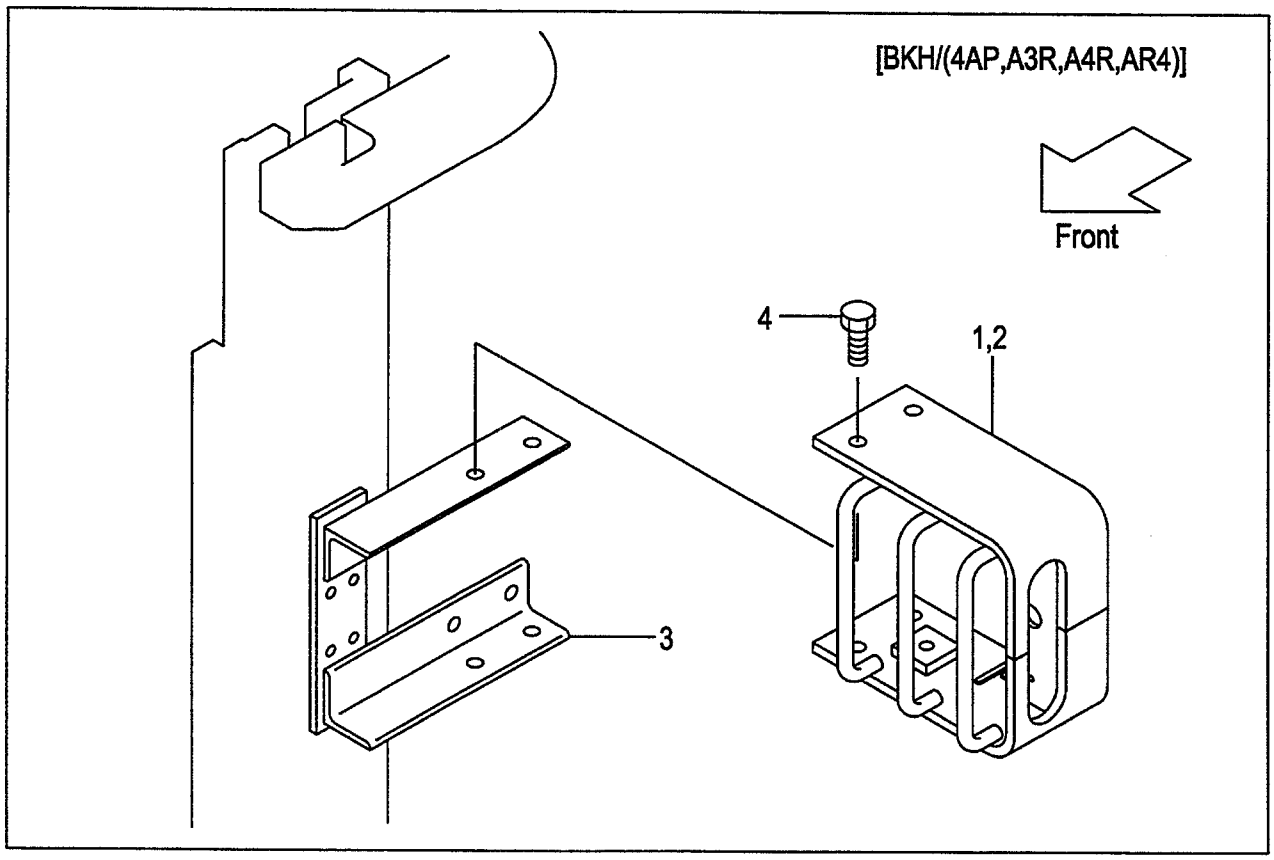

A:AP121F(VFM/J)

Item No	Part No.	Mark	Description		Req'd	Remarks : Serial No.
-	216G2-40701	+	LAMP,COMBI.,FRONT	ﾗﾝﾌﾟ	2	[BKH/(4AP,5AP) /VFM250-600] INC.12-14
-	216G2-40701	+	LAMP,COMBI.,FRONT	ﾗﾝﾌﾟ	2	[BKH/(A3R,A4R,AR4,AR5) /VFM250-600] INC.12-14
12	216G2-40711	+	BULB,TURN SIGNAL	ﾊﾞﾙﾌﾞ	1	[BKH/VFM250-600]
-	216G2-40711	+	BULB,TURN SIGNAL	ﾊﾞﾙﾌﾞ	1	[BKH/ (4AP,5AP,A3R,A4R,AR4,AR5) /VFM250-600]
13	216G2-40721	+	BULB,12V/10W	ﾊﾞﾙﾌﾞ	1	[BKH/VFM250-600]
-	216G2-40721	+	BULB,12V/10W	ﾊﾞﾙﾌﾞ	1	[BKH/ (4AP,5AP,A3R,A4R,AR4,AR5) /VFM250-600]
14	216G2-40731	+	LENS	ﾚﾝｽﾞ	1	[BKH/VFM250-600]
-	216G2-40731	+	LENS	ﾚﾝｽﾞ	1	[BKH/ (4AP,5AP,A3R,A4R,AR4,AR5) /VFM250-600]
15	01183-08016	+	BOLT & WASHER	ﾎﾞﾙﾄ&ﾜｯｼｬ	4	[BKH/VFM250-600]
-	01183-08016	+	BOLT & WASHER	ﾎﾞﾙﾄ&ﾜｯｼｬ	4	[BKH/ (4AP,5AP,A3R,A4R,AR4,AR5) /VFM250-600]
16	62469-27001	+	DECAL,CAUTION	ﾃﾞｶﾙ	1	[BKH/ (4AP,5AP,A3R,A4R,AR4,AR5)]

LAMP BKT.[AP121F/HLG]

FIG.148 [AP121F/HLG/(4AP,5AP,A3R,A4R,AR4,AR5)]

(A502APK0) ﾗﾝﾌﾟﾌﾞﾗｹｯﾄ

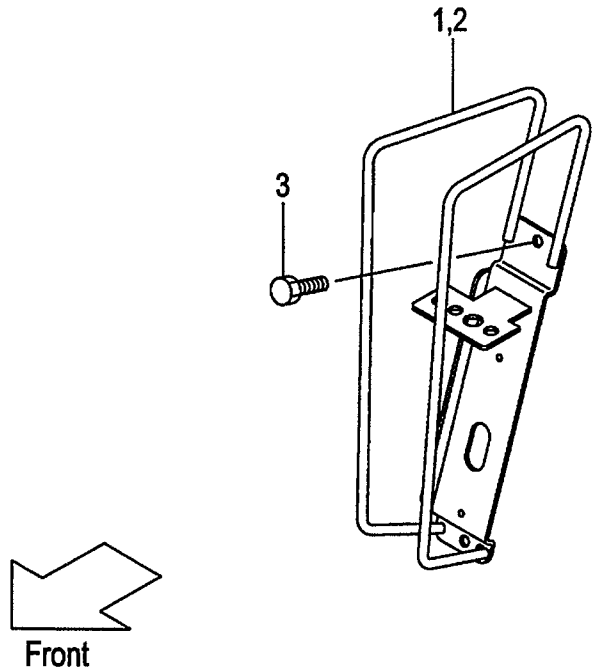

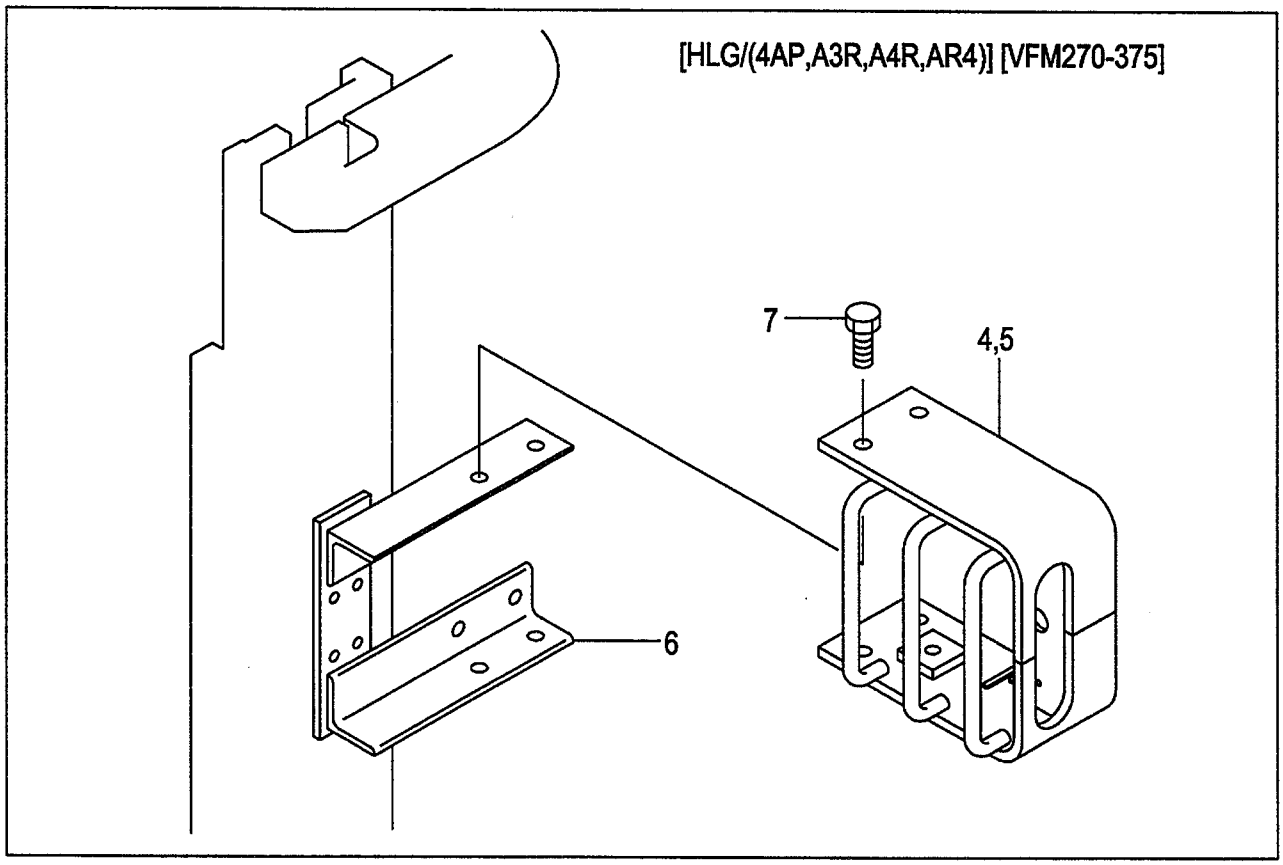

A:AP121F(VFM/J)

Item No	Part No.	Mark	Description		Req'd	Remarks : Serial No.
1	539A5-12041		GUARD,LAMP,RH	ｶﾞｰﾄﾞ	1	[HLG]
-	539A5-12041		GUARD,LAMP,RH	ｶﾞｰﾄﾞ	1	[HLG/(4AP,5AP) /(VFM200-250,400-600)]
-	539A5-12041		GUARD,LAMP,RH	ｶﾞｰﾄﾞ	1	[HLG/(A3R,A4R,AR4,AR5) /(VFM200-250,400-600)]
2	539A5-12011		GUARD,LAMP,LH	ｶﾞｰﾄﾞ	1	[HLG]
-	539A5-12011		GUARD,LAMP,LH	ｶﾞｰﾄﾞ	1	[HLG/(4AP,5AP) /(VFM200-250,400-600)]
-	539A5-12011		GUARD,LAMP,LH	ｶﾞｰﾄﾞ	1	[HLG/(A3R,A4R,AR4,AR5) /(VFM200-250,400-600)]
3	01183-08016		BOLT & WASHER	ﾎﾞﾙﾄ&ﾜｯｼｬ	4	[HLG]
-	01183-08016		BOLT & WASHER	ﾎﾞﾙﾄ&ﾜｯｼｬ	4	[HLG/(4AP,5AP) /(VFM200-250,400-600)]
-	01183-08016		BOLT & WASHER	ﾎﾞﾙﾄ&ﾜｯｼｬ	4	[HLG/(A3R,A4R,AR4,AR5) /(VFM200-250,400-600)]
4	534A4-22001		GUARD,RH	ｶﾞｰﾄﾞ	1	[HLG/ (4AP,5AP,A3R,A4R,AR4,AR5) /VFM270-375]
5	534A4-22011		GUARD,LH	ｶﾞｰﾄﾞ	1	[HLG/ (4AP,5AP,A3R,A4R,AR4,AR5) /VFM270-375]
6	621B0-12651		BRACKET,BKH	ﾌﾞﾗｹｯﾄ	4	[HLG/ (4AP,5AP,A3R,A4R,AR4,AR5) /VFM270-375]
7	01184-12020		BOLT	ﾎﾞﾙﾄ	8	[HLG/ (4AP,5AP,A3R,A4R,AR4,AR5) /VFM270-375]
8	239A2-42221	+	WIRE-HARNESS,HG	ﾜｲﾔﾊｰﾈｽ	2	[HLG]
-	239A2-42221	+	WIRE-HARNESS,HG	ﾜｲﾔﾊｰﾈｽ	2	[HLG/(4AP,5AP) /(VFM200-250,400-600)]
-	239A2-42221	+	WIRE-HARNESS,HG	ﾜｲﾔﾊｰﾈｽ	2	[HLG/(A3R,A4R,AR4,AR5) /(VFM200-250,400-600)]
-	534A9-22201	+	WIRE-HARNESS,HG	ﾜｲﾔﾊｰﾈｽ	2	[HLG/ (4AP,5AP,A3R,A4R,AR4,AR5) /VFM270-300]
-	534A9-22211	+	WIRE-HARNESS,HG	ﾜｲﾔﾊｰﾈｽ	2	[HLG/ (4AP,5AP,A3R,A4R,AR4,AR5) /VFM325-375]
9	27732-42221	+	CLAMP	ｸﾗﾝﾌﾟ	2	[HLG/ (4AP,5AP,A3R,A4R,AR4,AR5) /VFM270-375]
10	04913-11100	+	BAND	ﾊﾞﾝﾄﾞ	2	[HLG]
-	04913-11100	+	BAND	ﾊﾞﾝﾄﾞ	2	[HLG/(4AP,5AP) /(VFM200-250,400-600)]
-	04913-11100	+	BAND	ﾊﾞﾝﾄﾞ	2	[HLG/(A3R,A4R,AR4,AR5) /(VFM200-250,400-600)]
-	04913-11380	+	BAND	ﾊﾞﾝﾄﾞ	4	[HLG/ (4AP,5AP,A3R,A4R,AR4,AR5) /VFM270-375]

LAMP BKT.[AP121F/HLG]

FIG.148 [AP121F/HLG/(4AP,5AP,A3R,A4R,AR4,AR5)]

(A502APK0) ﾗﾝﾌﾟﾌﾞﾗｹｯﾄ

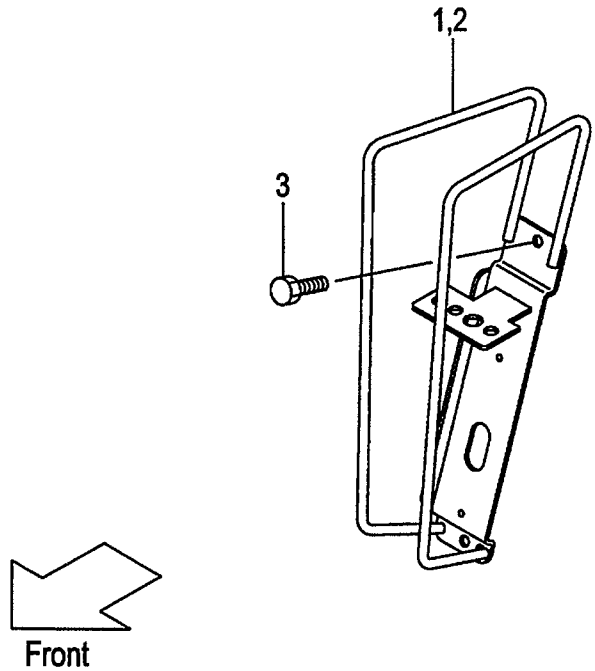

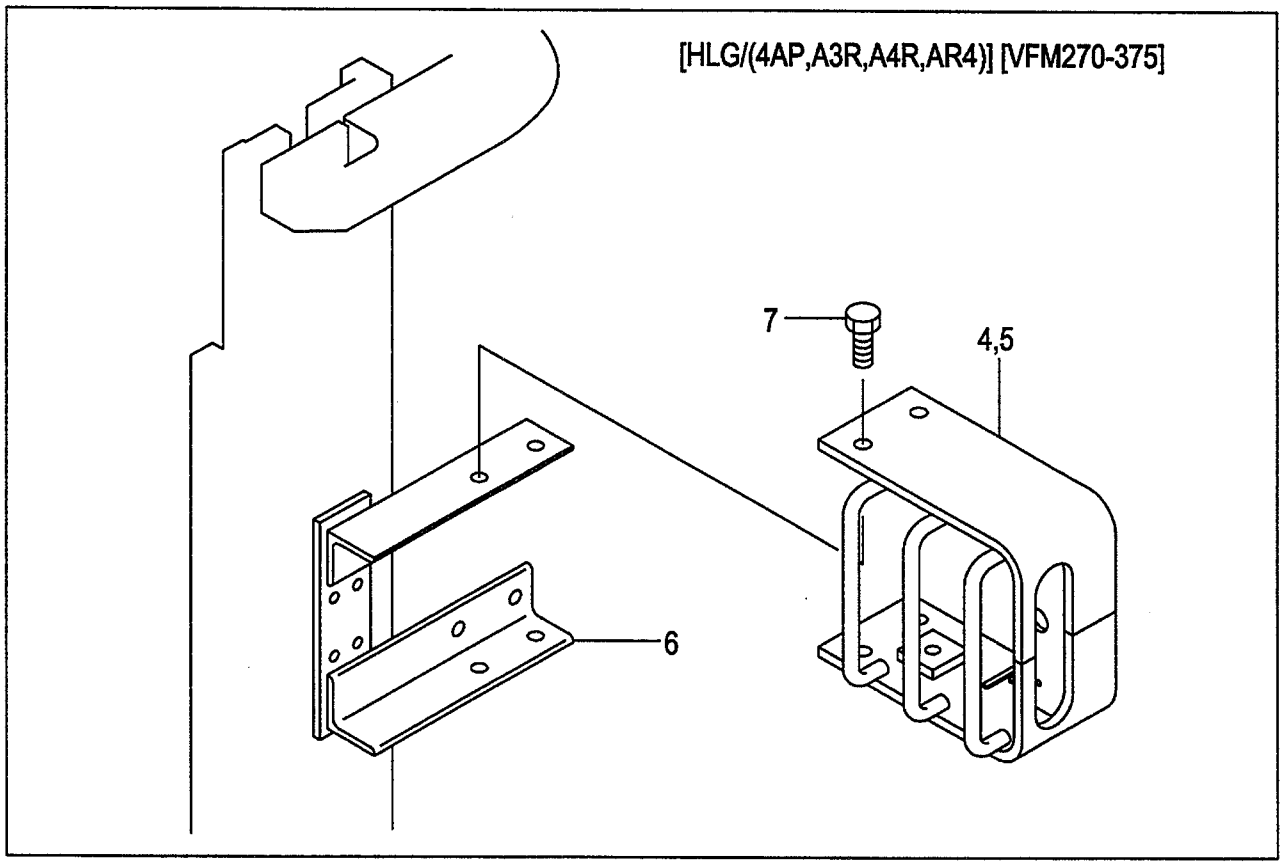

A:AP121F(VFM/J)

Item No	Part No.	Mark	Description		Req'd	Remarks : Serial No.
11	534A9-22301	+	PLATE	ﾌﾟﾚｰﾄ	2	[HLG/ (4AP,5AP,A3R,A4R,AR4,AR5) /VFM270-375]
12	216G2-40602	+	LAMP,HEAD	ﾗﾝﾌﾟ	2	[HLG] INC.13
-	216G2-40602	+	LAMP,HEAD	ﾗﾝﾌﾟ	2	[HLG/ (4AP,5AP,A3R,A4R,AR4,AR5)] INC.13
13	216G2-40611	+	BULB,12V/55W	ﾊﾞﾙﾌﾞ	1	[HLG]
-	216G2-40611	+	BULB,12V/55W	ﾊﾞﾙﾌﾞ	1	[HLG/ (4AP,5AP,A3R,A4R,AR4,AR5)]
14	216G2-40701	+	LAMP,COMBI.,FRONT	ﾗﾝﾌﾟ	2	[HLG] INC.15-17
-	216G2-40701	+	LAMP,COMBI.,FRONT	ﾗﾝﾌﾟ	2	[HLG/ (4AP,5AP,A3R,A4R,AR4,AR5)] INC.15-17
15	216G2-40711	+	BULB,TURN SIGNAL	ﾊﾞﾙﾌﾞ	1	[HLG]
-	216G2-40711	+	BULB,TURN SIGNAL	ﾊﾞﾙﾌﾞ	1	[HLG/ (4AP,5AP,A3R,A4R,AR4,AR5)]
16	216G2-40721	+	BULB,12V/10W	ﾊﾞﾙﾌﾞ	1	[HLG]
-	216G2-40721	+	BULB,12V/10W	ﾊﾞﾙﾌﾞ	1	[HLG/ (4AP,5AP,A3R,A4R,AR4,AR5)]
17	216G2-40731	+	LENS	ﾚﾝｽﾞ	1	[HLG]
-	216G2-40731	+	LENS	ﾚﾝｽﾞ	1	[HLG/ (4AP,5AP,A3R,A4R,AR4,AR5)]
18	01183-08016	+	BOLT & WASHER	ﾎﾞﾙﾄ&ﾜｯｼｬ	4	[HLG/ (4AP,5AP,A3R,A4R,AR4,AR5) /VFM270-375]
19	62469-27001	+	DECAL,CAUTION	ﾃﾞｶﾙ	1	[HLG/ (4AP,5AP,A3R,A4R,AR4,AR5)]

FIG.149 HYDRAULIC LINE (CONTROL VALVE-CONNECTOR)

(A502APL0) ﾊｲﾄﾞﾛﾘｯｸﾗｲﾝ (ｺﾝﾄﾛｰﾙﾊﾞﾙﾌﾞ-ｺﾈｸﾀ)

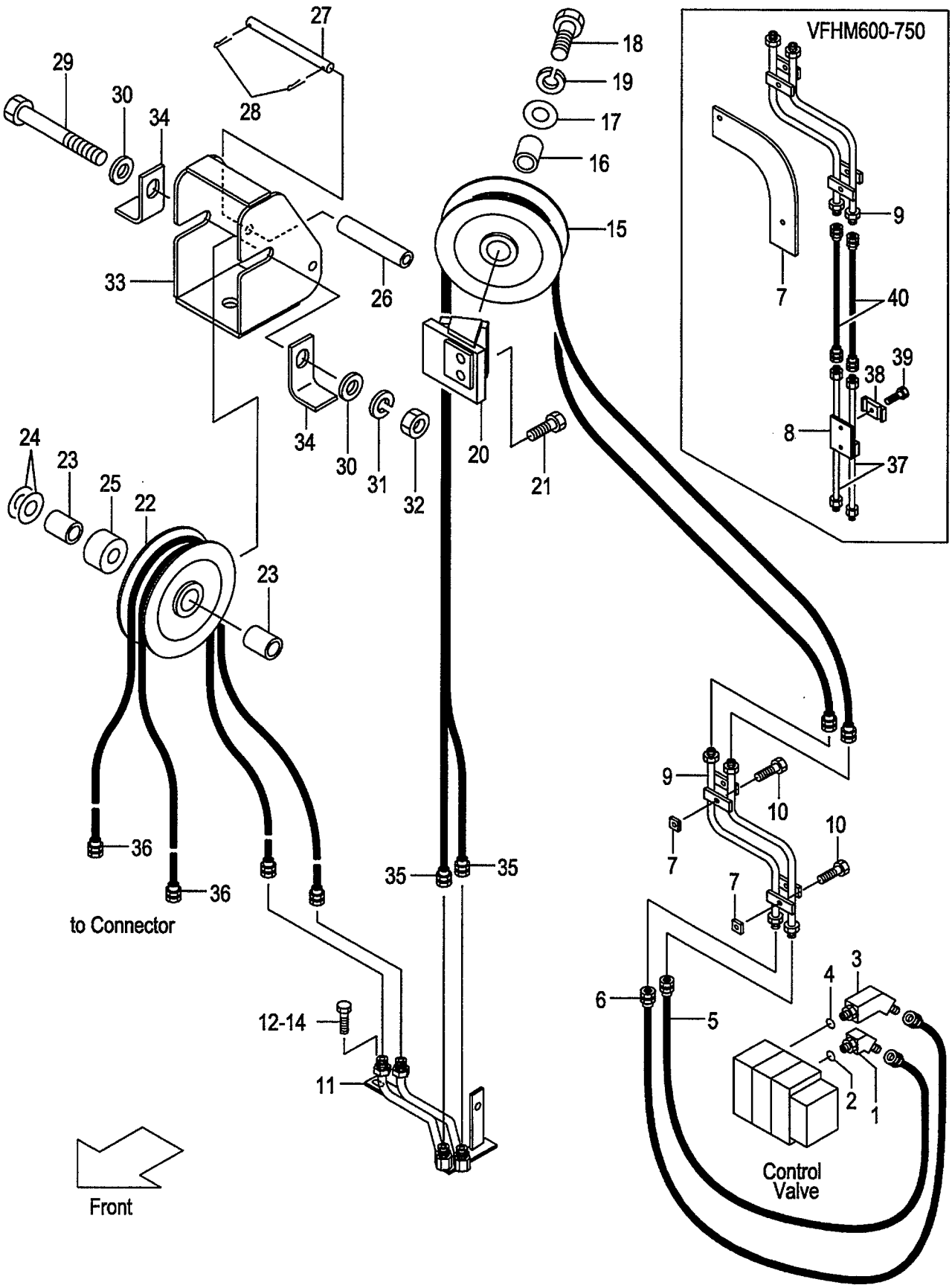

A:AP221F(VFHM/J)

Item No	Part No.	Mark	Description		Req'd	Remarks : Serial No.
A1	NO PART NO.	#	ELBOW-ASSY	ｴﾙﾎﾞｱｯｾﾝ	1	INC.1,2
1	63130-12071		ELBOW	ｴﾙﾎﾞ	1	
2	03320-00140		O-RING	Oﾘﾝｸﾞ	1	
A2	NO PART NO.	#	ELBOW-ASSY	ｴﾙﾎﾞｱｯｾﾝ	1	INC.3,4
3	62160-10011		ELBOW	ｴﾙﾎﾞ	1	
4	03320-00140		O-RING	Oﾘﾝｸﾞ	1	
5	62160-12302		HOSE	ﾎｰｽ	1	
6	62160-12312		HOSE	ﾎｰｽ	1	
7	62150-12981		BLOCK,TAPPED	ﾌﾞﾛｯｸ	2	[VFHM360-550]
-	63170-12161		BRACKET	ﾌﾞﾗｹｯﾄ	1	[VFHM600-750]
8	63680-12401		BRACKET	ﾌﾞﾗｹｯﾄ	1	[VFHM600-750]
9	62170-12311		PIPE	ﾊﾟｲﾌﾟ	1	
10	01183-08016		BOLT	ﾎﾞﾙﾄ	2	
11	63170-12002		PIPE	ﾊﾟｲﾌﾟ	1	
12	01183-08020		BOLT	ﾎﾞﾙﾄ	1	
13	01100-10016		BOLT	ﾎﾞﾙﾄ	1	
14	02010-00010		WASHER	ﾜｯｼｬ	1	
15	62170-12731		PULLEY	ﾌﾟｰﾘ	1	
16	62170-12651		COLLAR	ｶﾗｰ	1	
17	23917-42191		SHIM	ｼﾑ	2	
18	01100-16050		BOLT	ﾎﾞﾙﾄ	1	
19	02010-00016		WASHER	ﾜｯｼｬ	1	
20	63170-12101		BRACKET	ﾌﾞﾗｹｯﾄ	1	
21	01184-10030		BOLT	ﾎﾞﾙﾄ	2	
22	62170-12731		PULLEY	ﾌﾟｰﾘ	1	
23	62170-12651		COLLAR	ｶﾗｰ	2	
24	23917-42191		SHIM	ｼﾑ	2	
25	62170-12671		SPACER	ｽﾍﾟｰｻ	1	
26	62170-12711		COLLAR	ｶﾗｰ	1	
27	62170-12701		PIN	ﾋﾟﾝ	1	
28	02200-32020		PIN	ﾋﾟﾝ	2	
29	01100-16140		BOLT	ﾎﾞﾙﾄ	1	
30	02000-00016		WASHER	ﾜｯｼｬ	2	
31	02010-00016		WASHER	ﾜｯｼｬ	1	
32	01400-00016		NUT	ﾅｯﾄ	1	
33	62170-12501		BRACKET	ﾌﾞﾗｹｯﾄ	1	
34	62170-12551		STOPPER	ｽﾄｯﾊﾟ	2	
35	04601-33216		HOSE VFHM360	ﾎｰｽ	2	
-	04601-33243		HOSE VFHM400	ﾎｰｽ	2	
-	04601-33265		HOSE VFHM435	ﾎｰｽ	2	
-	04601-33295		HOSE VFHM480	ﾎｰｽ	2	
-	04601-33314		HOSE VFHM500	ﾎｰｽ	2	
-	04601-33339		HOSE VFHM540	ﾎｰｽ	2	
-	04601-33347		HOSE VFHM550	ﾎｰｽ	2	
-	04601-33252		HOSE VFHM600	ﾎｰｽ	2	
-	04601-33271		HOSE VFHM650	ﾎｰｽ	2	
-	04601-33297		HOSE VFHM700	ﾎｰｽ	2	
-	04601-33313		HOSE VFHM750	ﾎｰｽ	2	
36	04601-33180		HOSE VFHM360	ﾎｰｽ	2	
-	04601-33192		HOSE VFHM400	ﾎｰｽ	2	

FIG.149 HYDRAULIC LINE (CONTROL VALVE-CONNECTOR)

(A502APL0) ﾊｲﾄﾞﾛﾘｯｸﾗｲﾝ (ｺﾝﾄﾛｰﾙﾊﾞﾙﾌﾞ-ｺﾈｸﾀ)

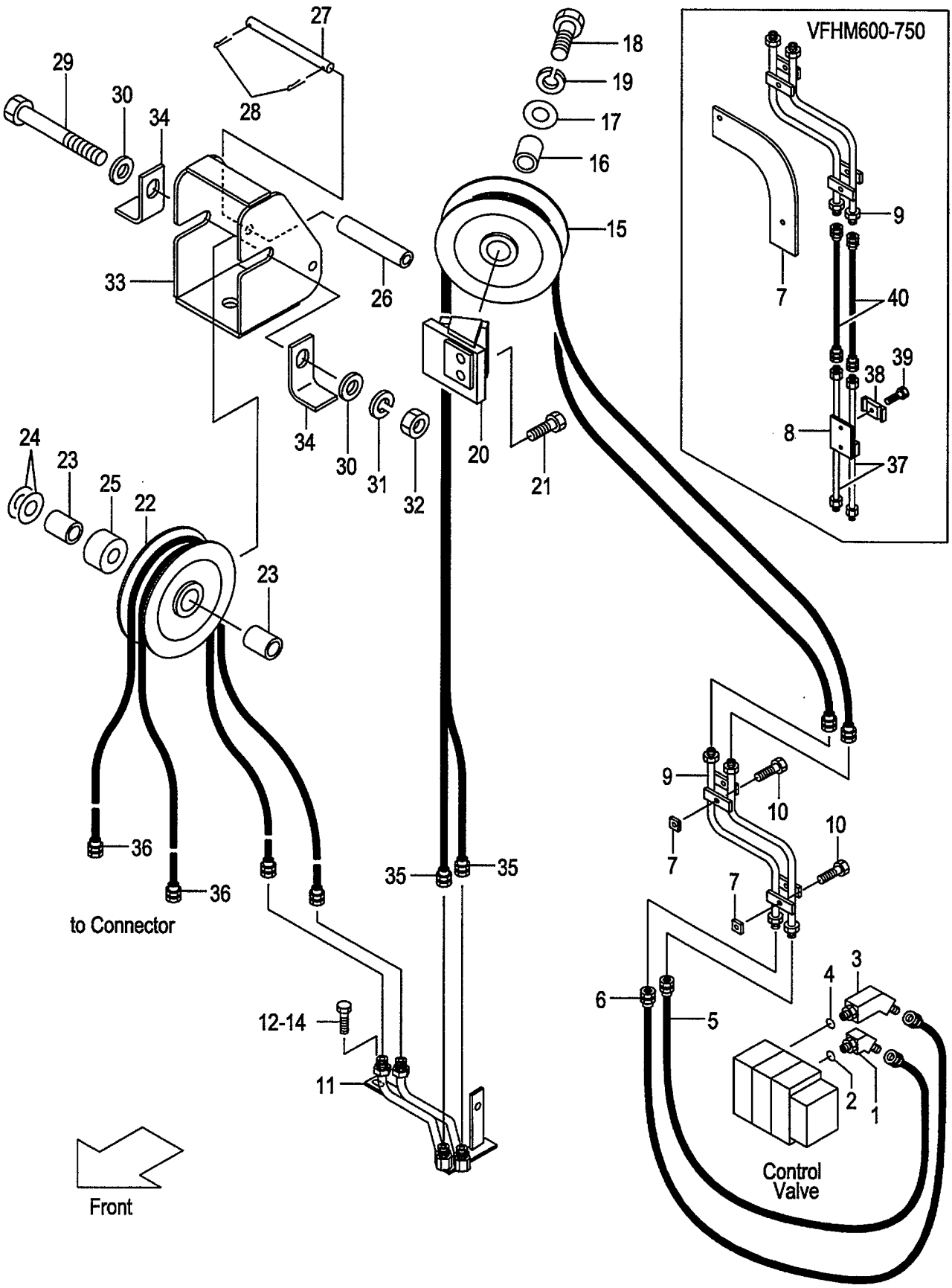

A:AP221F(VFHM/J)

Item No	Part No.	Mark	Description		Req'd	Remarks : Serial No.
-	04601-33204		HOSE VFHM435	ホース	2	
-	04601-33219		HOSE VFHM480	ホース	2	
-	04601-33229		HOSE VFHM500	ホース	2	
-	04601-33241		HOSE VFHM540	ホース	2	
-	04601-33246		HOSE VFHM550	ホース	2	
-	04601-33265		HOSE VFHM600	ホース	2	
-	04601-33286		HOSE VFHM650	ホース	2	
-	04601-33307		HOSE VFHM700	ホース	2	
-	04601-33323		HOSE VFHM750	ホース	2	
37	63160-12401		PIPE	パイプ	2	[VFHM600-750]
38	63810-12081		BAND	バンド	2	[VFHM600-750]
39	01184-10035		BOLT & WASHER	ボルト&ワッシャ	2	[VFHM600-750]
40	04601-33097		HOSE VFHM600	ホース	2	
-	04601-33119		HOSE VFHM650	ホース	2	
-	04601-33141		HOSE VFHM700	ホース	2	
-	04601-33157		HOSE VFHM750	ホース	2	
41	55787-22061	+	BLOCK,TAPPED	ブロック	1	

HYDRAULIC LINE
FIG.150 (CONT. VALVE-CONNECTOR)[AR4,4AP,ARD]
(A502APM0) ﾊｲﾄﾞﾛﾘｯｸﾗｲﾝ (ｺﾝﾄﾛｰﾙﾊﾞﾙﾌﾞ-ｺﾈｸﾀ)

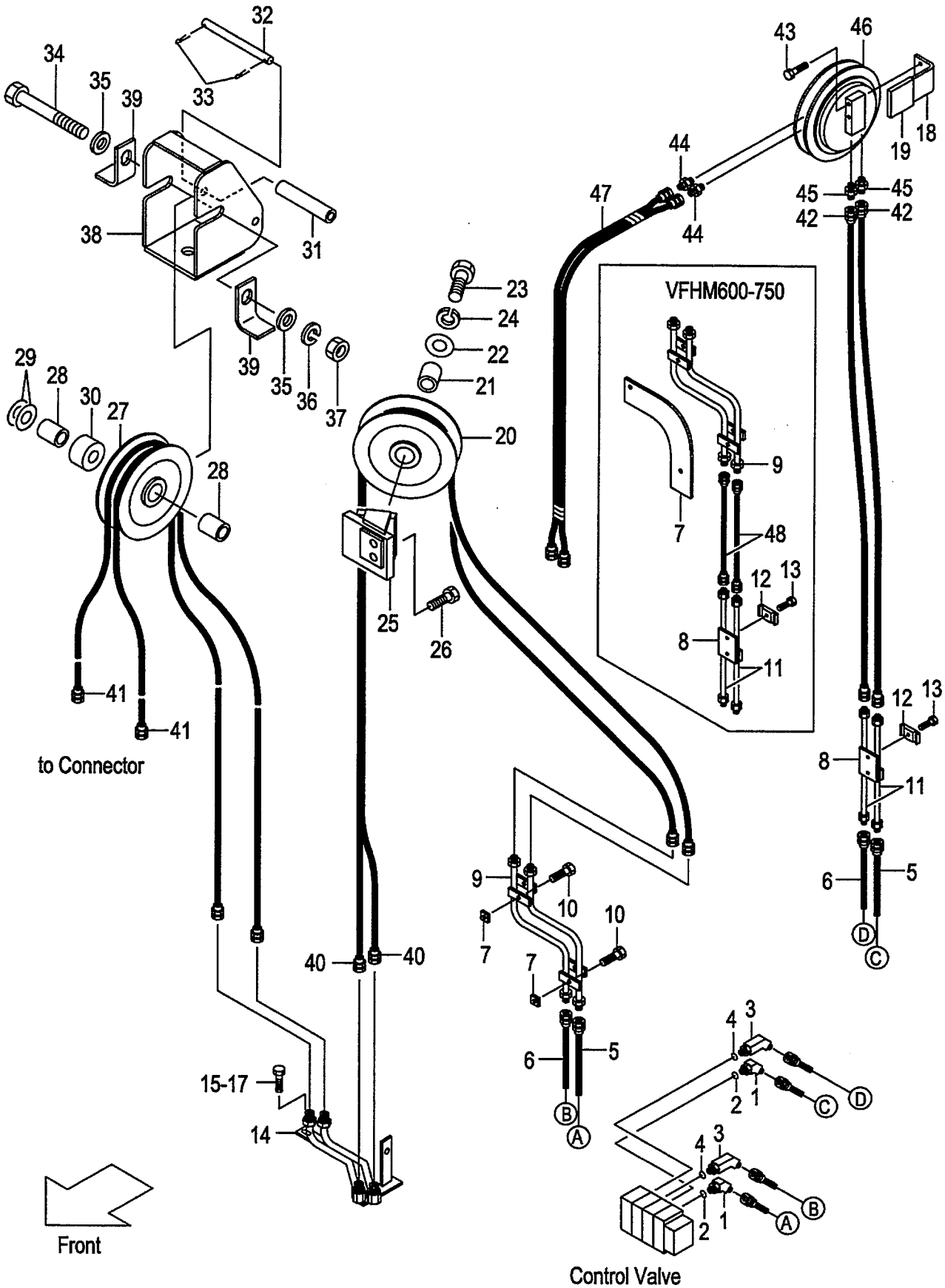

A:AP221F(VFHM/J)

Item No	Part No.	Mark	Description		Req'd	Remarks : Serial No.
A1	NO PART NO.	#	ELBOW-ASSY	ｴﾙﾎﾞｱｯｾﾝ	2	[AR4][4AP][ARD] INC.1,2
1	63130-12071		ELBOW	ｴﾙﾎﾞ	2	[AR4][4AP][ARD]
2	03320-00140		O-RING	Oﾘﾝｸﾞ	2	[AR4][4AP][ARD]
A2	NO PART NO.	#	ELBOW-ASSY	ｴﾙﾎﾞｱｯｾﾝ	2	[AR4][4AP][ARD] INC.3,4
3	62160-10011		ELBOW	ｴﾙﾎﾞ	2	[AR4][4AP][ARD]
4	03320-00140		O-RING	Oﾘﾝｸﾞ	2	[AR4][4AP][ARD]
5	62160-12302		HOSE	ﾎｰｽ	2	[AR4][4AP][ARD]
6	62160-12312		HOSE	ﾎｰｽ	2	[AR4][4AP][ARD]
7	62150-12981		BLOCK,TAPPED	ﾌﾞﾛｯｸ	2	[(AR4,4AP,ARD)/VFHM360-550]
-	63170-12161		BRACKET	ﾌﾞﾗｹｯﾄ	1	[(AR4,4AP,ARD)/VFHM600-750]
8	63680-12401		BRACKET	ﾌﾞﾗｹｯﾄ	1	[(AR4,4AP,ARD)/VFHM360-550]
-	63680-12401		BRACKET	ﾌﾞﾗｹｯﾄ	2	[(AR4,4AP,ARD)/VFHM600-750]
9	62170-12311		PIPE	ﾊﾟｲﾌﾟ	1	[AR4][4AP][ARD]
10	01183-08016		BOLT	ﾎﾞﾙﾄ	2	[AR4][4AP][ARD]
11	63160-12401		PIPE	ﾊﾟｲﾌﾟ	2	[(AR4,4AP,ARD)/VFHM360-550]
-	63160-12401		PIPE	ﾊﾟｲﾌﾟ	4	[(AR4,4AP,ARD)/VFHM600-750]
12	63810-12081		BAND	ﾊﾞﾝﾄﾞ	2	[(AR4,4AP,ARD)/VFHM360-550]
-	63810-12081		BAND	ﾊﾞﾝﾄﾞ	4	[(AR4,4AP,ARD)/VFHM600-750]
13	01184-10035		BOLT	ﾎﾞﾙﾄ	2	[(AR4,4AP,ARD)/VFHM360-550]
-	01184-10035		BOLT	ﾎﾞﾙﾄ	4	[(AR4,4AP,ARD)/VFHM600-750]
14	63170-12002		PIPE	ﾊﾟｲﾌﾟ	1	[AR4][4AP][ARD]
15	01183-08020		BOLT	ﾎﾞﾙﾄ	1	[AR4][4AP][ARD]
16	01100-10016		BOLT	ﾎﾞﾙﾄ	1	[AR4][4AP][ARD]
17	02010-10016		WASHER	ﾜｯｼｬ	1	[AR4][4AP][ARD]
18	62170-12901		BRACKET	ﾌﾞﾗｹｯﾄ	1	[AR4][4AP][ARD]
19	61163-32012		PLATE	ﾌﾟﾚｰﾄ	1	[AR4][4AP][ARD]
20	62170-12731		PULLEY	ﾌﾟｰﾘ	1	[AR4][4AP][ARD]
21	62170-12651		COLLAR	ｶﾗｰ	1	[AR4][4AP][ARD]
22	23917-42191		SHIM	ｼﾑ	2	[AR4][4AP][ARD]
23	01100-16050		BOLT	ﾎﾞﾙﾄ	1	[AR4][4AP][ARD]
24	02010-00016		WASHER	ﾜｯｼｬ	1	[AR4][4AP][ARD]
25	63170-12101		BRACKET	ﾌﾞﾗｹｯﾄ	1	[AR4][4AP][ARD]
26	01184-10030		BOLT	ﾎﾞﾙﾄ	2	[AR4][4AP][ARD]
27	62170-12731		PULLEY	ﾌﾟｰﾘ	1	[AR4][4AP][ARD]
28	62170-12651		COLLAR	ｶﾗｰ	2	[AR4][4AP][ARD]
29	23917-42191		SHIM	ｼﾑ	2	[AR4][4AP][ARD]
30	62170-12671		SPACER	ｽﾍﾟｰｻ	1	[AR4][4AP][ARD]
31	62170-12711		COLLAR	ｶﾗｰ	1	[AR4][4AP][ARD]
32	62170-12701		PIN	ﾋﾟﾝ	1	[AR4][4AP][ARD]
33	02200-32020		PIN	ﾋﾟﾝ	2	[AR4][4AP][ARD]
34	01100-16140		BOLT	ﾎﾞﾙﾄ	1	[AR4][4AP][ARD]
35	02000-00016		WASHER	ﾜｯｼｬ	2	[AR4][4AP][ARD]
36	02010-00016		WASHER	ﾜｯｼｬ	1	[AR4][4AP][ARD]
37	01400-00016		NUT	ﾅｯﾄ	1	[AR4][4AP][ARD]
38	62170-12501		BRACKET	ﾌﾞﾗｹｯﾄ	1	[AR4][4AP][ARD]
39	62170-12551		STOPPER	ｽﾄｯﾊﾟ	2	[AR4][4AP][ARD]
40	04601-33216		HOSE VFHM360	ﾎｰｽ	2	[AR4][4AP][ARD]
-	04601-33243		HOSE VFHM400	ﾎｰｽ	2	[AR4][4AP][ARD]
-	04601-33265		HOSE VFHM435	ﾎｰｽ	2	[AR4][4AP][ARD]
-	04601-33295		HOSE VFHM480	ﾎｰｽ	2	[AR4][4AP][ARD]

HYDRAULIC LINE
FIG.150 (CONT. VALVE-CONNECTOR)[AR4,4AP,ARD]
(A502APM0) ﾊｲﾄﾞﾛﾘｯｸﾗｲﾝ (ｺﾝﾄﾛｰﾙﾊﾞﾙﾌﾞ-ｺﾈｸﾀ)

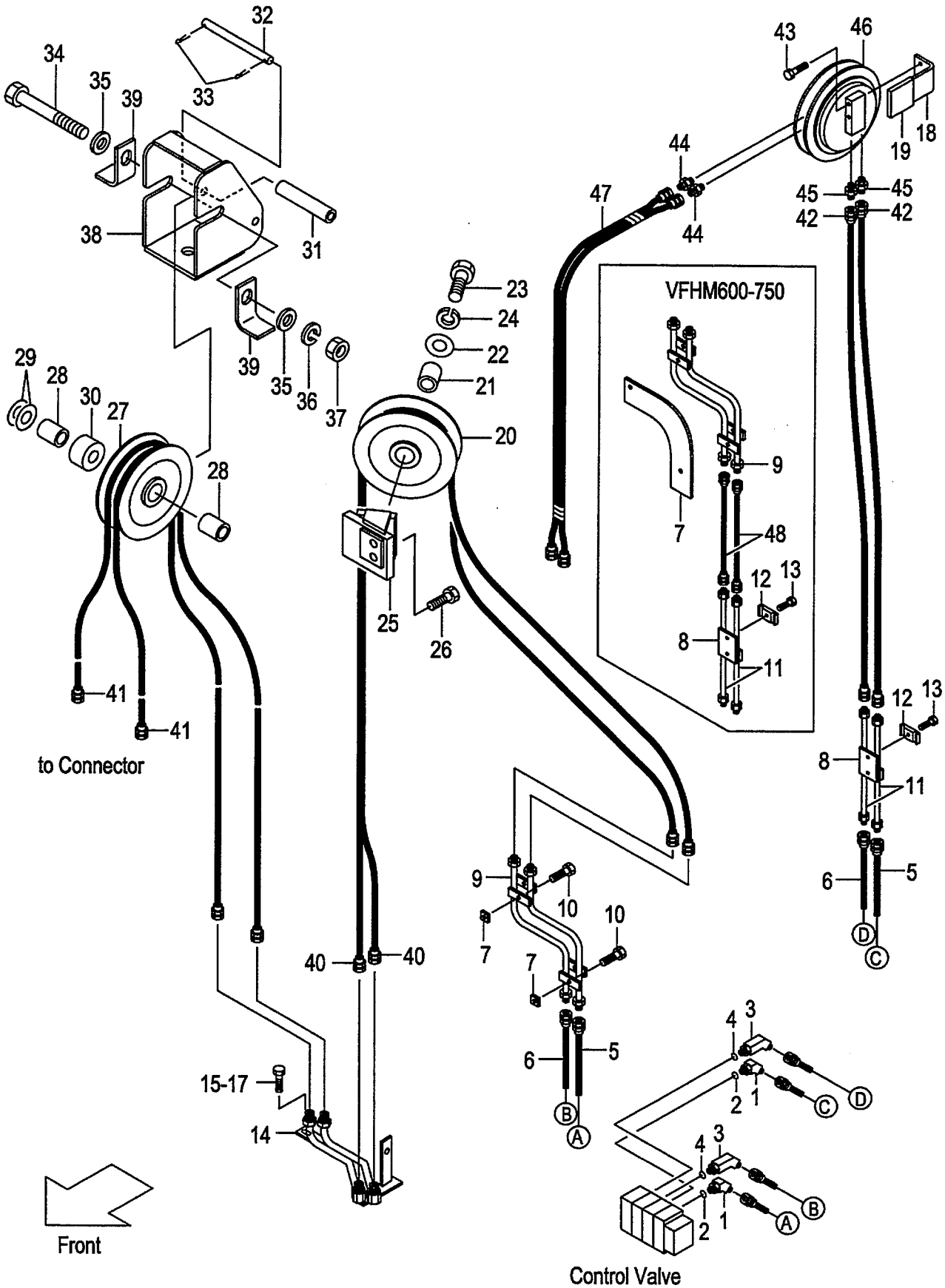

A:AP221F(VFHM/J)

Item No	Part No.	Mark	Description		Req'd	Remarks : Serial No.
-	04601-33314		HOSE VFHM500	ホース	2	[AR4][4AP][ARD]
-	04601-33339		HOSE VFHM540	ホース	2	[AR4][4AP][ARD]
-	04601-33347		HOSE VFHM550	ホース	2	[AR4][4AP][ARD]
-	04601-33252		HOSE VFHM600	ホース	2	[AR4][4AP][ARD]
-	04601-33271		HOSE VFHM650	ホース	2	[AR4][4AP][ARD]
-	04601-33297		HOSE VFHM700	ホース	2	[AR4][4AP][ARD]
-	04601-33313		HOSE VFHM750	ホース	2	[AR4][4AP][ARD]
41	04601-33180		HOSE VFHM360	ホース	2	[AR4][4AP][ARD]
-	04601-33192		HOSE VFHM400	ホース	2	[AR4][4AP][ARD]
-	04601-33204		HOSE VFHM435	ホース	2	[AR4][4AP][ARD]
-	04601-33219		HOSE VFHM480	ホース	2	[AR4][4AP][ARD]
-	04601-33229		HOSE VFHM500	ホース	2	[AR4][4AP][ARD]
-	04601-33241		HOSE VFHM540	ホース	2	[AR4][4AP][ARD]
-	04601-33246		HOSE VFHM550	ホース	2	[AR4][4AP][ARD]
-	04601-33265		HOSE VFHM600	ホース	2	[AR4][4AP][ARD]
-	04601-33286		HOSE VFHM650	ホース	2	[AR4][4AP][ARD]
-	04601-33307		HOSE VFHM700	ホース	2	[AR4][4AP][ARD]
-	04601-33323		HOSE VFHM750	ホース	2	[AR4][4AP][ARD]
42	63130-21071		HOSE VFHM360	ホース	2	[AR4][4AP][ARD]
-	63130-21084		HOSE VFHM400	ホース	2	[AR4][4AP][ARD]
-	63130-21096		HOSE VFHM435	ホース	2	[AR4][4AP][ARD]
-	63130-21111		HOSE VFHM480	ホース	2	[AR4][4AP][ARD]
-	63130-21121		HOSE VFHM500	ホース	2	[AR4][4AP][ARD]
-	63130-21134		HOSE VFHM540	ホース	2	[AR4][4AP][ARD]
-	63130-21138		HOSE VFHM550	ホース	2	[AR4][4AP][ARD]
-	63130-21156		HOSE VFHM600	ホース	2	[AR4][4AP][ARD]
-	63130-21178		HOSE VFHM650	ホース	2	[AR4][4AP][ARD]
-	63130-21200		HOSE VFHM700	ホース	2	[AR4][4AP][ARD]
-	63130-21216		HOSE VFHM750	ホース	2	[AR4][4AP][ARD]
43	01184-12065		BOLT	ボルト	2	[AR4][4AP][ARD]
44	97050-01971		FITTING	フィッティング	2	[AR4][4AP][ARD]
45	97060-45111		FITTING	フィッティング	2	[AR4][4AP][ARD]
46	61170-23001		REEL,HOSE	リール	1	[(AR4,4AP,ARD)/VFHM360-550]
-	61170-23021		REEL,HOSE	リール	1	[(AR4,4AP,ARD)/VFHM600-750]
47	63130-12621		HOSE	ホース	1	[(AR4,4AP,ARD)/VFHM360-400]
-	63130-12601		HOSE	ホース	1	[(AR4,4AP,ARD)/VFHM435-550]
-	63130-12612		HOSE	ホース	1	[(AR4,4AP,ARD)/VFHM600-750]
48	04601-33097		HOSE VFHM600	ホース	1	[AR4][4AP][ARD]
-	04601-33119		HOSE VFHM650	ホース	1	[AR4][4AP][ARD]
-	04601-33141		HOSE VFHM700	ホース	1	[AR4][4AP][ARD]
-	04601-33157		HOSE VFHM750	ホース	1	[AR4][4AP][ARD]
49	55787-22061	+	PLATE	プレート	1	[AR4][4AP][ARD]
50	62469-27001	+	DECAL,CAUTION	デカル	1	[ARD]
K1	BS-51502-08610		KIT,SEAL,REEL	リールシールキット	2	[AR4][4AP][ARD]

HYDRAULIC LINE
FIG.151 (CONT. VALVE-CONNECTOR)[AR5,5AP,ARE]
(A502APN0) ﾊｲﾄﾞﾛﾘｯｸﾗｲﾝ (ｺﾝﾄﾛｰﾙﾊﾞﾙﾌﾞ-ｺﾈｸﾀ)

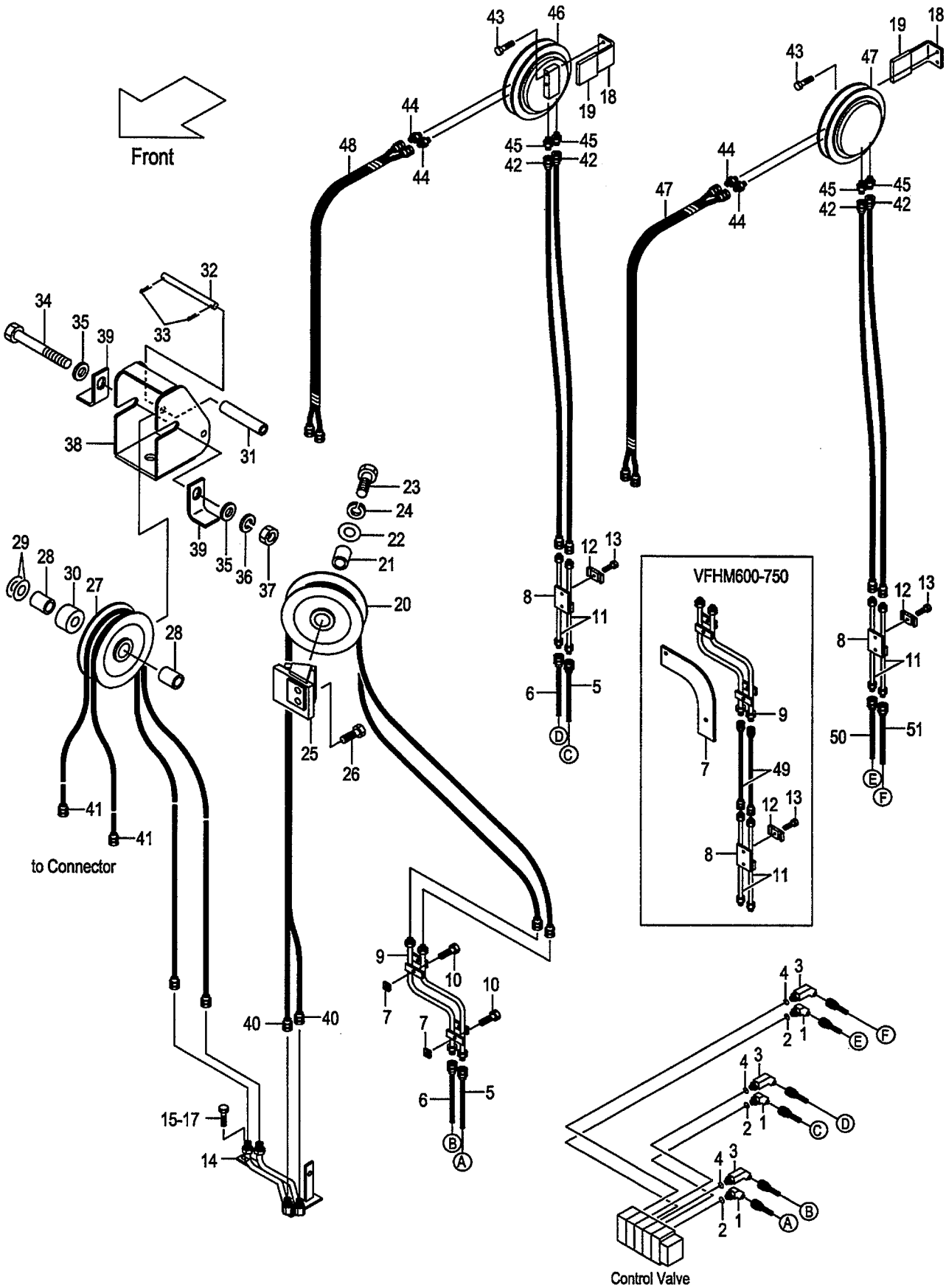

A:AP221F(VFHM/J)

Item No	Part No.	Mark	Description		Req'd	Remarks : Serial No.
A1	NO PART NO.	#	ELBOW-ASSY	ｴﾙﾎﾞｱｯｾﾝ	2	[AR5][5AP][ARE] INC.1,2
1	63130-12071		ELBOW	ｴﾙﾎﾞ	2	[AR5][5AP][ARE]
2	03320-00140		O-RING	Oﾘﾝｸﾞ	2	[AR5][5AP][ARE]
A2	NO PART NO.	#	ELBOW-ASSY	ｴﾙﾎﾞｱｯｾﾝ	2	[AR5][5AP][ARE] INC.3,4
3	62160-10011		ELBOW	ｴﾙﾎﾞ	2	[AR5][5AP][ARE]
4	03320-00140		O-RING	Oﾘﾝｸﾞ	2	[AR5][5AP][ARE]
5	62160-12302		HOSE	ﾎｰｽ	2	[AR5][5AP][ARE]
6	62160-12312		HOSE	ﾎｰｽ	2	[AR5][5AP][ARE]
7	62150-12981		BLOCK,TAPPED	ﾌﾞﾛｯｸ	2	[(AR5,5AP,ARE)/VFHM360-550]
-	63170-12161		BRACKET	ﾌﾞﾗｹｯﾄ	1	[(AR5,5AP,ARE)/VFHM600-750]
8	63680-12401		BRACKET	ﾌﾞﾗｹｯﾄ	2	[(AR5,5AP,ARE)/VFHM360-550]
-	63680-12401		BRACKET	ﾌﾞﾗｹｯﾄ	3	[(AR5,5AP,ARE)/VFHM600-750]
9	62170-12311		PIPE	ﾊﾟｲﾌﾟ	1	[AR5][5AP][ARE]
10	01183-08016		BOLT	ﾎﾞﾙﾄ	2	[AR5][5AP][ARE]
11	63160-12401		PIPE	ﾊﾟｲﾌﾟ	4	[(AR5,5AP,ARE)/VFHM360-550]
-	63160-12401		PIPE	ﾊﾟｲﾌﾟ	6	[(AR5,5AP,ARE)/VFHM600-750]
12	63810-12081		BAND	ﾊﾞﾝﾄﾞ	4	[(AR5,5AP,ARE)/VFHM360-550]
-	63810-12081		BAND	ﾊﾞﾝﾄﾞ	6	[(AR5,5AP,ARE)/VFHM600-750]
13	01184-10035		BOLT	ﾎﾞﾙﾄ	4	[(AR5,5AP,ARE)/VFHM360-550]
-	01184-10035		BOLT	ﾎﾞﾙﾄ	6	[(AR5,5AP,ARE)/VFHM600-750]
14	63170-12002		PIPE	ﾊﾟｲﾌﾟ	1	[AR5][5AP][ARE]
15	01183-08020		BOLT	ﾎﾞﾙﾄ	1	[AR5][5AP][ARE]
16	01100-10016		BOLT	ﾎﾞﾙﾄ	1	[AR5][5AP][ARE]
17	02010-10016		WASHER	ﾜｯｼｬ	1	[AR5][5AP][ARE]
18	62170-12901		BRACKET	ﾌﾞﾗｹｯﾄ	2	[AR5][5AP][ARE]
19	61163-32012		PLATE	ﾌﾟﾚｰﾄ	2	[AR5][5AP][ARE]
20	62170-12731		PULLEY	ﾌﾟｰﾘ	1	[AR5][5AP][ARE]
21	62170-12651		COLLAR	ｶﾗｰ	1	[AR5][5AP][ARE]
22	23917-42191		SHIM	ｼﾑ	2	[AR5][5AP][ARE]
23	01100-16050		BOLT	ﾎﾞﾙﾄ	1	[AR5][5AP][ARE]
24	02010-00016		WASHER	ﾜｯｼｬ	1	[AR5][5AP][ARE]
25	63170-12101		BRACKET	ﾌﾞﾗｹｯﾄ	1	[AR5][5AP][ARE]
26	01184-10030		BOLT	ﾎﾞﾙﾄ	2	[AR5][5AP][ARE]
27	62170-12731		PULLEY	ﾌﾟｰﾘ	1	[AR5][5AP][ARE]
28	62170-12651		COLLAR	ｶﾗｰ	2	[AR5][5AP][ARE]
29	23917-42191		SHIM	ｼﾑ	2	[AR5][5AP][ARE]
30	62170-12671		SPACER	ｽﾍﾟｰｻ	1	[AR5][5AP][ARE]
31	62170-12711		COLLAR	ｶﾗｰ	1	[AR5][5AP][ARE]
32	62170-12701		PIN	ﾋﾟﾝ	1	[AR5][5AP][ARE]
33	02200-32020		PIN	ﾋﾟﾝ	2	[AR5][5AP][ARE]
34	01100-16140		BOLT	ﾎﾞﾙﾄ	1	[AR5][5AP][ARE]
35	02000-00016		WASHER	ﾜｯｼｬ	2	[AR5][5AP][ARE]
36	02010-00016		WASHER	ﾜｯｼｬ	1	[AR5][5AP][ARE]
37	01400-00016		NUT	ﾅｯﾄ	1	[AR5][5AP][ARE]
38	62170-12501		BRACKET	ﾌﾞﾗｹｯﾄ	1	[AR5][5AP][ARE]
39	62170-12551		STOPPER	ｽﾄｯﾊﾟ	2	[AR5][5AP][ARE]
40	04601-33216		HOSE VFHM360	ﾎｰｽ	2	[AR5][5AP][ARE]
-	04601-33243		HOSE VFHM400	ﾎｰｽ	2	[AR5][5AP][ARE]
-	04601-33265		HOSE VFHM435	ﾎｰｽ	2	[AR5][5AP][ARE]
-	04601-33295		HOSE VFHM480	ﾎｰｽ	2	[AR5][5AP][ARE]

HYDRAULIC LINE
FIG.151 (CONT. VALVE-CONNECTOR)[AR5,5AP,ARE]
(A502APN0) ﾊｲﾄﾞﾛﾘｯｸﾗｲﾝ (ｺﾝﾄﾛｰﾙﾊﾞﾙﾌﾞ-ｺﾈｸﾀ)

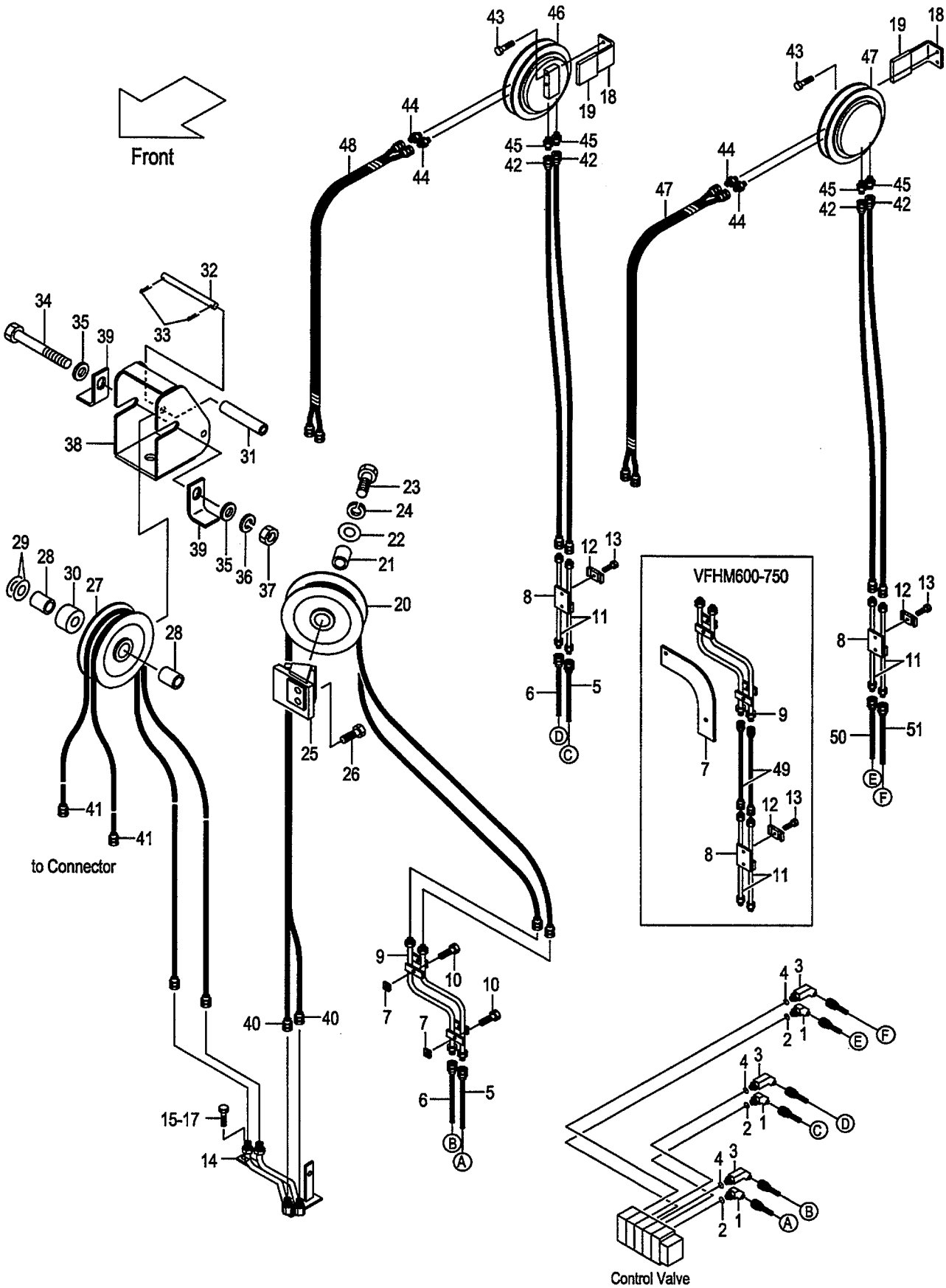

A:AP221F(VFHM/J)

Item No	Part No.	Mark	Description		Req'd	Remarks : Serial No.
-	04601-33314		HOSE VFHM500	ホース	2	[AR5][5AP][ARE]
-	04601-33339		HOSE VFHM540	ホース	2	[AR5][5AP][ARE]
-	04601-33347		HOSE VFHM550	ホース	2	[AR5][5AP][ARE]
-	04601-33252		HOSE VFHM600	ホース	2	[AR5][5AP][ARE]
-	04601-33271		HOSE VFHM650	ホース	2	[AR5][5AP][ARE]
-	04601-33297		HOSE VFHM700	ホース	2	[AR5][5AP][ARE]
-	04601-33313		HOSE VFHM750	ホース	2	[AR5][5AP][ARE]
41	04601-33180		HOSE VFHM360	ホース	2	[AR5][5AP][ARE]
-	04601-33192		HOSE VFHM400	ホース	2	[AR5][5AP][ARE]
-	04601-33204		HOSE VFHM435	ホース	2	[AR5][5AP][ARE]
-	04601-33219		HOSE VFHM480	ホース	2	[AR5][5AP][ARE]
-	04601-33229		HOSE VFHM500	ホース	2	[AR5][5AP][ARE]
-	04601-33241		HOSE VFHM540	ホース	2	[AR5][5AP][ARE]
-	04601-33246		HOSE VFHM550	ホース	2	[AR5][5AP][ARE]
-	04601-33265		HOSE VFHM600	ホース	2	[AR5][5AP][ARE]
-	04601-33286		HOSE VFHM650	ホース	2	[AR5][5AP][ARE]
-	04601-33307		HOSE VFHM700	ホース	2	[AR5][5AP][ARE]
-	04601-33323		HOSE VFHM750	ホース	2	[AR5][5AP][ARE]
42	63130-21071		HOSE VFHM360	ホース	4	[AR5][5AP][ARE]
-	63130-21084		HOSE VFHM400	ホース	4	[AR5][5AP][ARE]
-	63130-21096		HOSE VFHM435	ホース	4	[AR5][5AP][ARE]
-	63130-21111		HOSE VFHM480	ホース	4	[AR5][5AP][ARE]
-	63130-21121		HOSE VFHM500	ホース	4	[AR5][5AP][ARE]
-	63130-21134		HOSE VFHM540	ホース	4	[AR5][5AP][ARE]
-	63130-21138		HOSE VFHM550	ホース	4	[AR5][5AP][ARE]
-	63130-21156		HOSE VFHM600	ホース	4	[AR5][5AP][ARE]
-	63130-21178		HOSE VFHM650	ホース	4	[AR5][5AP][ARE]
-	63130-21200		HOSE VFHM700	ホース	4	[AR5][5AP][ARE]
-	63130-21216		HOSE VFHM750	ホース	4	[AR5][5AP][ARE]
43	01184-12065		BOLT	ボルト	4	[AR5][5AP][ARE]
44	97050-01971		FITTING	フィッティング	4	[AR5][5AP][ARE]
45	97060-45111		FITTING	フィッティング	4	[AR5][5AP][ARE]
46	61170-23001		REEL,HOSE,RH	リール	1	[(AR5,5AP,ARE)/VFHM360-550]
-	61170-23021		REEL,HOSE,RH	リール	1	[(AR5,5AP,ARE)/VFHM600-750]
47	61170-23011		REEL,HOSE,LH	リール	1	[(AR5,5AP,ARE)/VFHM360-550]
-	61170-23031		REEL,HOSE,LH	リール	1	[(AR5,5AP,ARE)/VFHM600-750]
48	63130-12621		HOSE	ホース	2	[(AR5,5AP,ARE)/VFHM360-400]
-	63130-12601		HOSE	ホース	2	[(AR5,5AP,ARE)/VFHM435-550]
-	63130-12612		HOSE	ホース	2	[(AR5,5AP,ARE)/VFHM600-750]
49	04601-33097		HOSE VFHM600	ホース	1	[AR5][5AP][ARE]
-	04601-33119		HOSE VFHM650	ホース	1	[AR5][5AP][ARE]
-	04601-33141		HOSE VFHM700	ホース	1	[AR5][5AP][ARE]
-	04601-33157		HOSE VFHM750	ホース	1	[AR5][5AP][ARE]
50	62150-12522		HOSE	ホース	1	[AR5][5AP][ARE]
51	62150-12532		HOSE	ホース	1	[AR5][5AP][ARE]
52	55787-22061	+	PLATE	プレート	1	[AR5][5AP][ARE]
53	62469-27001	+	DECAL,CAUTION	デカル	1	[ARE]
K1	BS-51502-08610		KIT,SEAL,REEL	リールシールキット	2	[AR5][5AP][ARE]

FIG.152 HYDRAULIC LINE (CONTROL VALVE-CONNECTOR)[A3R,A3S]

(A502APP0) ﾊｲﾄﾞﾛﾘｯｸﾗｲﾝ (ｺﾝﾄﾛｰﾙﾊﾞﾙﾌﾞ-ｺﾈｸﾀ)

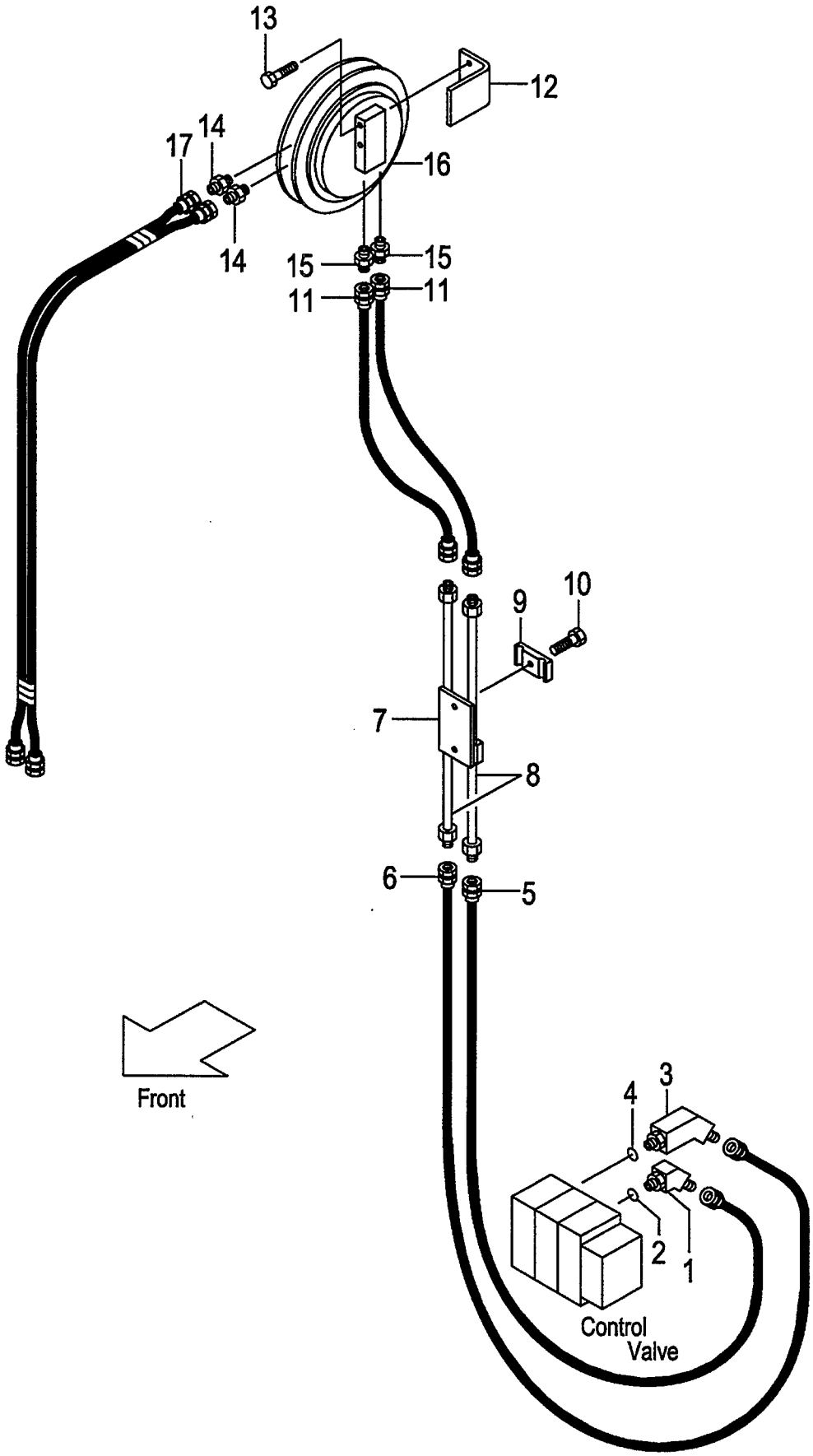

A:AP221F(VFHM/J)

Item No	Part No.	Mark	Description		Req'd	Remarks : Serial No.
A1	NO PART NO.	#	ELBOW-ASSY	ｴﾙﾎﾞｱｯｾﾝ	1	[A3R][A3S] INC.1,2
1	63130-12071		ELBOW	ｴﾙﾎﾞ	1	[A3R][A3S]
2	03320-00140		O-RING	Oﾘﾝｸﾞ	1	[A3R][A3S]
A2	NO PART NO.	#	ELBOW-ASSY	ｴﾙﾎﾞｱｯｾﾝ	1	[A3R][A3S] INC.3,4
3	62160-10011		ELBOW	ｴﾙﾎﾞ	1	[A3R][A3S]
4	03320-00140		O-RING	Oﾘﾝｸﾞ	1	[A3R][A3S]
5	62160-12302		HOSE	ﾎｰｽ	1	[A3R][A3S]
6	62160-12312		HOSE	ﾎｰｽ	1	[A3R][A3S]
7	63680-12401		BRACKET	ﾌﾞﾗｹｯﾄ	1	[A3R][A3S]
8	63160-12401		PIPE	ﾊﾟｲﾌﾟ	2	[A3R][A3S]
9	63810-12081		BAND	ﾊﾞﾝﾄﾞ	2	[A3R][A3S]
10	01184-10035		BOLT	ﾎﾞﾙﾄ	2	[A3R][A3S]
11	63130-21071		HOSE VFHM360	ﾎｰｽ	2	[A3R][A3S]
-	63130-21084		HOSE VFHM400	ﾎｰｽ	2	[A3R][A3S]
-	63130-21096		HOSE VFHM435	ﾎｰｽ	2	[A3R][A3S]
-	63130-21111		HOSE VFHM480	ﾎｰｽ	2	[A3R][A3S]
-	63130-21121		HOSE VFHM500	ﾎｰｽ	2	[A3R][A3S]
-	63130-21134		HOSE VFHM540	ﾎｰｽ	2	[A3R][A3S]
-	63130-21138		HOSE VFHM550	ﾎｰｽ	2	[A3R][A3S]
-	63130-21156		HOSE VFHM600	ﾎｰｽ	2	[A3R][A3S]
-	63130-21178		HOSE VFHM650	ﾎｰｽ	2	[A3R][A3S]
-	63130-21200		HOSE VFHM700	ﾎｰｽ	2	[A3R][A3S]
-	63130-21216		HOSE VFHM750	ﾎｰｽ	2	[A3R][A3S]
12	62170-12901		BRACKET	ﾌﾞﾗｹｯﾄ	1	[A3R][A3S]
13	01184-12065		BOLT	ﾎﾞﾙﾄ	2	[A3R][A3S]
14	97050-01971		FITTING	ﾌｨｯﾃｨﾝｸﾞ	2	[A3R][A3S]
15	97060-45111		FITTING	ﾌｨｯﾃｨﾝｸﾞ	2	[A3R][A3S]
16	61170-23001		REEL,HOSE	ﾘｰﾙ	1	[(A3R,A3S)/VFHM360-550]
-	61170-23021		REEL,HOSE	ﾘｰﾙ	1	[(A3R,A3S)/VFHM600-750]
17	63130-12621		HOSE	ﾎｰｽ	1	[(A3R,A3S)/VFHM360-400]
-	63130-12601		HOSE	ﾎｰｽ	1	[(A3R,A3S)/VFHM435-550]
-	63130-12612		HOSE	ﾎｰｽ	1	[(A3R,A3S)/VFHM600-750]
18	62469-27001	+	DECAL,CAUTION	ﾃﾞｶﾙ	1	[A3S]
K1	BS-51502-08610		KIT,SEAL,REEL	ﾘｰﾙｼｰﾙｷｯﾄ	2	[A3R][A3S]

FIG.153 HYDRAULIC LINE (CONTROL VALVE-CONNECTOR)[A4R,A4S]

(A502APQ0) ﾊｲﾄﾞﾛﾘｯｸﾗｲﾝ (ｺﾝﾄﾛｰﾙﾊﾞﾙﾌﾞ-ｺﾈｸﾀ)

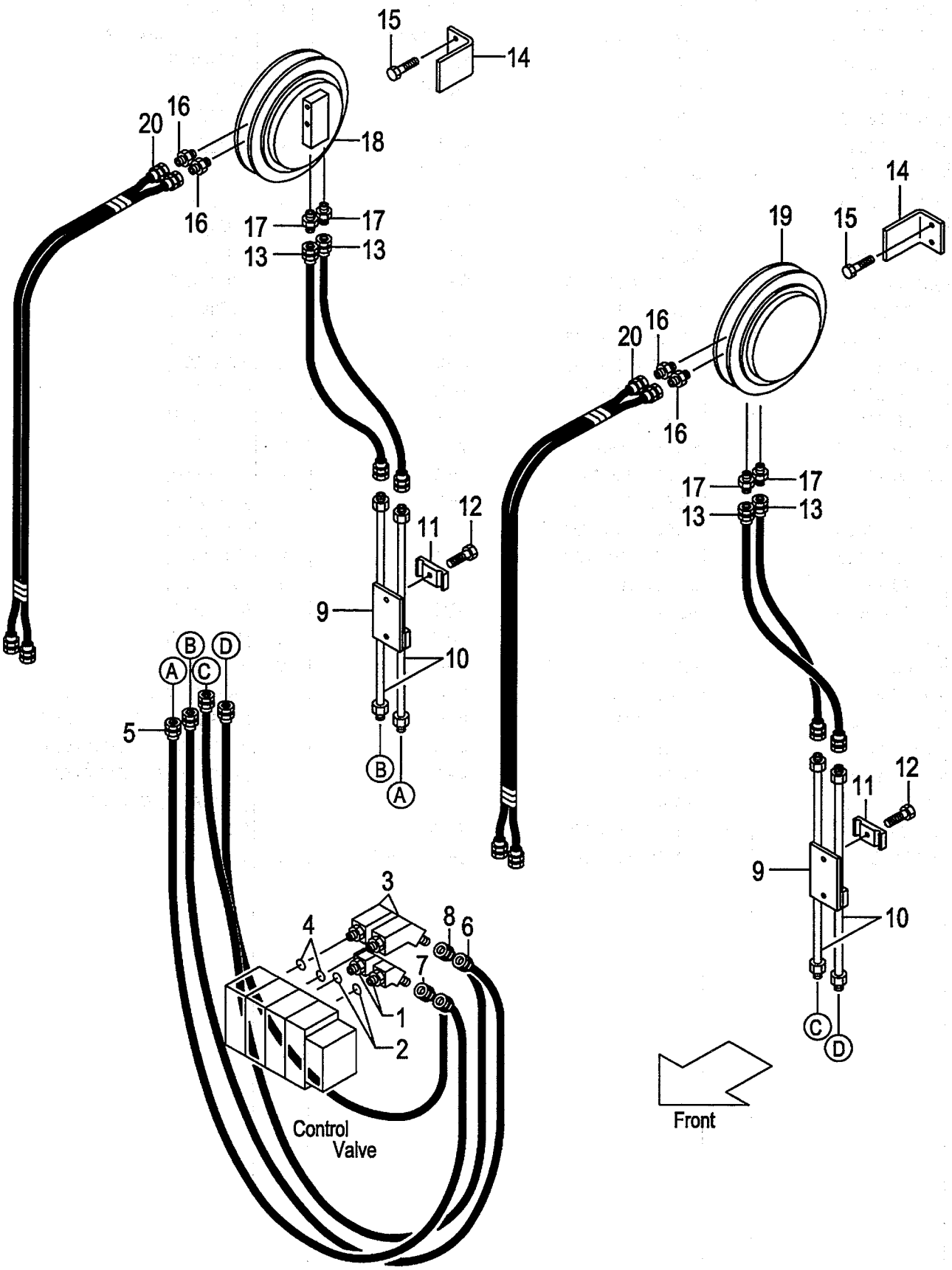

A:AP221F(VFHM/J)

Item No	Part No.	Mark	Description		Req'd	Remarks : Serial No.
A1	NO PART NO.	#	ELBOW-ASSY	ｴﾙﾎﾞｱｯｾﾝ	2	[A4R][A4S] INC.1,2
1	63130-12071		ELBOW	ｴﾙﾎﾞ	2	[A4R][A4S]
2	03320-00140		O-RING	Oﾘﾝｸﾞ	2	[A4R][A4S]
A2	NO PART NO.	#	ELBOW-ASSY	ｴﾙﾎﾞｱｯｾﾝ	2	[A4R][A4S] INC.3,4
3	62160-10011		ELBOW	ｴﾙﾎﾞ	2	[A4R][A4S]
4	03320-00140		O-RING	Oﾘﾝｸﾞ	2	[A4R][A4S]
5	62160-12302		HOSE	ﾎｰｽ	2	[A4R][A4S]
6	62160-12312		HOSE	ﾎｰｽ	2	[A4R][A4S]
7	62150-12522		HOSE	ﾎｰｽ	2	[A4R][A4S]
8	62150-12532		HOSE	ﾎｰｽ	2	[A4R][A4S]
9	63680-12401		BRACKET	ﾌﾞﾗｹｯﾄ	2	[A4R][A4S]
10	63160-12401		PIPE	ﾊﾟｲﾌﾟ	4	[A4R][A4S]
11	63810-12081		BAND	ﾊﾞﾝﾄﾞ	4	[A4R][A4S]
12	01184-10035		BOLT	ﾎﾞﾙﾄ	4	[A4R][A4S]
13	63130-21071		HOSE VFHM360	ﾎｰｽ	4	[A4R][A4S]
-	63130-21084		HOSE VFHM400	ﾎｰｽ	4	[A4R][A4S]
-	63130-21096		HOSE VFHM435	ﾎｰｽ	4	[A4R][A4S]
-	63130-21111		HOSE VFHM480	ﾎｰｽ	4	[A4R][A4S]
-	63130-21121		HOSE VFHM500	ﾎｰｽ	4	[A4R][A4S]
-	63130-21134		HOSE VFHM540	ﾎｰｽ	4	[A4R][A4S]
-	63130-21138		HOSE VFHM550	ﾎｰｽ	4	[A4R][A4S]
-	63130-21156		HOSE VFHM600	ﾎｰｽ	4	[A4R][A4S]
-	63130-21178		HOSE VFHM650	ﾎｰｽ	4	[A4R][A4S]
-	63130-21200		HOSE VFHM700	ﾎｰｽ	4	[A4R][A4S]
-	63130-21216		HOSE VFHM750	ﾎｰｽ	4	[A4R][A4S]
14	62170-12901		BRACKET	ﾌﾞﾗｹｯﾄ	2	[A4R][A4S]
15	01184-12065		BOLT	ﾎﾞﾙﾄ	4	[A4R][A4S]
16	97050-01971		FITTING	ﾌｨｯﾃｨﾝｸﾞ	4	[A4R][A4S]
17	97060-45111		FITTING	ﾌｨｯﾃｨﾝｸﾞ	4	[A4R][A4S]
18	61170-23001		REEL,HOSE,RH	ﾘｰﾙ	1	[(A4R,A4S)/VFHM360-550]
-	61170-23021		REEL,HOSE,RH	ﾘｰﾙ	1	[(A4R,A4S)/VFHM600-750]
19	61170-23011		REEL,HOSE,LH	ﾘｰﾙ	1	[(A4R,A4S)/VFHM360-550]
-	61170-23031		REEL,HOSE,LH	ﾘｰﾙ	1	[(A4R,A4S)/VFHM600-750]
20	63130-12621		HOSE	ﾎｰｽ	2	[(A4R,A4S)/VFHM360-400]
-	63130-12601		HOSE	ﾎｰｽ	2	[(A4R,A4S)/VFHM435-550]
-	63130-12612		HOSE	ﾎｰｽ	2	[(A4R,A4S)/VFHM600-750]
21	62469-27001	+	DECAL,CAUTION	ﾃﾞｶﾙ	1	[A4S]
K1	BS-51502-08610		KIT,SEAL,REEL	ﾘｰﾙｼｰﾙｷｯﾄ	2	[A4R][A4S]

FIG.154 HYDRAULIC LINE (RELIEF VALVE)[VRV]

(A502APR0) ﾊｲﾄﾞﾛﾘｯｸﾗｲﾝ (ﾘﾘｰﾌﾊﾞﾙﾌﾞ)

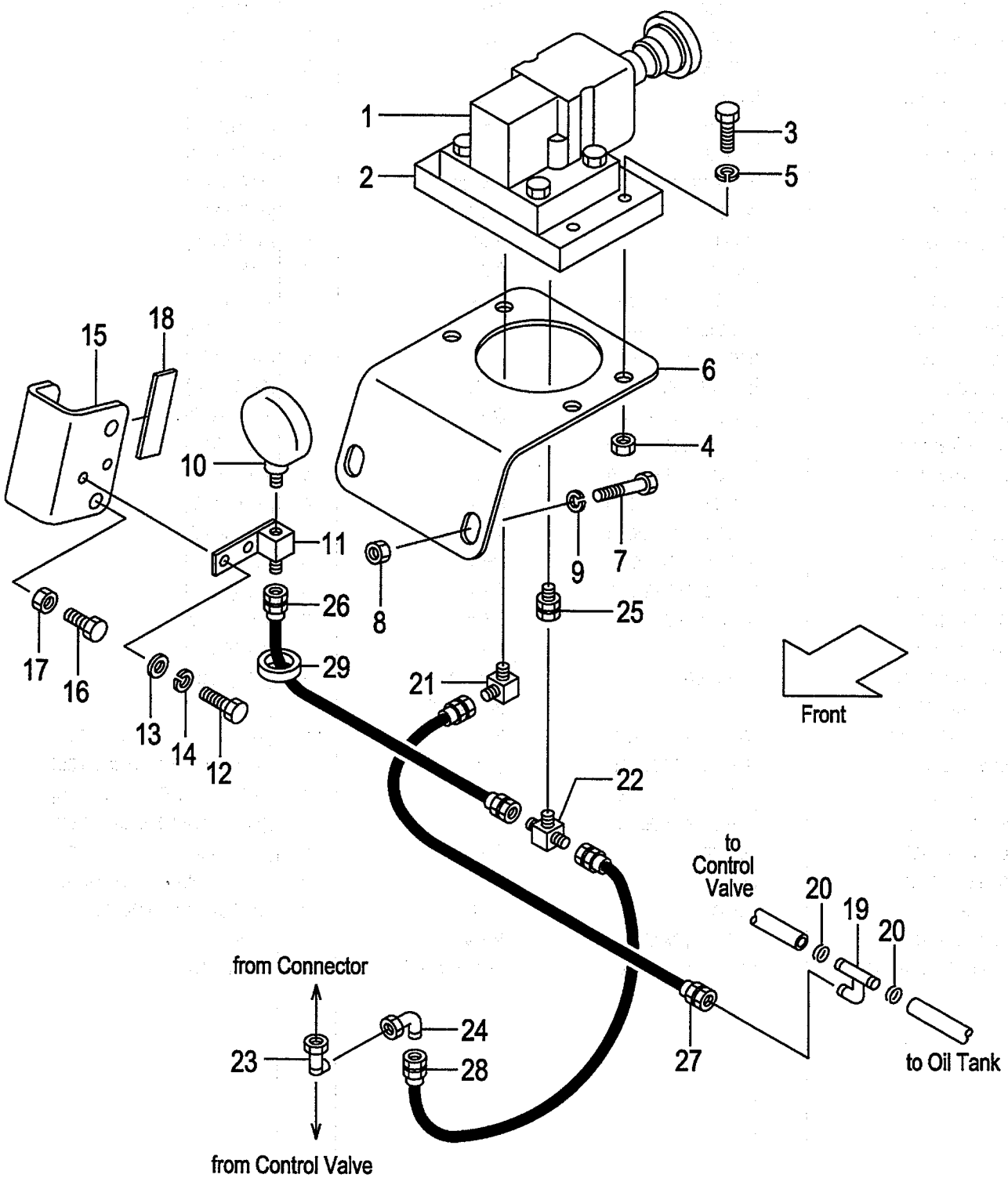

FIG.154
(A502APR0)

A:AP221F(VFHM/J)

Item No	Part No.	Mark	Description		Req'd	Remarks : Serial No.
1	63130-15771		VALVE,RELIEF	ﾊﾞﾙﾌﾞ	1	[VRV]
2	63130-15921		PLATE	ﾌﾟﾚｰﾄ	1	[VRV]
3	01181-08030		BOLT	ﾎﾞﾙﾄ	4	[VRV]
4	01400-00008		NUT	ﾅｯﾄ	4	[VRV]
5	02010-00008		WASHER	ﾜｯｼｬ	4	[VRV]
6	61170-10151		BRACKET	ﾌﾞﾗｹｯﾄ	1	[VRV]
7	01181-10025		BOLT	ﾎﾞﾙﾄ	2	[VRV]
8	01400-00010		NUT	ﾅｯﾄ	2	[VRV]
9	02010-00010		WASHER	ﾜｯｼｬ	2	[VRV]
10	63110-20221		GAUGE	ｹﾞｰｼﾞ	1	[VRV]
11	62150-14041		STUD	ｽﾀｯﾄﾞ	1	[VRV]
12	01100-08012		BOLT	ﾎﾞﾙﾄ	2	[VRV]
13	02000-00008		WASHER	ﾜｯｼｬ	2	[VRV]
14	02010-00008		WASHER	ﾜｯｼｬ	2	[VRV]
15	61170-10101		BRACKET	ﾌﾞﾗｹｯﾄ	1	[VRV]
16	01100-10016		BOLT	ﾎﾞﾙﾄ	2	[VRV]
17	01402-00010		NUT	ﾅｯﾄ	2	[VRV]
18	61170-10111		RUBBER	ﾗﾊﾞｰ	1	[VRV]
19	62150-14011		PIPE	ﾊﾟｲﾌﾟ	1	[VRV]
20	63110-20261		CLIP	ｸﾘｯﾌﾟ	2	[VRV]
21	53110-12121		ELBOW	ｴﾙﾎﾞ	1	[VRV]
22	61170-10201		THREE-WAY	ｽﾘｰｳｴｲ	1	[VRV]
23	62150-14001		THREE-WAY	ｽﾘｰｳｴｲ	1	[VRV]
24	62150-14311		ELBOW	ｴﾙﾎﾞ	1	[VRV]
25	04138-00303		UNION	ﾕﾆｵﾝ	1	[VRV]
26	63130-31055		HOSE	ﾎｰｽ	1	[VRV]
27	63130-21085		HOSE	ﾎｰｽ	1	[VRV]
28	63130-21120		HOSE	ﾎｰｽ	1	[VRV]
29	04913-11300		BAND	ﾊﾞﾝﾄﾞ	2	[VRV]
30	63130-12751	+	PLUG	ﾌﾟﾗｸﾞ	1	[VRV]

FIG.155 LAMP BRACKET [AP221F]

(A502APS0) ﾗﾝﾌﾟﾌﾞﾗｹｯﾄ

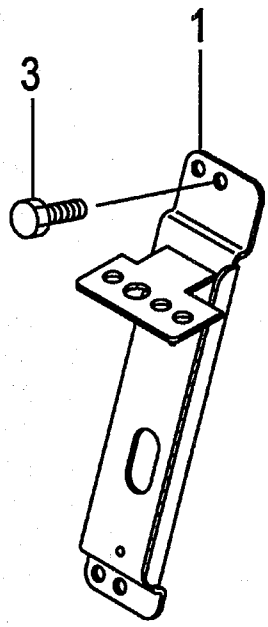

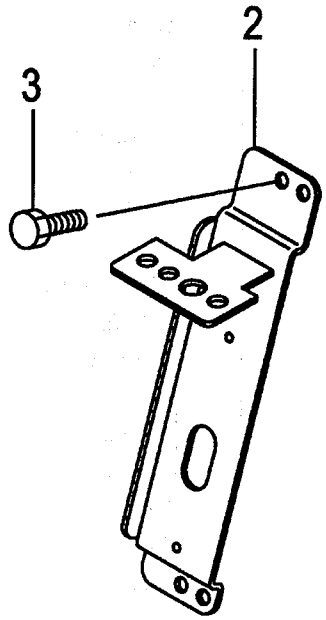

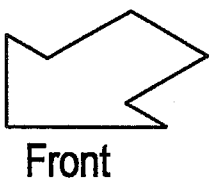

A:AP221F(VFHM/J)

Item No	Part No.	Mark	Description		Req'd	Remarks : Serial No.
1	239A5-12521		BRACKET,RH	ﾌﾞﾗｹｯﾄ	1	
2	239A5-12501		BRACKET,LH	ﾌﾞﾗｹｯﾄ	1	
3	01183-08016		BOLT	ﾎﾞﾙﾄ	4	
4	04913-11100	+	BAND	ﾊﾞﾝﾄﾞ	2	
5	239A2-42221	+	WIRE-HARNESS,HG	ﾜｲﾔﾊｰﾈｽ	2	
6	216G2-40602	+	LAMP,HEAD	ﾗﾝﾌﾟ	2	INC.7
7	216G2-40611	+	BULB,12V/55W	ﾊﾞﾙﾌﾞ	1	
8	216G2-40701	+	LAMP,COMBI.,FRONT	ﾗﾝﾌﾟ	2	INC.9-11
9	216G2-40711	+	BULB,TURN-SIGNAL	ﾊﾞﾙﾌﾞ	1	
10	216G2-40721	+	BULB,12V/10W	ﾊﾞﾙﾌﾞ	1	
11	216G2-40731	+	LENS	ﾚﾝｽﾞ	1	

FIG.156 LAMP BKT.[AP221F/(AR4,AR5,4AP,5AP,ARD, ARE,A3R,A4R,A3S,A4S)]

(A502APT0) ﾗﾝﾌﾟﾌﾞﾗｹｯﾄ

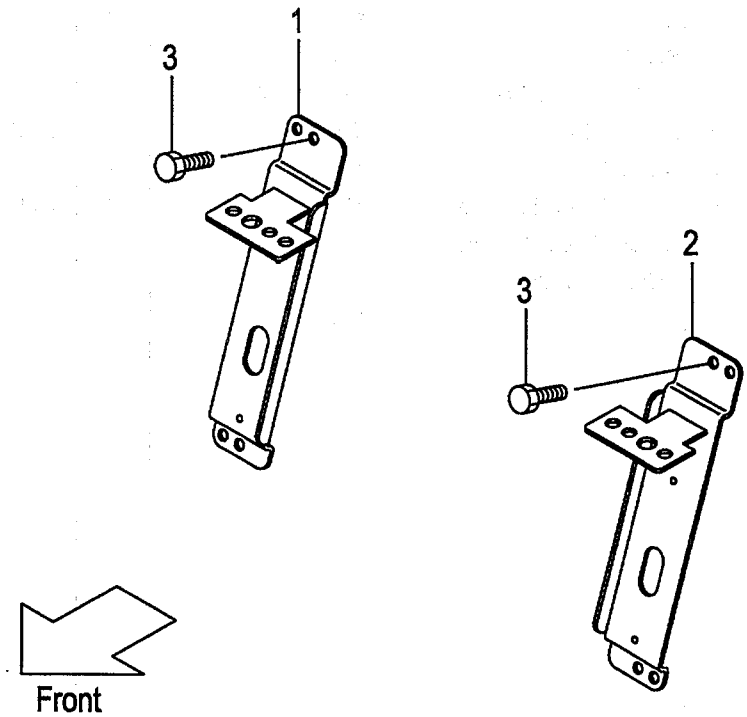

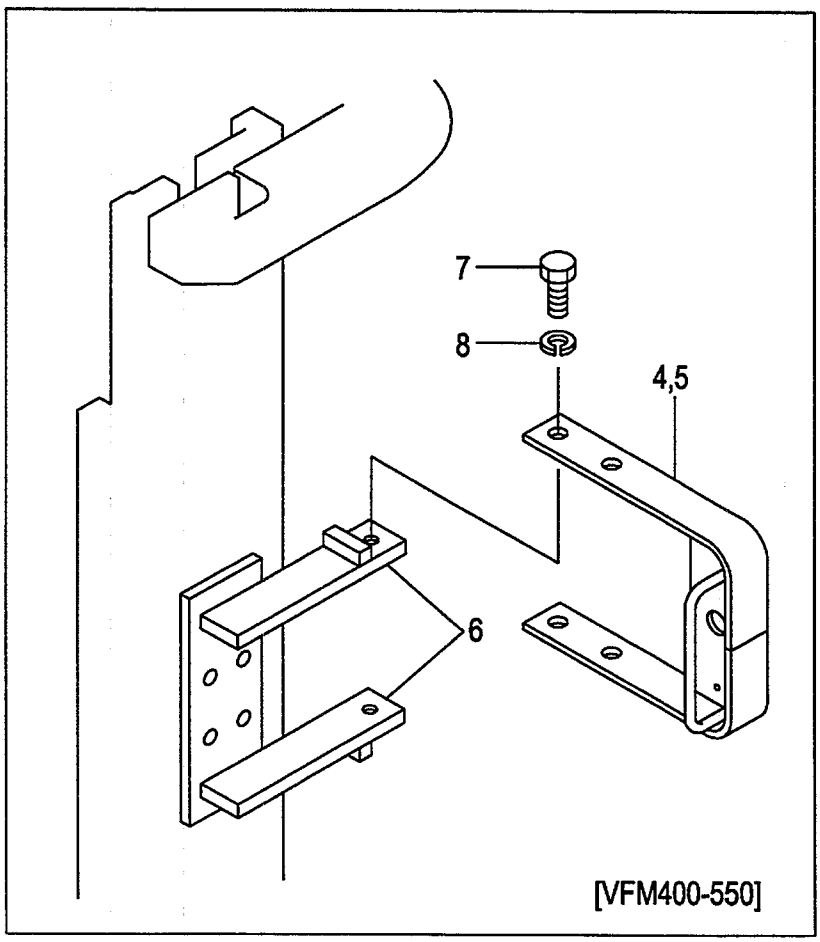

A:AP221F(VFHM/J)

Item No	Part No.	Mark	Description		Req'd	Remarks : Serial No.
1	239A5-12521		BRACKET,RH	ﾌﾞﾗｹｯﾄ	1	[(AR4,AR5,4AP,5AP,ARD,ARE) /(VFHM360,600-750)]
-	239A5-12521		BRACKET,RH	ﾌﾞﾗｹｯﾄ	1	[(A3R,A4R,A3S,A4S) /(VFHM360,600-750)]
2	239A5-12501		BRACKET,LH	ﾌﾞﾗｹｯﾄ	1	[(AR4,AR5,4AP,5AP,ARD,ARE) /(VFHM360,600-750)]
-	239A5-12501		BRACKET,LH	ﾌﾞﾗｹｯﾄ	1	[(A3R,A4R,A3S,A4S) /(VFHM360,600-750)]
3	01183-08016		BOLT	ﾎﾞﾙﾄ	4	[(AR4,AR5,4AP,5AP,ARD,ARE) /(VFHM360,600-750)]
-	01183-08016		BOLT	ﾎﾞﾙﾄ	4	[(A3R,A4R,A3S,A4S) /(VFHM360,600-750)]
4	534A9-22001		BRACKET,RH	ﾌﾞﾗｹｯﾄ	1	[(AR4,AR5,4AP,5AP,ARD,ARE) /VFHM400-550]
-	534A9-22001		BRACKET,RH	ﾌﾞﾗｹｯﾄ	1	[(A3R,A4R,A3S,A4S)/VFHM400-550]
5	534A9-22011		BRACKET,LH	ﾌﾞﾗｹｯﾄ	1	[(AR4,AR5,4AP,5AP,ARD,ARE) /VFHM400-550]
-	534A9-22011		BRACKET,LH	ﾌﾞﾗｹｯﾄ	1	[(A3R,A4R,A3S,A4S)/VFHM400-550]
6	621B0-12641		BRACKET	ﾌﾞﾗｹｯﾄ	4	[(AR4,AR5,4AP,5AP,ARD,ARE) /VFHM400-550]
-	621B0-12641		BRACKET	ﾌﾞﾗｹｯﾄ	4	[(A3R,A4R,A3S,A4S)/VFHM400-550]
7	01100-12020		BOLT	ﾎﾞﾙﾄ	4	[(AR4,AR5,4AP,5AP,ARD,ARE) /VFHM400-550]
-	01100-12020		BOLT	ﾎﾞﾙﾄ	4	[(A3R,A4R,A3S,A4S)/VFHM400-550]
8	02010-00012		WASHER	ﾜｯｼｬ	4	[(AR4,AR5,4AP,5AP,ARD,ARE) /VFHM400-550]
-	02010-00012		WASHER	ﾜｯｼｬ	4	[(A3R,A4R,A3S,A4S)/VFHM400-550]
9	239A2-42221	+	WIRE-HARNESS,HG	ﾜｲﾔﾊｰﾈｽ	2	[(AR4,AR5,4AP,5AP,ARD,ARE) /(VFHM360,600-750)]
-	239A2-42221	+	WIRE-HARNESS,HG	ﾜｲﾔﾊｰﾈｽ	2	[(A3R,A4R,A3S,A4S) /(VFHM360,600-750)]
-	534A9-22201	+	WIRE-HARNESS,HG	ﾜｲﾔﾊｰﾈｽ	2	[(AR4,AR5,4AP,5AP,ARD,ARE) /VFHM400-435]
-	534A9-22201	+	WIRE-HARNESS,HG	ﾜｲﾔﾊｰﾈｽ	2	[(A3R,A4R,A3S,A4S)/VFHM400-435]
-	534A9-22211	+	WIRE-HARNESS,HG	ﾜｲﾔﾊｰﾈｽ	2	[(AR4,AR5,4AP,5AP,ARD,ARE) /VFHM480-550]
-	534A9-22211	+	WIRE-HARNESS,HG	ﾜｲﾔﾊｰﾈｽ	2	[(A3R,A4R,A3S,A4S)/VFHM480-550]
10	27732-42221	+	CLAMP	ｸﾗﾝﾌﾟ	2	[(AR4,AR5,4AP,5AP,ARD,ARE) /VFHM400-750]
-	27732-42221	+	CLAMP	ｸﾗﾝﾌﾟ	2	[(A3R,A4R,A3S,A4S)/VFHM400-750]
11	04913-11100	+	BAND	ﾊﾞﾝﾄﾞ	2	[(AR4,AR5,4AP,5AP,ARD,ARE) /(VFHM360,600-750)]
-	04913-11100	+	BAND	ﾊﾞﾝﾄﾞ	2	[(A3R,A4R,A3S,A4S) /(VFHM360,600-750)]
-	04913-11380	+	BAND	ﾊﾞﾝﾄﾞ	4	[(AR4,AR5,4AP,5AP,ARD,ARE) /VFHM400-435]
-	04913-11380	+	BAND	ﾊﾞﾝﾄﾞ	4	[(A3R,A4R,A3S,A4S)/VFHM400-435]
-	04913-11380	+	BAND	ﾊﾞﾝﾄﾞ	6	[(AR4,AR5,4AP,5AP,ARD,ARE) /VFHM480-550]
-	04913-11380	+	BAND	ﾊﾞﾝﾄﾞ	6	[(A3R,A4R,A3S,A4S)/VFHM480-550]

FIG.156 LAMP BKT.[AP221F/(AR4,AR5,4AP,5AP,ARD, ARE,A3R,A4R,A3S,A4S)]

(A502APT0) ﾗﾝﾌﾟﾌﾞﾗｹｯﾄ

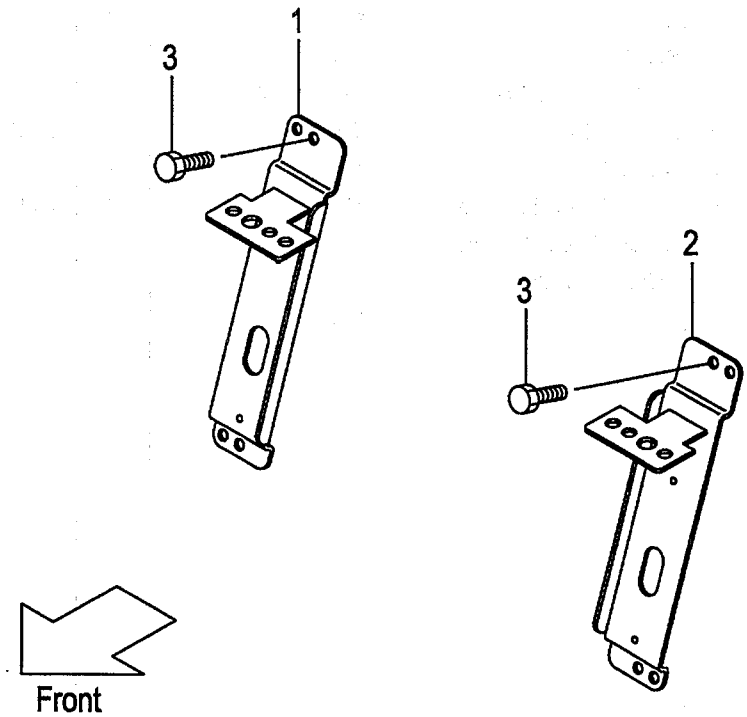

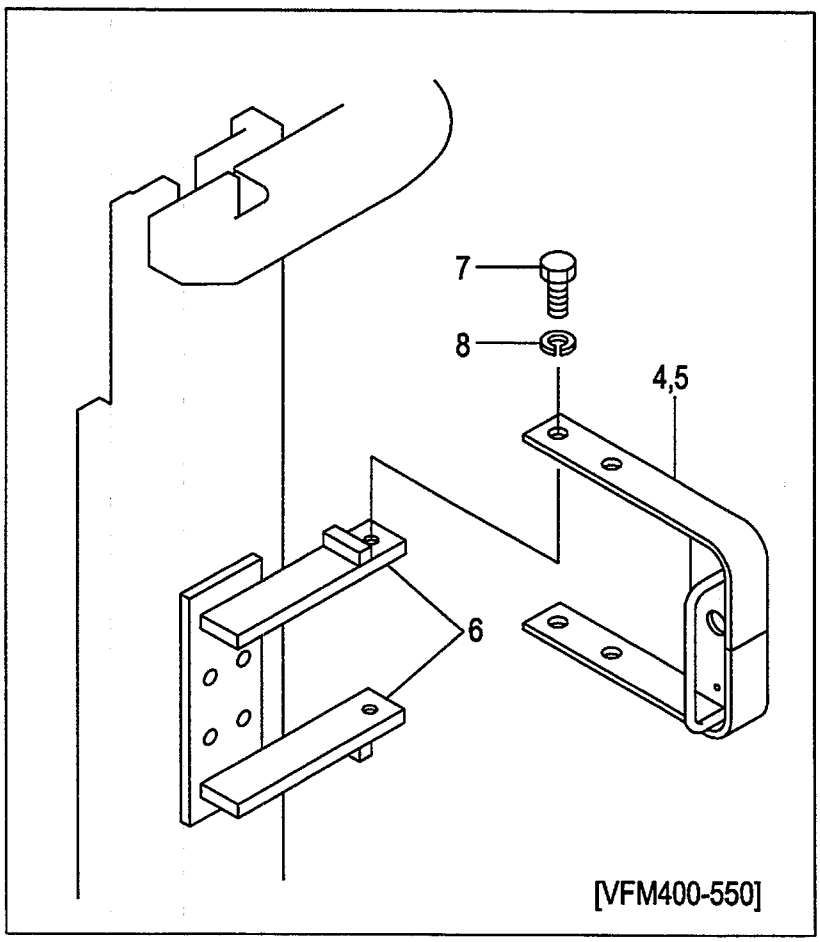

A:AP221F(VFHM/J)

Item No	Part No.	Mark	Description		Req'd	Remarks : Serial No.
12	534A9-22301	+	PLATE	ﾌﾟﾚｰﾄ	2	[(AR4,AR5,4AP,5AP,ARD,ARE) /VFHM400-550]
-	534A9-22301	+	PLATE	ﾌﾟﾚｰﾄ	2	[(A3R,A4R,A3S,A4S)/VFHM400-550]
13	216G2-40602	+	LAMP,HEAD	ﾗﾝﾌﾟ	2	[AR4][AR5][4AP][5AP][ARD] [ARE] INC.14
-	216G2-40602	+	LAMP,HEAD	ﾗﾝﾌﾟ	2	[A3R][A4R][A3S][A4S] INC.14
14	216G2-40611	+	BULB,12V/55W	ﾊﾞﾙﾌﾞ	1	[AR4][AR5][4AP][5AP][ARD] [ARE][A3R][A4R][A3S][A4S]
15	216G2-40701	+	LAMP,COMBI.,FRONT	ﾗﾝﾌﾟ	2	[AR4][AR5][4AP][5AP][ARD] [ARE] INC.16-18
-	216G2-40701	+	LAMP,COMBI.,FRONT	ﾗﾝﾌﾟ	2	[A3R][A4R][A3S][A4S] INC.16-18
16	216G2-40711	+	BULB,TURN-SIGNAL	ﾊﾞﾙﾌﾞ	1	[AR4][AR5][4AP][5AP][ARD] [ARE][A3R][A4R][A3S][A4S]
17	216G2-40721	+	BULB,12V/10W	ﾊﾞﾙﾌﾞ	1	[AR4][AR5][4AP][5AP][ARD] [ARE][A3R][A4R][A3S][A4S]
18	216G2-40731	+	LENS	ﾚﾝｽﾞ	1	[AR4][AR5][4AP][5AP][ARD] [ARE][A3R][A4R][A3S][A4S]
19	01183-08016	+	BOLT	ﾎﾞﾙﾄ	4	[(AR4,AR5,4AP,5AP,ARD,ARE) /VFHM400-550]
-	01183-08016	+	BOLT	ﾎﾞﾙﾄ	4	[(A3R,A4R,A3S,A4S)/VFHM400-550]
20	534A9-22301	+	PLATE	ﾌﾟﾚｰﾄ	2	[(AR4,AR5,4AP,5AP,ARD,ARE) /VFHM400-550]
-	534A9-22301	+	PLATE	ﾌﾟﾚｰﾄ	2	[(A3R,A4R,A3S,A4S)/VFHM400-550]
21	62469-27001	+	DECAL,CAUTION	ﾃﾞｶﾙ	1	[ARD][ARE][A3S][A4S]

LAMP BRACKET

FIG.157 **[AP221F/HL][AP221F/HL/(4AP,5AP,AR4,AR5)]**

(A502APU0) ﾗﾝﾌﾟﾌﾞﾗｹｯﾄ

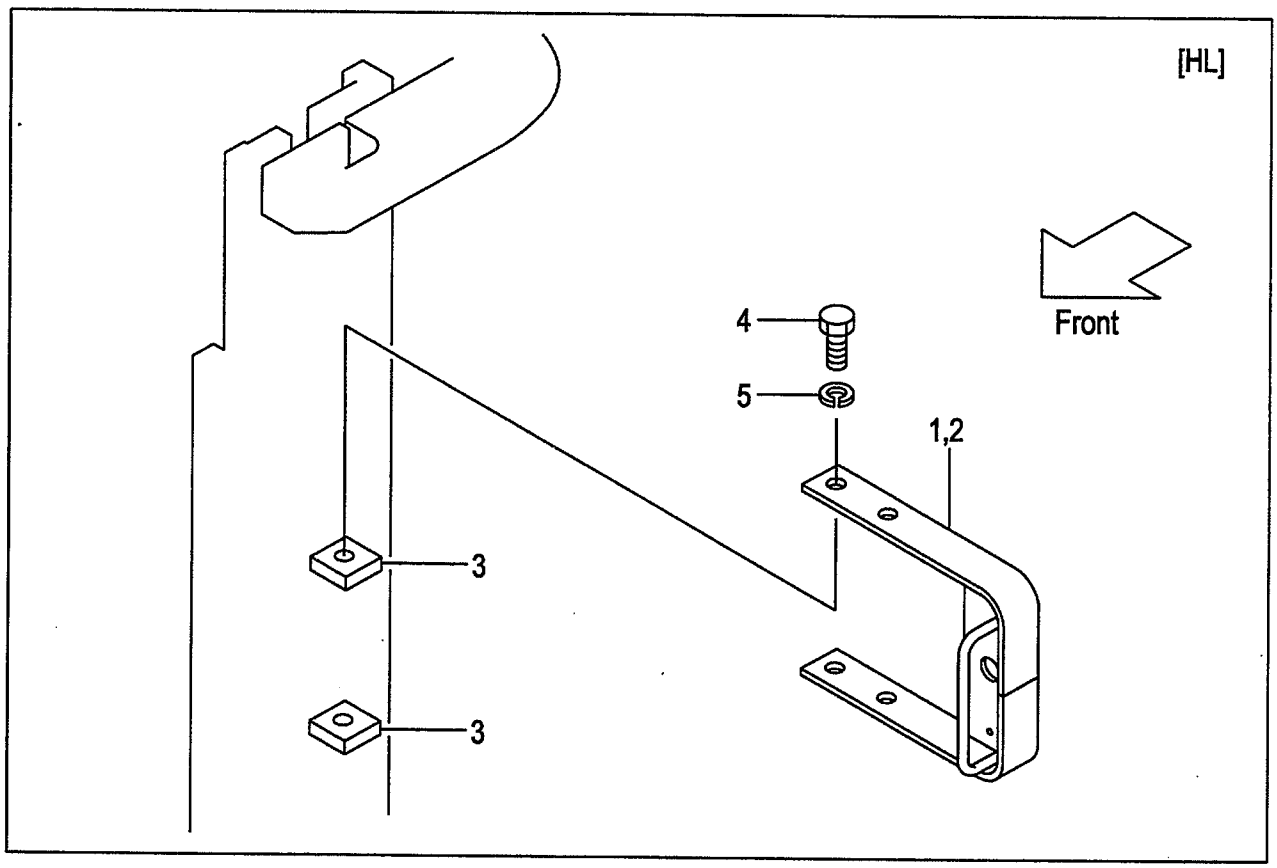

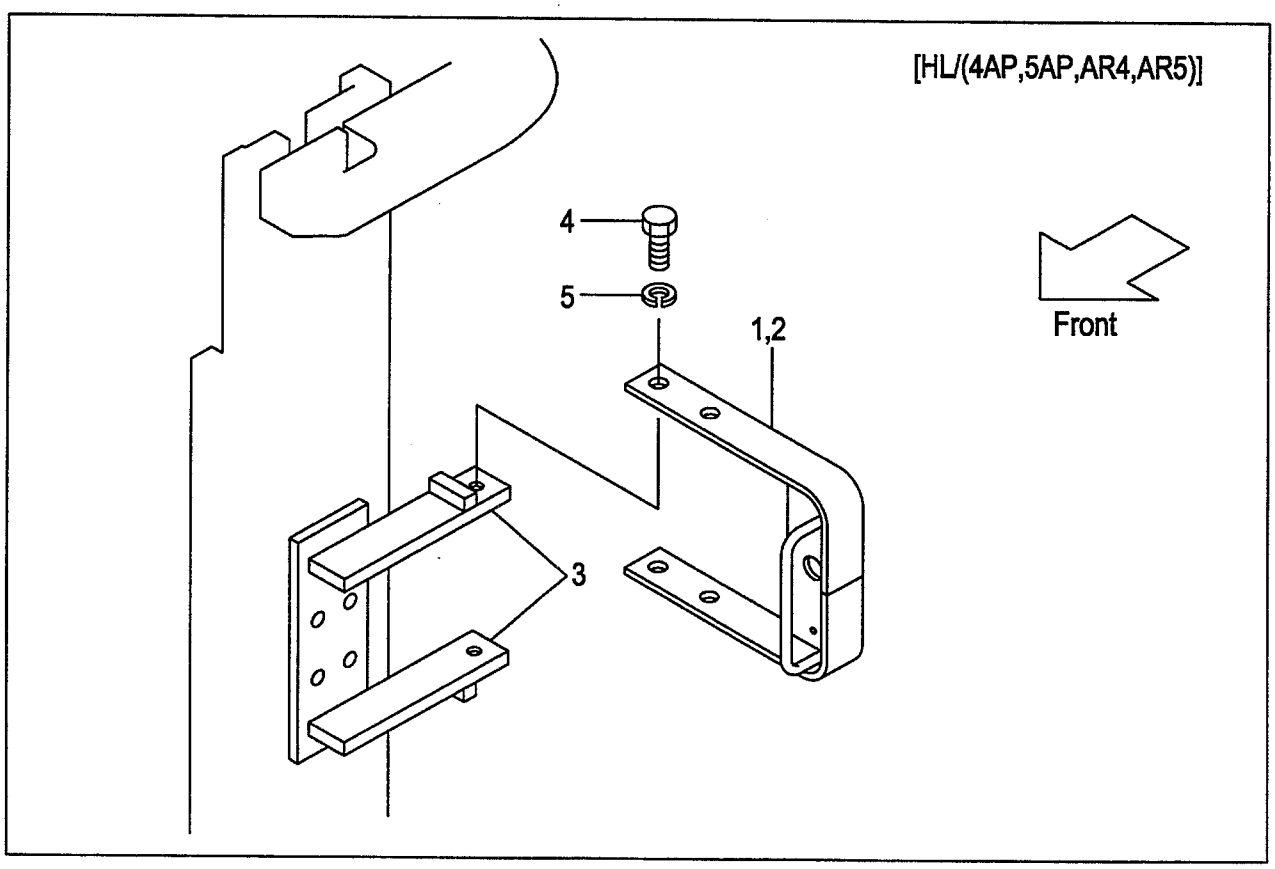

A:AP221F(VFHM/J)

Item No	Part No.	Mark	Description		Req'd	Remarks : Serial No.
1	534A9-22001		BRACKET,RH	ﾌﾞﾗｹｯﾄ	1	[HL]
-	534A9-22001		BRACKET,RH	ﾌﾞﾗｹｯﾄ	1	[HL/(4AP,5AP,AR4,AR5)]
2	534A9-22011		BRACKET,LH	ﾌﾞﾗｹｯﾄ	1	[HL]
-	534A9-22011		BRACKET,LH	ﾌﾞﾗｹｯﾄ	1	[HL/(4AP,5AP,AR4,AR5)]
3	534A9-22101		BRACKET,HL	ﾌﾞﾗｹｯﾄ	4	[HL]
-	621B0-12641		BRACKET,HL	ﾌﾞﾗｹｯﾄ	4	[HL/(4AP,5AP,AR4,AR5)]
4	01100-12020		BOLT	ﾎﾞﾙﾄ	4	[HL]
-	01100-12020		BOLT	ﾎﾞﾙﾄ	4	[HL/(4AP,5AP,AR4,AR5)]
5	02010-00012		WASHER	ﾜｯｼｬ	4	[HL]
-	02010-00012		WASHER	ﾜｯｼｬ	4	[HL/(4AP,5AP,AR4,AR5)]
6	534A9-22201	+	WIRE-HARNESS,HG	ﾜｲﾔﾊｰﾈｽ	2	[HL/VFHM360-400]
-	534A9-22201	+	WIRE-HARNESS,HG	ﾜｲﾔﾊｰﾈｽ	2	[HL/(4AP,5AP,AR4,AR5) /VFHM360-435]
-	534A9-22211	+	WIRE-HARNESS,HG	ﾜｲﾔﾊｰﾈｽ	2	[HL/VFHM435-750]
-	534A9-22211	+	WIRE-HARNESS,HG	ﾜｲﾔﾊｰﾈｽ	2	[HL/(4AP,5AP,AR4,AR5) /VFHM480-750]
7	27732-42221	+	CLAMP	ｸﾗﾝﾌﾟ	2	[HL]
-	27732-42221	+	CLAMP	ｸﾗﾝﾌﾟ	2	[HL/(4AP,5AP,AR4,AR5)]
8	04913-11380	+	BAND	ﾊﾞﾝﾄﾞ	4	[HL]
-	04913-11380	+	BAND	ﾊﾞﾝﾄﾞ	4	[HL/(4AP,5AP,AR4,AR5) /VFHM360-435]
-	04913-11380	+	BAND	ﾊﾞﾝﾄﾞ	6	[HL/(4AP,5AP,AR4,AR5) /VFHM480-750]
9	534A9-22301	+	PLATE	ﾌﾟﾚｰﾄ	2	[HL]
-	534A9-22301	+	PLATE	ﾌﾟﾚｰﾄ	2	[HL/(4AP,5AP,AR4,AR5)]
10	216G2-40602	+	LAMP,HEAD	ﾗﾝﾌﾟ	2	[HL] INC.11
-	216G2-40602	+	LAMP,HEAD	ﾗﾝﾌﾟ	2	[HL/(4AP,5AP,AR4,AR5)] INC.11
11	216G2-40611	+	BULB,12V/55W	ﾊﾞﾙﾌﾞ	1	[HL]
-	216G2-40611	+	BULB,12V/55W	ﾊﾞﾙﾌﾞ	1	[HL/(4AP,5AP,AR4,AR5)]
12	216G2-40701	+	LAMP,COMBI.,FRONT	ﾗﾝﾌﾟ	2	[HL] INC.13-15
-	216G2-40701	+	LAMP,COMBI.,FRONT	ﾗﾝﾌﾟ	2	[HL/(4AP,5AP,AR4,AR5)] INC.13-15
13	216G2-40711	+	BULB,TURN-SIGNAL	ﾊﾞﾙﾌﾞ	1	[HL]
-	216G2-40711	+	BULB,TURN-SIGNAL	ﾊﾞﾙﾌﾞ	1	[HL/(4AP,5AP,AR4,AR5)]
14	216G2-40721	+	BULB,12V/10W	ﾊﾞﾙﾌﾞ	1	[HL]
-	216G2-40721	+	BULB,12V/10W	ﾊﾞﾙﾌﾞ	1	[HL/(4AP,5AP,AR4,AR5)]
15	216G2-40731	+	LENS	ﾚﾝｽﾞ	1	[HL]
-	216G2-40731	+	LENS	ﾚﾝｽﾞ	1	[HL/(4AP,5AP,AR4,AR5)]
16	01183-08016	+	BOLT & WASHER	ﾎﾞﾙﾄ&ﾜｯｼｬ	4	[HL]
-	01183-08016	+	BOLT & WASHER	ﾎﾞﾙﾄ&ﾜｯｼｬ	4	[HL/(4AP,5AP,AR4,AR5)]

LAMP BRACKET

FIG.158 **[AP221F/BKH][AP221F/BKH/(4AP,5AP,AR4,AR5)]**

(A502APW0) ﾗﾝﾌﾟﾌﾞﾗｹｯﾄ

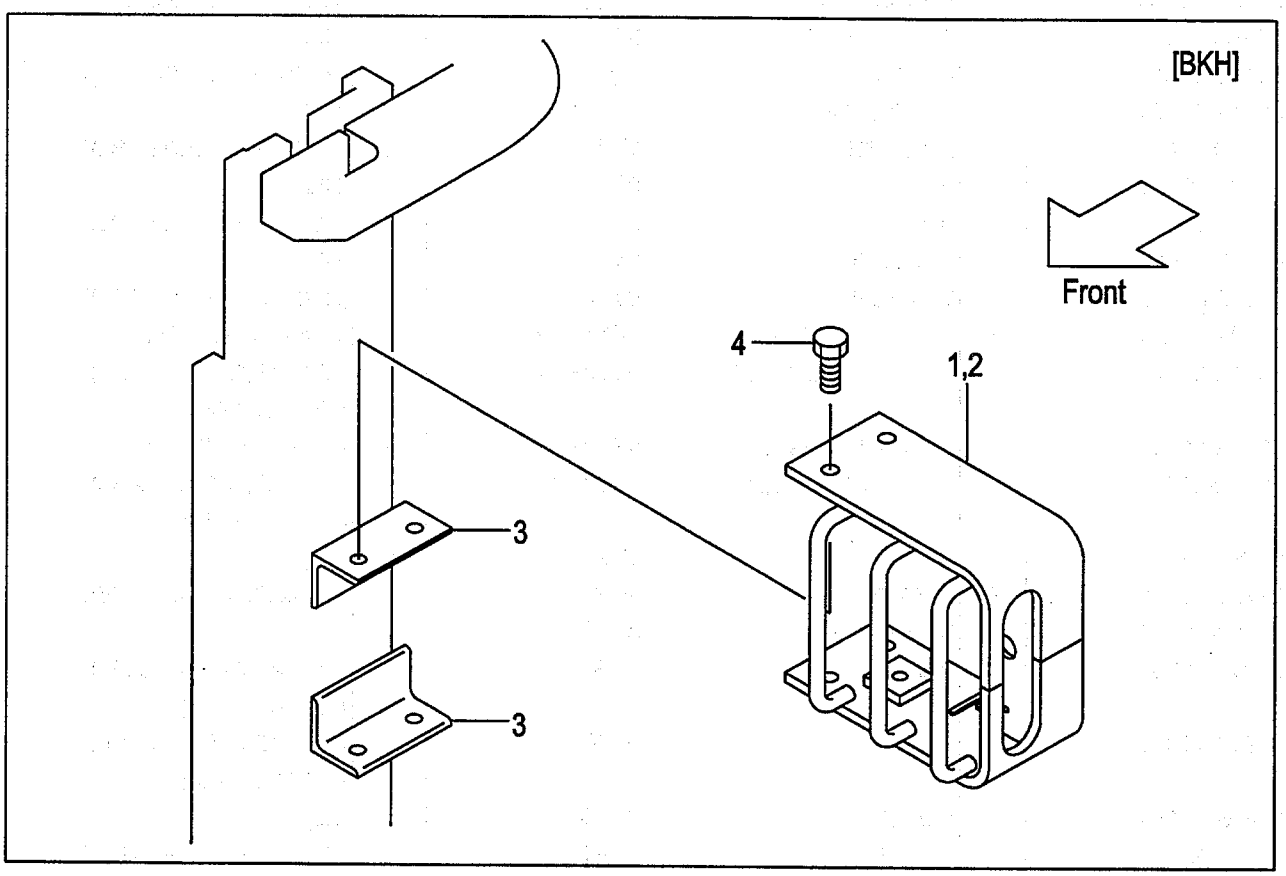

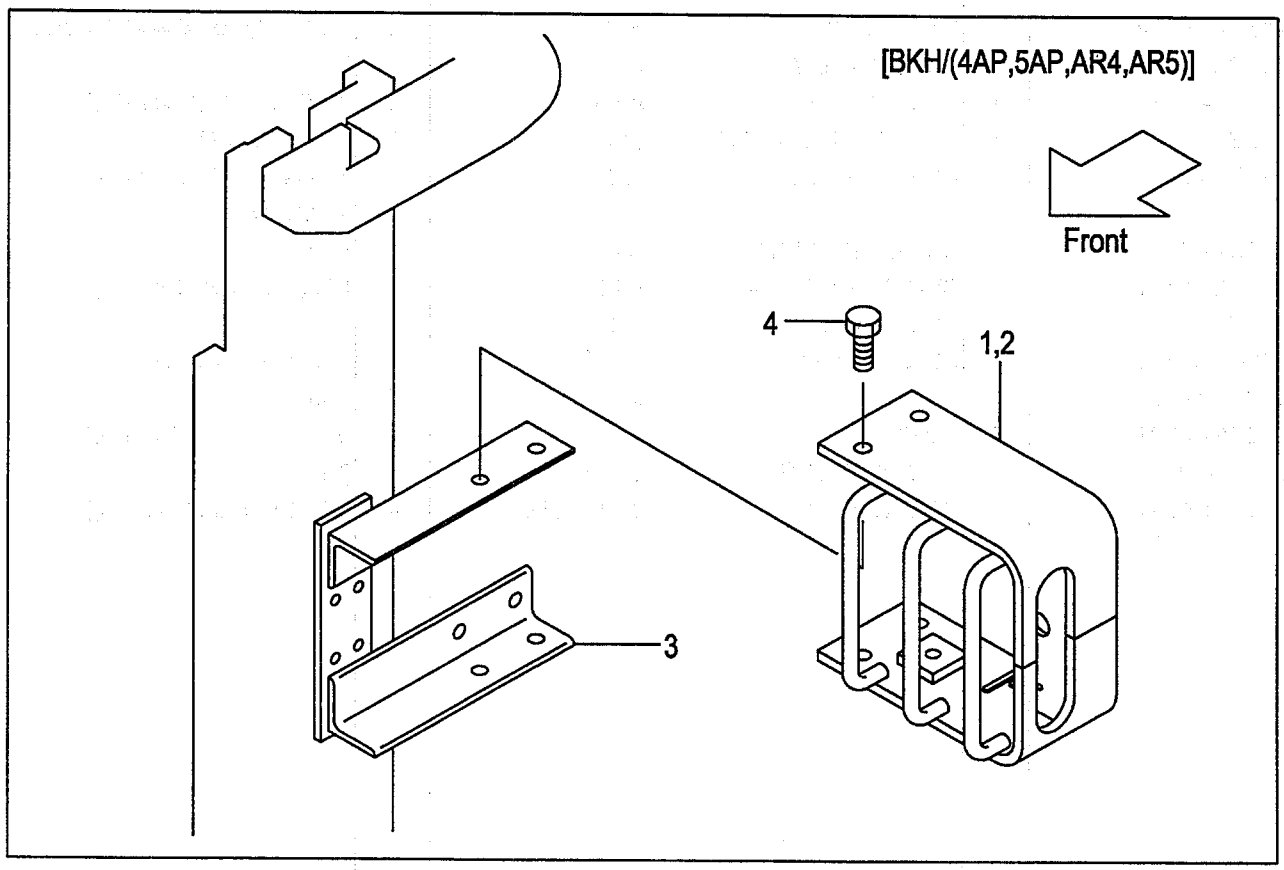

A:AP221F(VFHM/J)

Item No	Part No.	Mark	Description		Req'd	Remarks : Serial No.
1	534A4-22001		GUARD,RH	ｶﾞｰﾄﾞ	1	[BKH]
-	534A4-22001		GUARD,RH	ｶﾞｰﾄﾞ	1	[BKH/(4AP,5AP,AR4,AR5)]
2	534A4-22011		GUARD,LH	ｶﾞｰﾄﾞ	1	[BKH]
-	534A4-22011		GUARD,LH	ｶﾞｰﾄﾞ	1	[BKH/(4AP,5AP,AR4,AR5)]
3	534A4-22101		BRACKET,BKH	ﾌﾞﾗｹｯﾄ	4	[BKH]
-	621B0-12651		BRACKET,BKH	ﾌﾞﾗｹｯﾄ	4	[BKH/(4AP,5AP,AR4,AR5)]
4	01184-12020		BOLT	ﾎﾞﾙﾄ	8	[BKH]
-	01184-12020		BOLT	ﾎﾞﾙﾄ	8	[BKH/(4AP,5AP,AR4,AR5)]
5	534A9-22201	+	WIRE-HARNESS,HG	ﾜｲﾔﾊｰﾈｽ	2	[BKH/VFHM360-400]
-	534A9-22201	+	WIRE-HARNESS,HG	ﾜｲﾔﾊｰﾈｽ	2	[BKH/(4AP,5AP,AR4,AR5) /VFHM360-435]
-	534A9-22211	+	WIRE-HARNESS,HG	ﾜｲﾔﾊｰﾈｽ	2	[BKH/VFHM435-750]
-	534A9-22211	+	WIRE-HARNESS,HG	ﾜｲﾔﾊｰﾈｽ	2	[BKH/(4AP,5AP,AR4,AR5) /VFHM480-750]
6	27732-42221	+	CLAMP	ｸﾗﾝﾌﾟ	2	[BKH]
-	27732-42221	+	CLAMP	ｸﾗﾝﾌﾟ	2	[BKH/(4AP,5AP,AR4,AR5)]
7	04913-11380	+	BAND	ﾊﾞﾝﾄﾞ	4	[BKH]
-	04913-11380	+	BAND	ﾊﾞﾝﾄﾞ	4	[BKH/(4AP,5AP,AR4,AR5) /VFHM360-435]
-	04913-11380	+	BAND	ﾊﾞﾝﾄﾞ	6	[BKH/(4AP,5AP,AR4,AR5) /VFHM480-750]
8	534A9-22301	+	PLATE	ﾌﾟﾚｰﾄ	2	[BKH]
-	534A9-22301	+	PLATE	ﾌﾟﾚｰﾄ	2	[BKH/(4AP,5AP,AR4,AR5) /VFHM250-600]
9	216G2-40602	+	LAMP,HEAD	ﾗﾝﾌﾟ	2	[BKH] INC.10
-	216G2-40602	+	LAMP,HEAD	ﾗﾝﾌﾟ	2	[BKH/(4AP,5AP,AR4,AR5)] INC.10
10	216G2-40611	+	BULB,12V/55W	ﾊﾞﾙﾌﾞ	1	[BKH]
-	216G2-40611	+	BULB,12V/55W	ﾊﾞﾙﾌﾞ	1	[BKH/(4AP,5AP,AR4,AR5)]
11	216G2-40701	+	LAMP,COMBI.,FRONT	ﾗﾝﾌﾟ	2	[BKH] INC.12-14
-	216G2-40701	+	LAMP,COMBI.,FRONT	ﾗﾝﾌﾟ	2	[BKH/(4AP,5AP,AR4,AR5)] INC.12-14
12	216G2-40711	+	BULB,TURN-SIGNAL	ﾊﾞﾙﾌﾞ	1	[BKH]
-	216G2-40711	+	BULB,TURN-SIGNAL	ﾊﾞﾙﾌﾞ	1	[BKH/(4AP,5AP,AR4,AR5)]
13	216G2-40721	+	BULB,12V/10W	ﾊﾞﾙﾌﾞ	1	[BKH]
-	216G2-40721	+	BULB,12V/10W	ﾊﾞﾙﾌﾞ	1	[BKH/(4AP,5AP,AR4,AR5)]
14	216G2-40731	+	LENS	ﾚﾝｽﾞ	1	[BKH]
-	216G2-40731	+	LENS	ﾚﾝｽﾞ	1	[BKH/(4AP,5AP,AR4,AR5)]
15	01183-08016	+	BOLT & WASHER	ﾎﾞﾙﾄ&ﾜｯｼｬ	4	[BKH]
-	01183-08016	+	BOLT & WASHER	ﾎﾞﾙﾄ&ﾜｯｼｬ	4	[BKH/(4AP,5AP,AR4,AR5)]

LAMP BKT.[AP221F/HLG]

FIG.159 [AP221F/HLG/(4AP,5AP,A3R,A4R,AR4,AR5)]

(A502APX0) ﾗﾝﾌﾟﾌﾞﾗｹｯﾄ

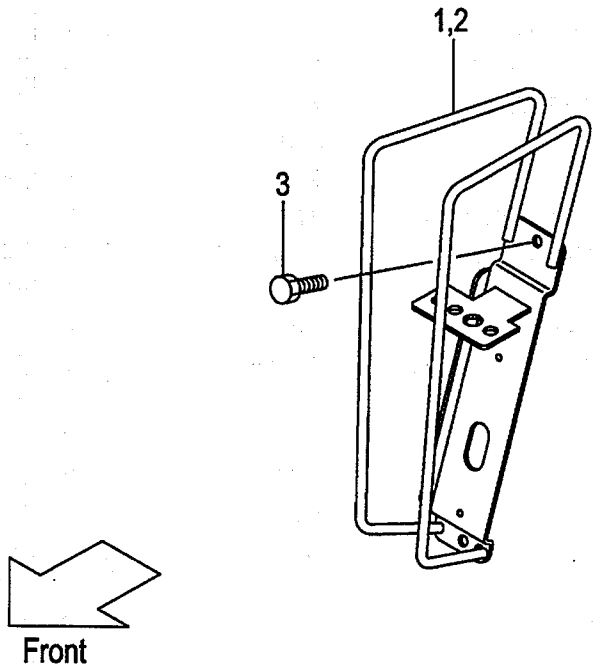

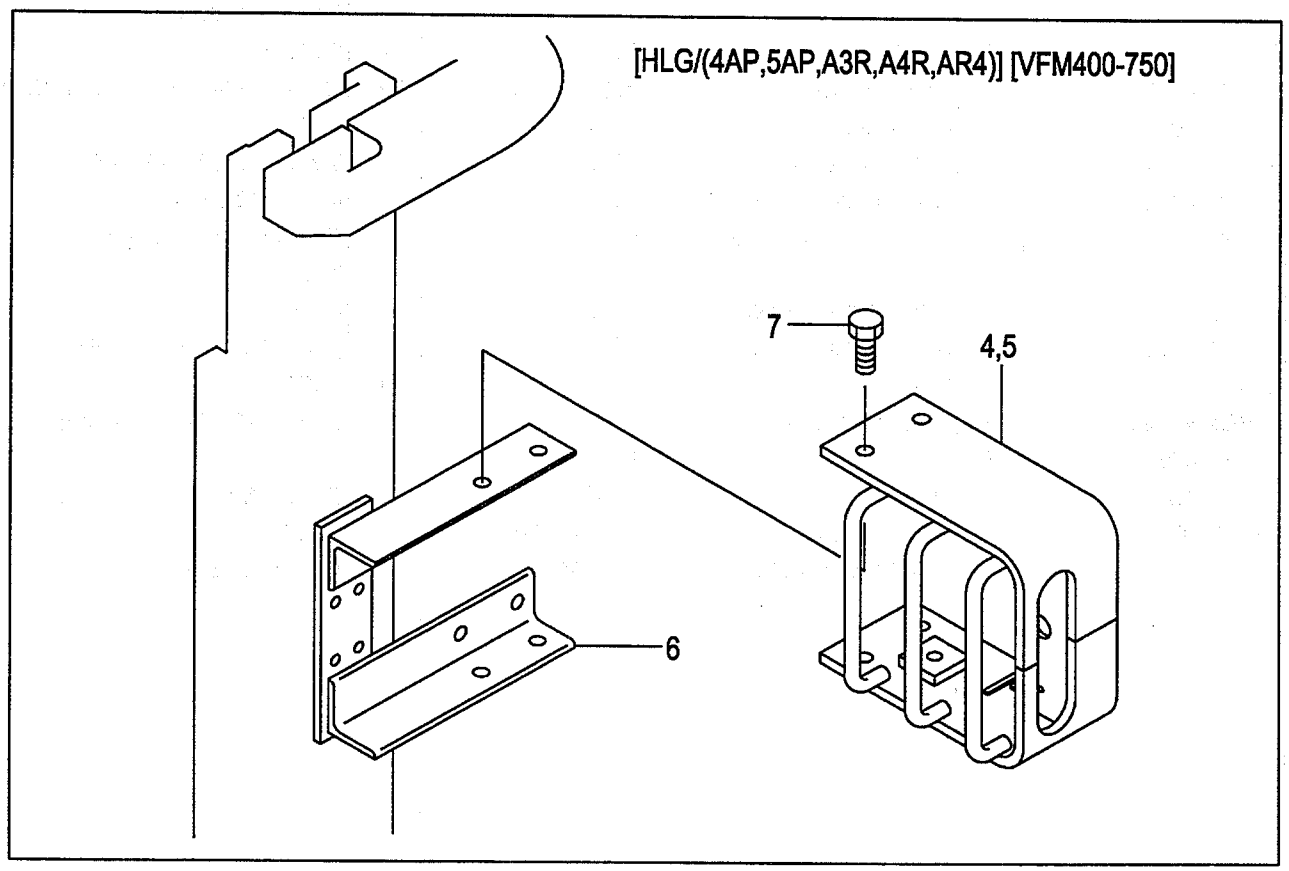

A:AP221F(VFHM/J)

Item No	Part No.	Mark	Description		Req'd	Remarks : Serial No.
1	539A5-12041		GUARD,LAMP,RH	ｶﾞｰﾄﾞ	1	[HLG]
-	539A5-12041		GUARD,LAMP,RH	ｶﾞｰﾄﾞ	1	[HLG/ (4AP,5AP,A3R,A4R,AR4,AR5) /(VFHM360,600-750)]
2	539A5-12011		GUARD,LAMP,LH	ｶﾞｰﾄﾞ	1	[HLG]
-	539A5-12011		GUARD,LAMP,LH	ｶﾞｰﾄﾞ	1	[HLG/ (4AP,5AP,A3R,A4R,AR4,AR5) /(VFHM360,600-750)]
3	01183-08016		BOLT & WASHER	ﾎﾞﾙﾄ&ﾜｯｼｬ	4	[HLG]
-	01183-08016	+	BOLT & WASHER	ﾎﾞﾙﾄ&ﾜｯｼｬ	4	[HLG/ (4AP,5AP,A3R,A4R,AR4,AR5) /(VFHM360,600-750)]
4	534A4-22001		GUARD,RH	ｶﾞｰﾄﾞ	1	[HLG/ (4AP,5AP,A3R,A4R,AR4,AR5) /VFHM400-550]
5	534A4-22011		GUARD,LH	ｶﾞｰﾄﾞ	1	[HLG/ (4AP,5AP,A3R,A4R,AR4,AR5) /VFHM400-550]
6	621B0-12651		BRACKET,BKH	ﾌﾞﾗｹｯﾄ	4	[HLG/ (4AP,5AP,A3R,A4R,AR4,AR5) /VFHM400-550]
7	01184-12020		BOLT	ﾎﾞﾙﾄ	8	[HLG/ (4AP,5AP,A3R,A4R,AR4,AR5) /VFHM400-550]
8	239A2-42221	+	WIRE-HARNESS,HG	ﾜｲﾔﾊｰﾈｽ	2	[HLG]
-	239A2-42221	+	WIRE-HARNESS,HG	ﾜｲﾔﾊｰﾈｽ	2	[HLG/ (4AP,5AP,A3R,A4R,AR4,AR5) /(VFHM360,600-750)]
-	534A9-22201	+	WIRE-HARNESS,HG	ﾜｲﾔﾊｰﾈｽ	2	[HLG/ (4AP,5AP,A3R,A4R,AR4,AR5) /VFHM400-435]
-	534A9-22211	+	WIRE-HARNESS,HG	ﾜｲﾔﾊｰﾈｽ	2	[HLG/ (4AP,5AP,A3R,A4R,AR4,AR5) /VFHM480-550]
9	27732-42221	+	CLAMP	ｸﾗﾝﾌﾟ	2	[HLG/ (4AP,5AP,A3R,A4R,AR4,AR5) /VFHM400-550]
10	04913-11100	+	BAND	ﾊﾞﾝﾄﾞ	2	[HLG]
-	04913-11100	+	BAND	ﾊﾞﾝﾄﾞ	2	[HLG/ (4AP,5AP,A3R,A4R,AR4,AR5) /(VFHM360,600-750)]
-	04913-11380	+	BAND	ﾊﾞﾝﾄﾞ	4	[HLG/ (4AP,5AP,A3R,A4R,AR4,AR5) /VFHM400-550]
11	534A9-22301	+	PLATE	ﾌﾟﾚｰﾄ	2	[HLG/ (4AP,5AP,A3R,A4R,AR4,AR5) /VFHM400-550]
12	216G2-40602	+	LAMP,HEAD	ﾗﾝﾌﾟ	2	[HLG] INC.13

LAMP BKT.[AP221F/HLG]

FIG.159 [AP221F/HLG/(4AP,5AP,A3R,A4R,AR4,AR5)]

(A502APX0) ﾗﾝﾌﾟﾌﾞﾗｹｯﾄ

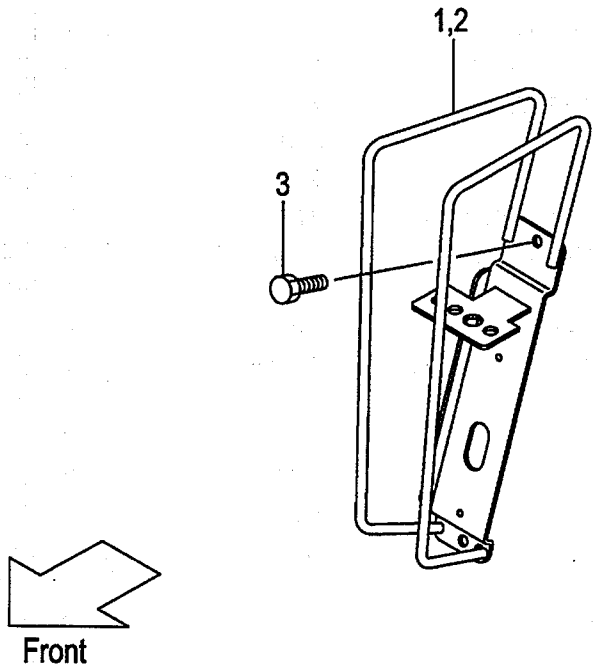

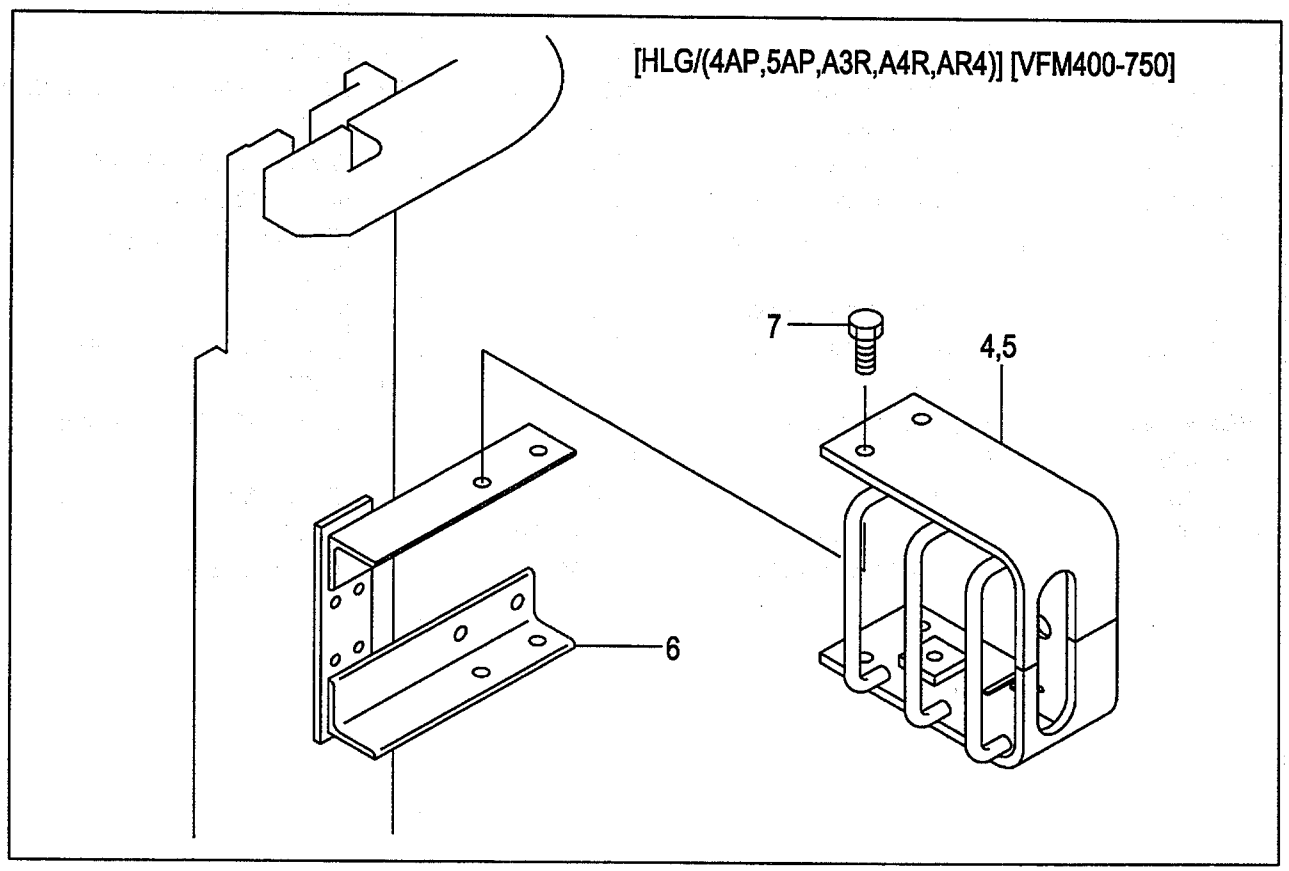

A:AP221F(VFHM/J)

Item No	Part No.	Mark	Description		Req'd	Remarks : Serial No.
-	216G2-40602	+	LAMP,HEAD	ﾗﾝﾌﾟ	2	[HLG/ (4AP,5AP,A3R,A4R,AR4,AR5)] INC.13
13	216G2-40611	+	BULB,12V/55W	ﾊﾞﾙﾌﾞ	1	[HLG]
-	216G2-40611	+	BULB,12V/55W	ﾊﾞﾙﾌﾞ	1	[HLG/ (4AP,5AP,A3R,A4R,AR4,AR5)]
14	216G2-40701	+	LAMP,COMBI.,FRONT	ﾗﾝﾌﾟ	2	[HLG] INC.15-17
-	216G2-40701	+	LAMP,COMBI.,FRONT	ﾗﾝﾌﾟ	2	[HLG/ (4AP,5AP,A3R,A4R,AR4,AR5)] INC.15-17
15	216G2-40711	+	BULB,TURN-SIGNAL	ﾊﾞﾙﾌﾞ	1	[HLG]
-	216G2-40711	+	BULB,TURN-SIGNAL	ﾊﾞﾙﾌﾞ	1	[HLG/ (4AP,5AP,A3R,A4R,AR4,AR5)]
16	216G2-40721	+	BULB,12V/10W	ﾊﾞﾙﾌﾞ	1	[HLG]
-	216G2-40721	+	BULB,12V/10W	ﾊﾞﾙﾌﾞ	1	[HLG/ (4AP,5AP,A3R,A4R,AR4,AR5)]
17	216G2-40731	+	LENS	ﾚﾝｽﾞ	1	[HLG]
-	216G2-40731	+	LENS	ﾚﾝｽﾞ	1	[HLG/ (4AP,5AP,A3R,A4R,AR4,AR5)]
18	01183-08016	+	BOLT & WASHER	ﾎﾞﾙﾄ&ﾜｯｼｬ	4	[HLG/ (4AP,5AP,A3R,A4R,AR4,AR5) /VFHM400-550]

FIG.160 HYDRAULIC LINE (CONTROL VALVE-CONNECTOR)

(A503AP10) ﾊｲﾄﾞﾛﾘｯｸﾗｲﾝ (ｺﾝﾄﾛｰﾙﾊﾞﾙﾌﾞ-ｺﾈｸﾀ)

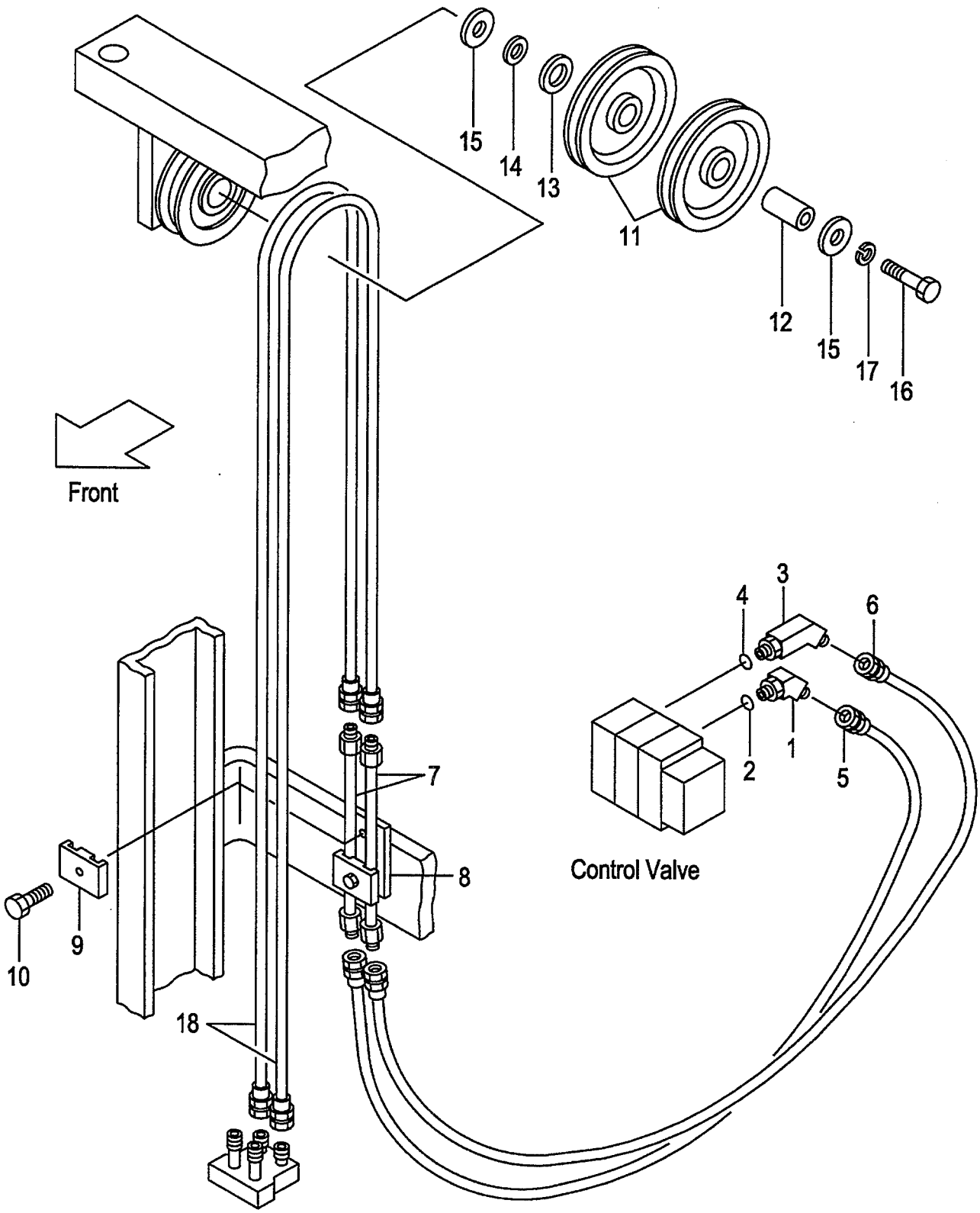

A:AP031F(VM/J)

Item No	Part No.	Mark	Description		Req'd	Remarks : Serial No.
A1	62160-10021		ELBOW-ASSY	ｴﾙﾎﾞｱｯｾﾝ	1	INC.1,2
1	63130-12071		ELBOW	ｴﾙﾎﾞ	1	
2	03320-00140		O-RING	Oﾘﾝｸﾞ	1	
A2	62160-10001		ELBOW-ASSY	ｴﾙﾎﾞｱｯｾﾝ	1	INC.3,4
3	62160-10011		ELBOW	ｴﾙﾎﾞ	1	
4	03320-00140		O-RING	Oﾘﾝｸﾞ	1	
5	62160-12302		HOSE	ﾎｰｽ	1	
6	62160-12312		HOSE	ﾎｰｽ	1	
7	63160-12401		PIPE	ﾊﾟｲﾌﾟ	2	
8	63680-12411		BRACKET	ﾌﾞﾗｹｯﾄ	1	
9	63810-12081		BAND	ﾊﾞﾝﾄﾞ	2	
10	01184-10035		BOLT	ﾎﾞﾙﾄ	2	
11	63130-15301		PULLEY	ﾌﾟｰﾘ	2	
12	62050-12301		COLLAR	ｶﾗｰ	1	
13	62050-12331		SPACER	ｽﾍﾟｰｻ	1	
14	62050-12021		SPACER	ｽﾍﾟｰｻ	1	
15	62150-12211		SPACER	ｽﾍﾟｰｻ	2	
16	01100-16085		BOLT	ﾎﾞﾙﾄ	1	
17	02010-00016		WASHER	ﾜｯｼｬ	1	
18	04601-33163		HOSE VM200	ﾎｰｽ	2	
-	04601-33187		HOSE VM225	ﾎｰｽ	2	
-	04601-33212		HOSE VM250	ﾎｰｽ	2	
-	04601-33231		HOSE VM270	ﾎｰｽ	2	
-	04601-33236		HOSE VM275	ﾎｰｽ	2	
-	04601-33261		HOSE VM300	ﾎｰｽ	2	
-	04601-33285		HOSE VM325	ﾎｰｽ	2	
-	04601-33290		HOSE VM330	ﾎｰｽ	2	
-	04601-33310		HOSE VM350	ﾎｰｽ	2	
-	04601-33325		HOSE VM366	ﾎｰｽ	2	
-	04601-33329		HOSE VM370	ﾎｰｽ	2	
-	04601-33334		HOSE VM375	ﾎｰｽ	2	
-	04601-33368		HOSE VM400	ﾎｰｽ	2	
-	04601-33393		HOSE VM425	ﾎｰｽ	2	
-	04601-33417		HOSE VM450	ﾎｰｽ	2	
-	04601-33442		HOSE VM475	ﾎｰｽ	2	
-	04601-33466		HOSE VM500	ﾎｰｽ	2	
-	04601-33526		HOSE VM550	ﾎｰｽ	2	
-	04601-33576		HOSE VM600	ﾎｰｽ	2	
19	62469-27001	+	DECAL,CAUTION	ﾃﾞｶﾙ	1	

FIG.161 HYDRAULIC LINE (CONTROL VALVE-CONNECTOR)[AP4,4AP]

(A503AP20) ﾊｲﾄﾞﾛﾘｯｸﾗｲﾝ (ｺﾝﾄﾛｰﾙﾊﾞﾙﾌﾞ-ｺﾈｸﾀ)

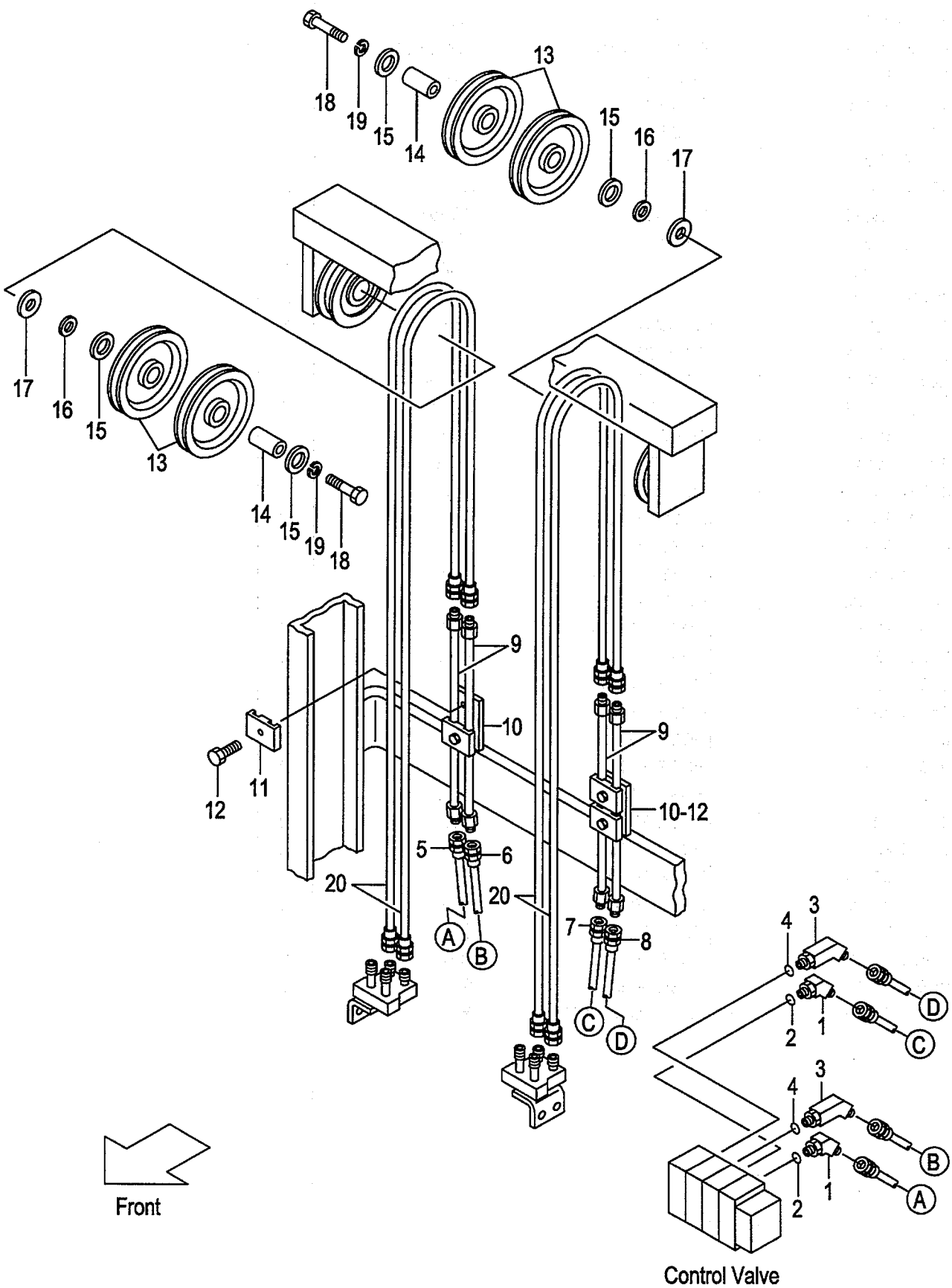

A:AP031F(VM/J)

Item No	Part No.	Mark	Description		Req'd	Remarks : Serial No.
A1	62160-10021		ELBOW-ASSY	ｴﾙﾎﾞｱｯｾﾝ	2	[AP4][4AP] INC.1,2
1	63130-12071		ELBOW	ｴﾙﾎﾞ	2	[AP4][4AP]
2	03320-00140		O-RING	Oﾘﾝｸﾞ	2	[AP4][4AP]
A2	62160-10001		ELBOW-ASSY	ｴﾙﾎﾞｱｯｾﾝ	2	[AP4][4AP] INC.3,4
3	62160-10011		ELBOW	ｴﾙﾎﾞ	2	[AP4][4AP]
4	03320-00140		O-RING	Oﾘﾝｸﾞ	2	[AP4][4AP]
5	62160-12302		HOSE	ﾎｰｽ	1	[AP4][4AP]
6	62160-12312		HOSE	ﾎｰｽ	1	[AP4][4AP]
7	62150-12522		HOSE	ﾎｰｽ	1	[AP4][4AP]
8	62150-12532		HOSE	ﾎｰｽ	1	[AP4][4AP]
9	63160-12401		PIPE	ﾊﾟｲﾌﾟ	4	[AP4][4AP]
10	63680-12411		BRACKET	ﾌﾞﾗｹｯﾄ	2	[AP4][4AP]
11	63810-12081		BAND	ﾊﾞﾝﾄﾞ	4	[AP4][4AP]
12	01184-10035		BOLT	ﾎﾞﾙﾄ	4	[AP4][4AP]
13	63130-15301		PULLEY	ﾌﾟｰﾘ	4	[AP4][4AP]
14	62050-12301		COLLAR	ｶﾗｰ	2	[AP4][4AP]
15	62050-12331		SPACER	ｽﾍﾟｰｻ	2	[AP4][4AP]
16	62050-12021		SPACER	ｽﾍﾟｰｻ	2	[AP4][4AP]
17	62150-12211		SPACER	ｽﾍﾟｰｻ	4	[AP4][4AP]
18	01100-16085		BOLT	ﾎﾞﾙﾄ	2	[AP4][4AP]
19	02010-00016		WASHER	ﾜｯｼｬ	2	[AP4][4AP]
20	04601-33163		HOSE VM200	ﾎｰｽ	4	[AP4][4AP]
-	04601-33187		HOSE VM225	ﾎｰｽ	4	[AP4][4AP]
-	04601-33212		HOSE VM250	ﾎｰｽ	4	[AP4][4AP]
-	04601-33231		HOSE VM270	ﾎｰｽ	4	[AP4][4AP]
-	04601-33236		HOSE VM275	ﾎｰｽ	4	[AP4][4AP]
-	04601-33261		HOSE VM300	ﾎｰｽ	4	[AP4][4AP]
-	04601-33285		HOSE VM325	ﾎｰｽ	4	[AP4][4AP]
-	04601-33290		HOSE VM330	ﾎｰｽ	4	[AP4][4AP]
-	04601-33310		HOSE VM350	ﾎｰｽ	4	[AP4][4AP]
-	04601-33325		HOSE VM366	ﾎｰｽ	4	[AP4][4AP]
-	04601-33329		HOSE VM370	ﾎｰｽ	4	[AP4][4AP]
-	04601-33334		HOSE VM375	ﾎｰｽ	4	[AP4][4AP]
-	04601-33368		HOSE VM400	ﾎｰｽ	4	[AP4][4AP]
-	04601-33393		HOSE VM425	ﾎｰｽ	4	[AP4][4AP]
-	04601-33417		HOSE VM450	ﾎｰｽ	4	[AP4][4AP]
-	04601-33442		HOSE VM475	ﾎｰｽ	4	[AP4][4AP]
-	04601-33466		HOSE VM500	ﾎｰｽ	4	[AP4][4AP]
-	04601-33526		HOSE VM550	ﾎｰｽ	4	[AP4][4AP]
-	04601-33576		HOSE VM600	ﾎｰｽ	4	[AP4][4AP]
21	62469-27001	+	DECAL,CAUTION	ﾃﾞｶﾙ	1	[AP4][4AP]

HYDRAULIC LINE
FIG.162 (CONTROL VALVE-CONNECTOR)[AP5,5AP]
(A503AP30) ﾊｲﾄﾞﾛﾘｯｸﾗｲﾝ (ｺﾝﾄﾛｰﾙﾊﾞﾙﾌﾞ-ｺﾈｸﾀ)

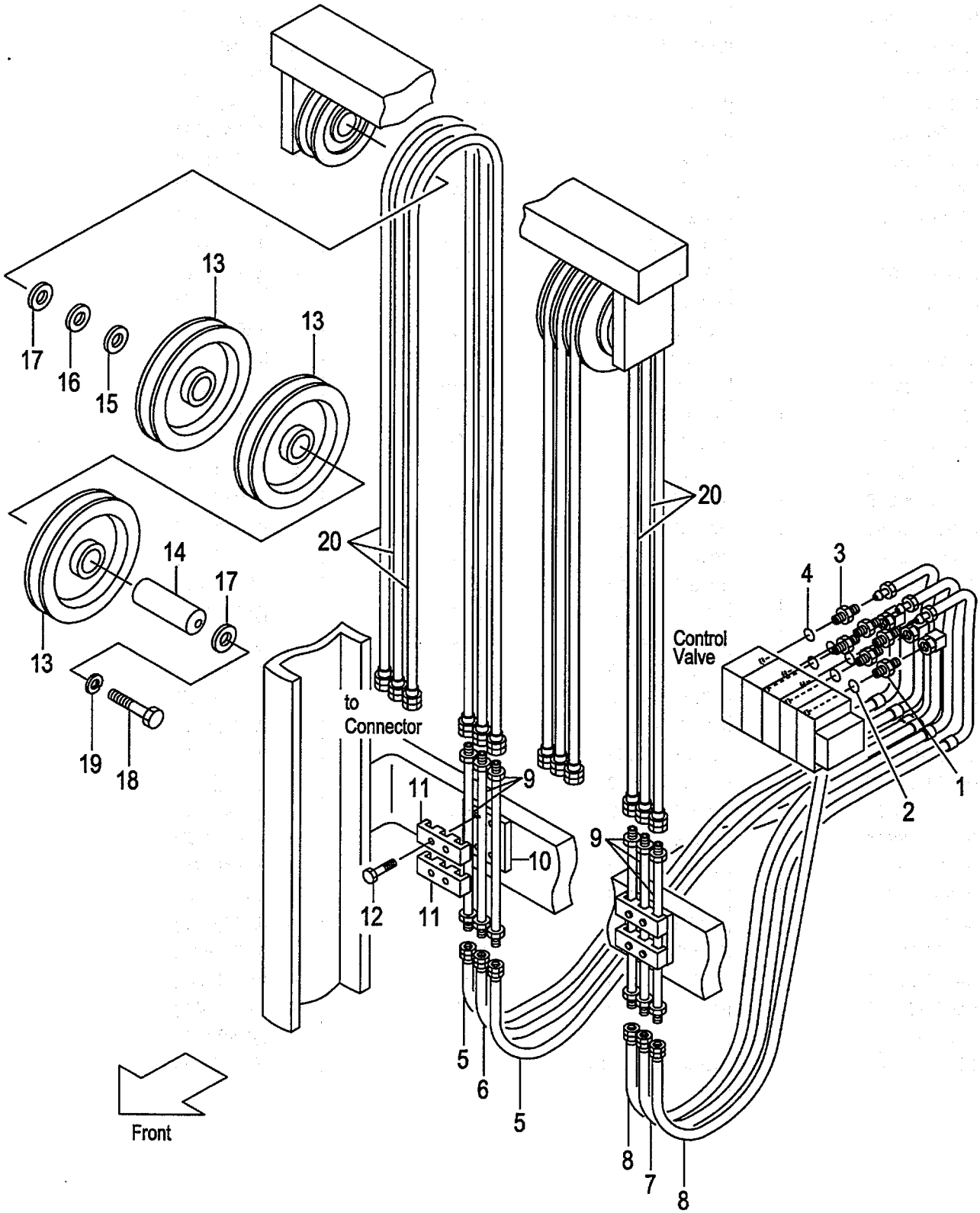

A:AP031F(VM/J)

Item No	Part No.	Mark	Description		Req'd	Remarks : Serial No.
A1	62160-10021		ELBOW-ASSY	ｴﾙﾎﾞｱｯｾﾝ	3	[AP5][5AP] INC.1,2
1	63130-12071		ELBOW	ｴﾙﾎﾞ	3	[AP5][5AP]
2	03320-00140		O-RING	Oﾘﾝｸﾞ	3	[AP5][5AP]
A2	62160-10001		ELBOW-ASSY	ｴﾙﾎﾞｱｯｾﾝ	3	[AP5][5AP] INC.3,4
3	62160-10011		ELBOW	ｴﾙﾎﾞ	3	[AP5][5AP]
4	03320-00140		O-RING	Oﾘﾝｸﾞ	3	[AP5][5AP]
5	62160-12302		HOSE	ﾎｰｽ	2	[AP5][5AP]
6	62160-12312		HOSE	ﾎｰｽ	1	[AP5][5AP]
7	62150-12522		HOSE	ﾎｰｽ	1	[AP5][5AP]
8	62150-12532		HOSE	ﾎｰｽ	2	[AP5][5AP]
9	63160-12401		PIPE	ﾊﾟｲﾌﾟ	6	[AP5][5AP]
10	62150-12241		BRACKET	ﾌﾞﾗｹｯﾄ	2	[AP5][5AP]
11	62150-12231		BAND	ﾊﾞﾝﾄﾞ	4	[AP5][5AP]
12	01184-10035		BOLT	ﾎﾞﾙﾄ	8	[AP5][5AP]
13	63130-15301		PULLEY	ﾌﾟｰﾘ	6	[AP5][5AP]
14	62050-12321		COLLAR	ｶﾗｰ	2	[AP5][5AP]
15	62050-12331		SPACER	ｽﾍﾟｰｻ	2	[AP5][5AP]
16	62050-12021		SPACER	ｽﾍﾟｰｻ	2	[AP5][5AP]
17	62150-12211		SPACER	ｽﾍﾟｰｻ	4	[AP5][5AP]
18	01100-16115		BOLT	ﾎﾞﾙﾄ	2	[AP5][5AP]
19	02010-00016		WASHER	ﾜｯｼｬ	2	[AP5][5AP]
20	04601-33163		HOSE VM200	ﾎｰｽ	6	[AP5][5AP]
-	04601-33187		HOSE VM225	ﾎｰｽ	6	[AP5][5AP]
-	04601-33212		HOSE VM250	ﾎｰｽ	6	[AP5][5AP]
-	04601-33231		HOSE VM270	ﾎｰｽ	6	[AP5][5AP]
-	04601-33236		HOSE VM275	ﾎｰｽ	6	[AP5][5AP]
-	04601-33261		HOSE VM300	ﾎｰｽ	6	[AP5][5AP]
-	04601-33285		HOSE VM325	ﾎｰｽ	6	[AP5][5AP]
-	04601-33290		HOSE VM330	ﾎｰｽ	6	[AP5][5AP]
-	04601-33310		HOSE VM350	ﾎｰｽ	6	[AP5][5AP]
-	04601-33325		HOSE VM366	ﾎｰｽ	6	[AP5][5AP]
-	04601-33329		HOSE VM370	ﾎｰｽ	6	[AP5][5AP]
-	04601-33334		HOSE VM375	ﾎｰｽ	6	[AP5][5AP]
-	04601-33368		HOSE VM400	ﾎｰｽ	6	[AP5][5AP]
-	04601-33393		HOSE VM425	ﾎｰｽ	6	[AP5][5AP]
-	04601-33417		HOSE VM450	ﾎｰｽ	6	[AP5][5AP]
-	04601-33442		HOSE VM475	ﾎｰｽ	6	[AP5][5AP]
-	04601-33466		HOSE VM500	ﾎｰｽ	6	[AP5][5AP]
-	04601-33526		HOSE VM550	ﾎｰｽ	6	[AP5][5AP]
-	04601-33576		HOSE VM600	ﾎｰｽ	6	[AP5][5AP]
21	62469-27001	+	DECAL,CAUTION	ﾃﾞｶﾙ	1	[AP5][5AP]

HYDRAULIC LINE
FIG.163 (CONTROL VALVE-CONNECTOR)[4AP,HFW]

(A503AP40) ﾊｲﾄﾞﾛﾘｯｸﾗｲﾝ (ｺﾝﾄﾛｰﾙﾊﾞﾙﾌﾞ-ｺﾈｸﾀ)

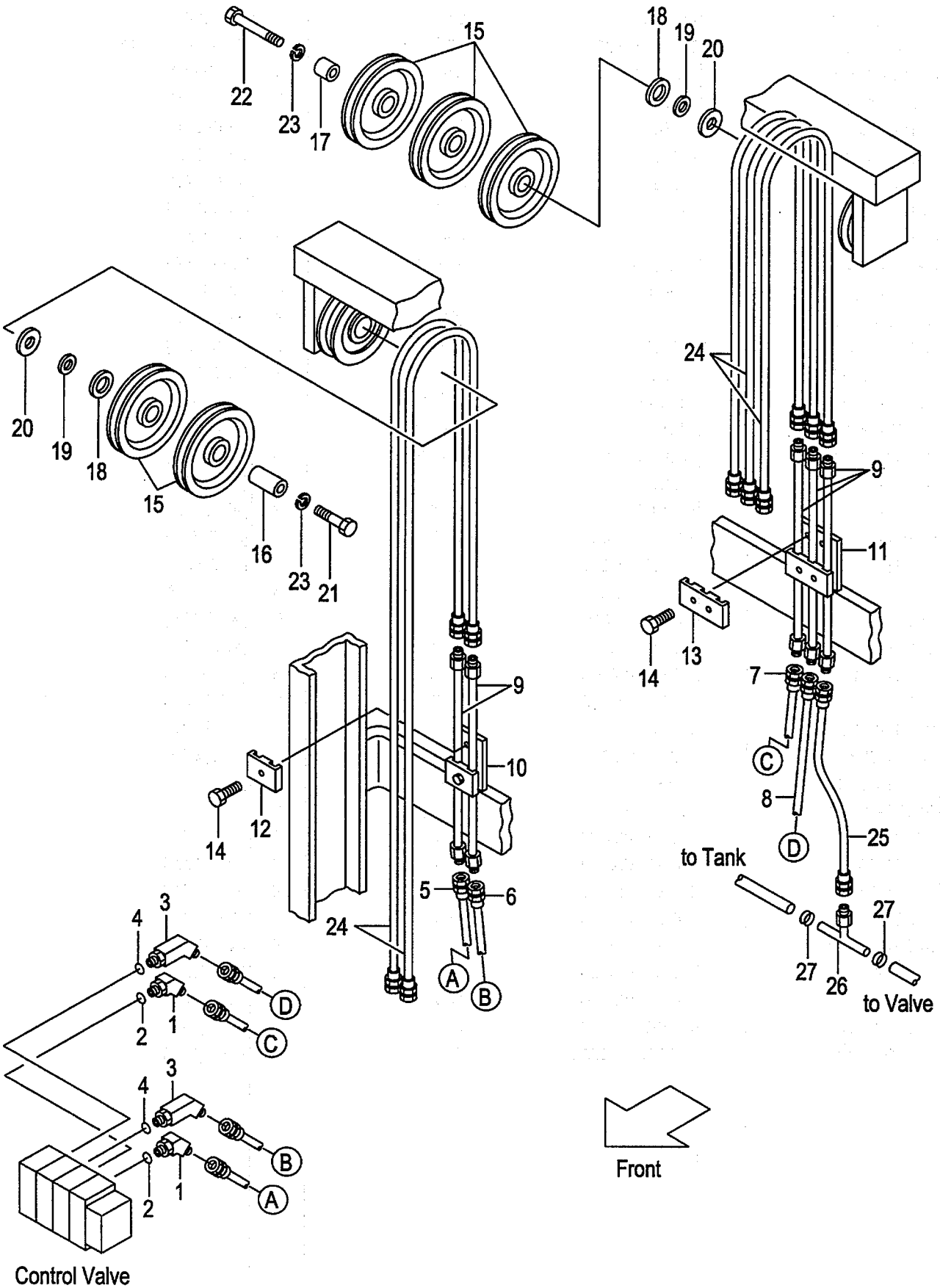

A:AP031F(VM/J)

Item No	Part No.	Mark	Description		Req'd	Remarks : Serial No.
A1	62160-10021		ELBOW-ASSY	ｴﾙﾎﾞｱｯｾﾝ	2	[4AP][HFW] INC.1,2
1	63130-12071		ELBOW	ｴﾙﾎﾞ	2	[4AP][HFW]
2	03320-00140		O-RING	Oﾘﾝｸﾞ	2	[4AP][HFW]
A2	62160-10001		ELBOW-ASSY	ｴﾙﾎﾞｱｯｾﾝ	2	[4AP][HFW] INC.3,4
3	62160-10011		ELBOW	ｴﾙﾎﾞ	2	[4AP][HFW]
4	03320-00140		O-RING	Oﾘﾝｸﾞ	2	[4AP][HFW]
5	62160-12302		HOSE	ﾎｰｽ	1	[4AP][HFW]
6	62160-12312		HOSE	ﾎｰｽ	1	[4AP][HFW]
7	62150-12522		HOSE	ﾎｰｽ	1	[4AP][HFW]
8	62150-12532		HOSE	ﾎｰｽ	1	[4AP][HFW]
9	63160-12401		PIPE	ﾊﾟｲﾌﾟ	5	[4AP][HFW]
10	63680-12411		BRACKET	ﾌﾞﾗｹｯﾄ	1	[4AP][HFW]
11	62150-12241		BRACKET	ﾌﾞﾗｹｯﾄ	1	[4AP][HFW]
12	63810-12081		BAND	ﾊﾞﾝﾄﾞ	2	[4AP][HFW]
13	62150-12231		BAND	ﾊﾞﾝﾄﾞ	2	[4AP][HFW]
14	01184-10035		BOLT	ﾎﾞﾙﾄ	6	[4AP][HFW]
15	63130-15301		PULLEY	ﾌﾟｰﾘ	5	[4AP][HFW]
16	62050-12301		COLLAR	ｶﾗｰ	1	[4AP][HFW]
17	62050-12321		COLLAR	ｶﾗｰ	1	[4AP][HFW]
18	62050-12331		SPACER	ｽﾍﾟｰｻ	2	[4AP][HFW]
19	62050-12021		SPACER	ｽﾍﾟｰｻ	2	[4AP][HFW]
20	62150-12211		SPACER	ｽﾍﾟｰｻ	4	[4AP][HFW]
21	01100-16085		BOLT	ﾎﾞﾙﾄ	1	[4AP][HFW]
22	01100-16115		BOLT	ﾎﾞﾙﾄ	1	[4AP][HFW]
23	02010-00016		WASHER	ﾜｯｼｬ	2	[4AP][HFW]
24	04601-33163		HOSE VM200	ﾎｰｽ	5	[4AP][HFW]
-	04601-33187		HOSE VM225	ﾎｰｽ	5	[4AP][HFW]
-	04601-33212		HOSE VM250	ﾎｰｽ	5	[4AP][HFW]
-	04601-33231		HOSE VM270	ﾎｰｽ	5	[4AP][HFW]
-	04601-33236		HOSE VM275	ﾎｰｽ	5	[4AP][HFW]
-	04601-33261		HOSE VM300	ﾎｰｽ	5	[4AP][HFW]
-	04601-33285		HOSE VM325	ﾎｰｽ	5	[4AP][HFW]
-	04601-33290		HOSE VM330	ﾎｰｽ	5	[4AP][HFW]
-	04601-33310		HOSE VM350	ﾎｰｽ	5	[4AP][HFW]
-	04601-33325		HOSE VM366	ﾎｰｽ	5	[4AP][HFW]
-	04601-33329		HOSE VM370	ﾎｰｽ	5	[4AP][HFW]
-	04601-33334		HOSE VM375	ﾎｰｽ	5	[4AP][HFW]
-	04601-33368		HOSE VM400	ﾎｰｽ	5	[4AP][HFW]
-	04601-33393		HOSE VM425	ﾎｰｽ	5	[4AP][HFW]
-	04601-33417		HOSE VM450	ﾎｰｽ	5	[4AP][HFW]
-	04601-33442		HOSE VM475	ﾎｰｽ	5	[4AP][HFW]
-	04601-33466		HOSE VM500	ﾎｰｽ	5	[4AP][HFW]
-	04601-33526		HOSE VM550	ﾎｰｽ	5	[4AP][HFW]
-	04601-33576		HOSE VM600	ﾎｰｽ	5	[4AP][HFW]
25	04451-03050		HOSE	ﾎｰｽ	1	[4AP][HFW]
26	62150-14011		PIPE	ﾊﾟｲﾌﾟ	1	[4AP][HFW]
27	63110-20261		CLIP	ｸﾘｯﾌﾟ	2	[4AP][HFW]
28	62469-27001	+	DECAL,CAUTION	ﾃﾞｶﾙ	1	[4AP][HFW]

HYDRAULIC LINE
FIG.164 (CONTROL VALVE-CONNECTOR)[4AP,PPC]
(A503AP50) ﾊｲﾄﾞﾛﾘｯｸﾗｲﾝ (ｺﾝﾄﾛｰﾙﾊﾞﾙﾌﾞ-ｺﾈｸﾀ)

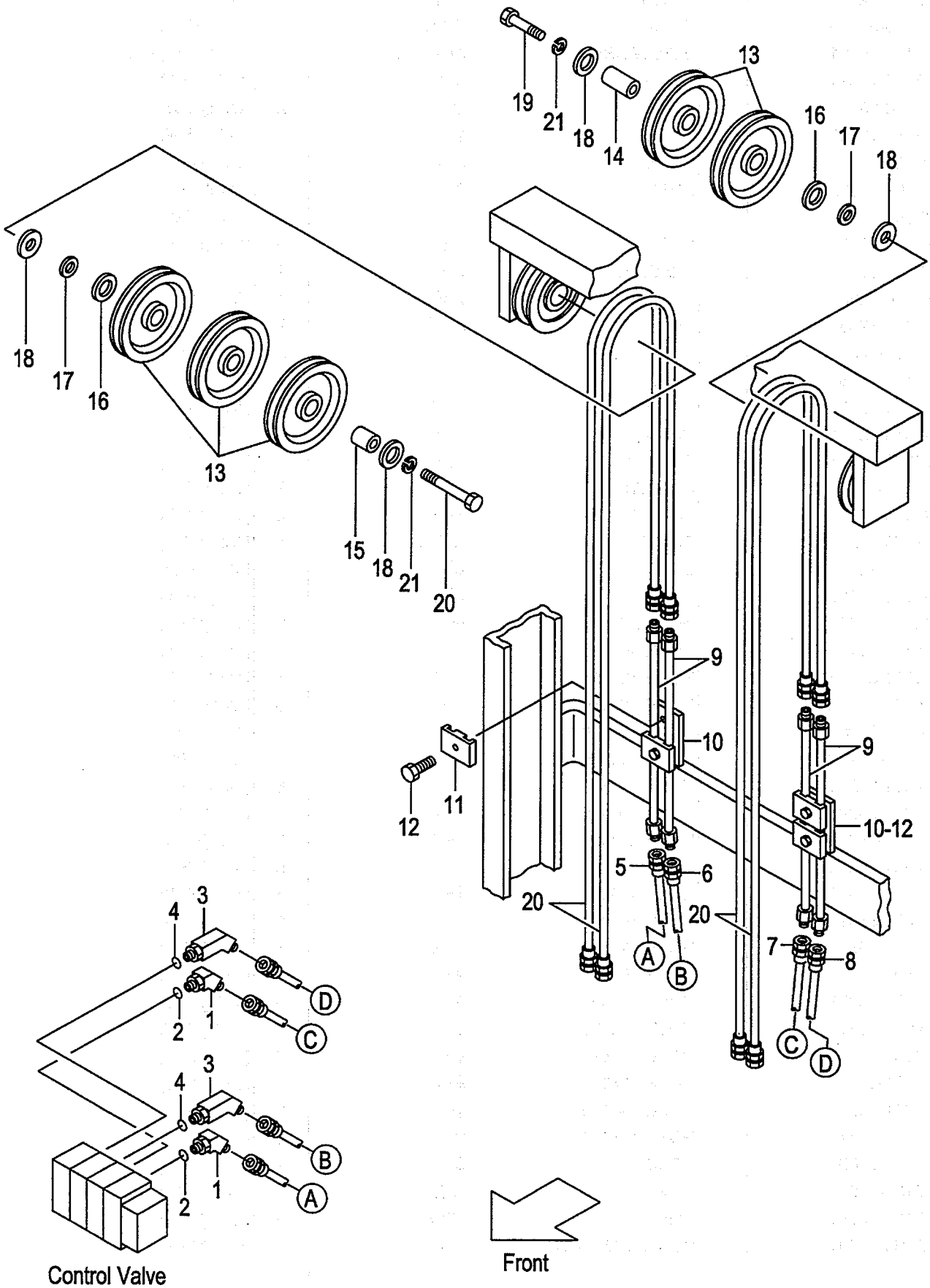

A:AP031F(VM/J)

Item No	Part No.	Mark	Description		Req'd	Remarks : Serial No.
A1	62160-10021		ELBOW-ASSY	ｴﾙﾎﾞｱｯｾﾝ	2	[4AP][PPC] INC.1,2
1	63130-12071		ELBOW	ｴﾙﾎﾞ	2	[4AP][PPC]
2	03320-00140		O-RING	Oﾘﾝｸﾞ	2	[4AP][PPC]
A2	62160-10001		ELBOW-ASSY	ｴﾙﾎﾞｱｯｾﾝ	2	[4AP][PPC] INC.3,4
3	62160-10011		ELBOW	ｴﾙﾎﾞ	2	[4AP][PPC]
4	03320-00140		O-RING	Oﾘﾝｸﾞ	2	[4AP][PPC]
5	62160-12302		HOSE	ﾎｰｽ	1	[4AP][PPC]
6	62160-12312		HOSE	ﾎｰｽ	1	[4AP][PPC]
7	62150-12522		HOSE	ﾎｰｽ	1	[4AP][PPC]
8	62150-12532		HOSE	ﾎｰｽ	1	[4AP][PPC]
9	63160-12401		PIPE	ﾊﾟｲﾌﾟ	4	[4AP][PPC]
10	63680-12411		BRACKET	ﾌﾞﾗｹｯﾄ	1	[4AP][PPC]
11	63810-12081		BAND	ﾊﾞﾝﾄﾞ	4	[4AP][PPC]
12	01184-10035		BOLT	ﾎﾞﾙﾄ	4	[4AP][PPC]
13	63130-15301		PULLEY	ﾌﾟｰﾘ	5	[4AP][PPC]
14	62050-12301		COLLAR	ｶﾗｰ	1	[4AP][PPC]
15	62050-12321		COLLAR	ｶﾗｰ	1	[4AP][PPC]
16	62050-12331		SPACER	ｽﾍﾟｰｻ	2	[4AP][PPC]
17	62050-12021		SPACER	ｽﾍﾟｰｻ	2	[4AP][PPC]
18	62150-12211		SPACER	ｽﾍﾟｰｻ	4	[4AP][PPC]
19	01100-16085		BOLT	ﾎﾞﾙﾄ	1	[4AP][PPC]
20	01100-16115		BOLT	ﾎﾞﾙﾄ	1	[4AP][PPC]
21	02010-00016		WASHER	ﾜｯｼｬ	2	[4AP][PPC]
22	04601-33163		HOSE VM200	ﾎｰｽ	4	[4AP][PPC]
-	04601-33187		HOSE VM225	ﾎｰｽ	4	[4AP][PPC]
-	04601-33212		HOSE VM250	ﾎｰｽ	4	[4AP][PPC]
-	04601-33231		HOSE VM270	ﾎｰｽ	4	[4AP][PPC]
-	04601-33236		HOSE VM275	ﾎｰｽ	4	[4AP][PPC]
-	04601-33261		HOSE VM300	ﾎｰｽ	4	[4AP][PPC]
-	04601-33285		HOSE VM325	ﾎｰｽ	4	[4AP][PPC]
-	04601-33290		HOSE VM330	ﾎｰｽ	4	[4AP][PPC]
-	04601-33310		HOSE VM350	ﾎｰｽ	4	[4AP][PPC]
-	04601-33325		HOSE VM366	ﾎｰｽ	4	[4AP][PPC]
-	04601-33329		HOSE VM370	ﾎｰｽ	4	[4AP][PPC]
-	04601-33334		HOSE VM375	ﾎｰｽ	4	[4AP][PPC]
-	04601-33368		HOSE VM400	ﾎｰｽ	4	[4AP][PPC]
-	04601-33393		HOSE VM425	ﾎｰｽ	4	[4AP][PPC]
-	04601-33417		HOSE VM450	ﾎｰｽ	4	[4AP][PPC]
-	04601-33442		HOSE VM475	ﾎｰｽ	4	[4AP][PPC]
-	04601-33466		HOSE VM500	ﾎｰｽ	4	[4AP][PPC]
-	04601-33526		HOSE VM550	ﾎｰｽ	4	[4AP][PPC]
-	04601-33576		HOSE VM600	ﾎｰｽ	4	[4AP][PPC]
23	62469-27001	+	DECAL,CAUTION	ﾃﾞｶﾙ	1	[4AP][PPC]

HYDRAULIC LINE
FIG.165 (CONTROL VALVE-CONNECTOR)[ACC,PR]
(A503AP60) ﾊｲﾄﾞﾛﾘｯｸﾗｲﾝ (ｺﾝﾄﾛｰﾙﾊﾞﾙﾌﾞ-ｺﾈｸﾀ)

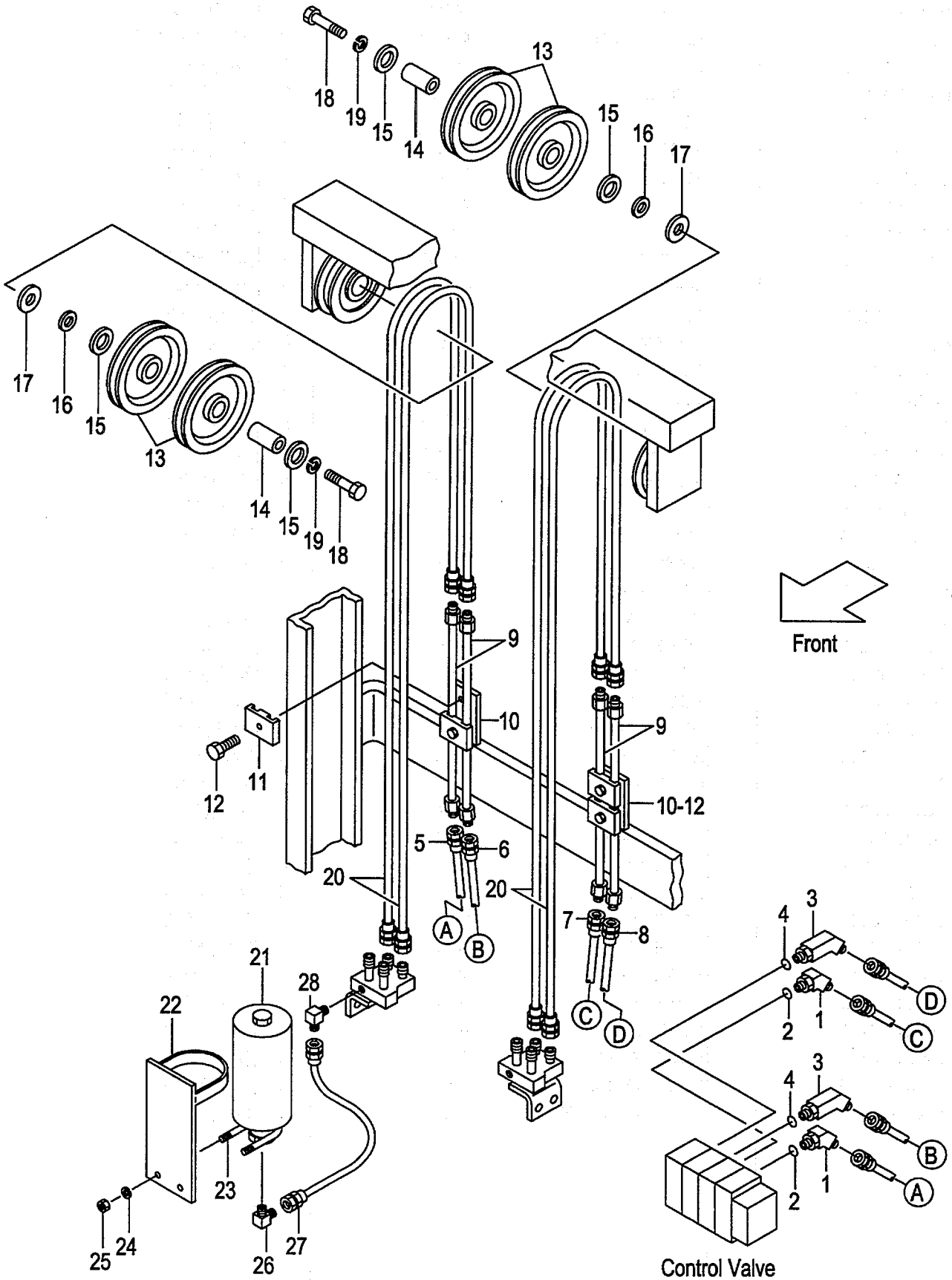

A:AP031F(VM/J)

Item No	Part No.	Mark	Description		Req'd	Remarks : Serial No.
A1	62160-10021		ELBOW-ASSY	ｴﾙﾎﾞｱｯｾﾝ	2	[ACC][PR] INC.1,2
1	63130-12071		ELBOW	ｴﾙﾎﾞ	2	[ACC][PR]
2	03320-00140		O-RING	Oﾘﾝｸﾞ	2	[ACC][PR]
A2	62160-10001		ELBOW-ASSY	ｴﾙﾎﾞｱｯｾﾝ	2	[ACC][PR] INC.3,4
3	62160-10011		ELBOW	ｴﾙﾎﾞ	2	[ACC][PR]
4	03320-00140		O-RING	Oﾘﾝｸﾞ	2	[ACC][PR]
5	62160-12302		HOSE	ﾎｰｽ	1	[ACC][PR]
6	62160-12312		HOSE	ﾎｰｽ	1	[ACC][PR]
7	62150-12522		HOSE	ﾎｰｽ	1	[ACC][PR]
8	62150-12532		HOSE	ﾎｰｽ	1	[ACC][PR]
9	63160-12401		PIPE	ﾊﾟｲﾌﾟ	4	[ACC][PR]
10	63680-12411		BRACKET	ﾌﾞﾗｹｯﾄ	2	[ACC][PR]
11	63810-12081		BAND	ﾊﾞﾝﾄﾞ	4	[ACC][PR]
12	01184-10035		BOLT	ﾎﾞﾙﾄ	4	[ACC][PR]
13	63130-15301		PULLEY	ﾌﾟｰﾘ	4	[ACC][PR]
14	62050-12301		COLLAR	ｶﾗｰ	2	[ACC][PR]
15	62050-12331		SPACER	ｽﾍﾟｰｻ	2	[ACC][PR]
16	62050-12021		SPACER	ｽﾍﾟｰｻ	2	[ACC][PR]
17	62150-12211		SPACER	ｽﾍﾟｰｻ	4	[ACC][PR]
18	01100-16085		BOLT	ﾎﾞﾙﾄ	2	[ACC][PR]
19	02010-00016		WASHER	ﾜｯｼｬ	2	[ACC][PR]
20	04601-33163		HOSE VM200	ﾎｰｽ	4	[ACC][PR]
-	04601-33187		HOSE VM225	ﾎｰｽ	4	[ACC][PR]
-	04601-33212		HOSE VM250	ﾎｰｽ	4	[ACC][PR]
-	04601-33231		HOSE VM270	ﾎｰｽ	4	[ACC][PR]
-	04601-33236		HOSE VM275	ﾎｰｽ	4	[ACC][PR]
-	04601-33261		HOSE VM300	ﾎｰｽ	4	[ACC][PR]
-	04601-33285		HOSE VM325	ﾎｰｽ	4	[ACC][PR]
-	04601-33290		HOSE VM330	ﾎｰｽ	4	[ACC][PR]
-	04601-33310		HOSE VM350	ﾎｰｽ	4	[ACC][PR]
-	04601-33325		HOSE VM366	ﾎｰｽ	4	[ACC][PR]
-	04601-33329		HOSE VM370	ﾎｰｽ	4	[ACC][PR]
-	04601-33334		HOSE VM375	ﾎｰｽ	4	[ACC][PR]
-	04601-33368		HOSE VM400	ﾎｰｽ	4	[ACC][PR]
-	04601-33393		HOSE VM425	ﾎｰｽ	4	[ACC][PR]
-	04601-33417		HOSE VM450	ﾎｰｽ	4	[ACC][PR]
-	04601-33442		HOSE VM475	ﾎｰｽ	4	[ACC][PR]
-	04601-33466		HOSE VM500	ﾎｰｽ	4	[ACC][PR]
-	04601-33526		HOSE VM550	ﾎｰｽ	4	[ACC][PR]
-	04601-33576		HOSE VM600	ﾎｰｽ	4	[ACC][PR]
21	63130-15033		ACCUMULATOR	ｱｷｭﾑﾚｰﾀ	1	[ACC][PR]
22	62150-12561		BRACKET	ﾌﾞﾗｹｯﾄ	1	[ACC][PR]
23	62130-12171		U-BOLT	Uﾎﾞﾙﾄ	1	[ACC][PR]
24	02010-00008		WASHER	ﾜｯｼｬ	2	[ACC][PR]
25	01400-00008		NUT	ﾅｯﾄ	2	[ACC][PR]
26	63110-12181		ELBOW	ｴﾙﾎﾞ	1	[ACC][PR]
27	63130-31040		HOSE	ﾎｰｽ	1	[ACC][PR]
28	53110-12341		ELBOW	ｴﾙﾎﾞ	1	[ACC][PR]
29	62469-27001	+	DECAL,CAUTION	ﾃﾞｶﾙ	1	[ACC][PR]

HYDRAULIC LINE
FIG.166 (CONTROL VALVE-CONNECTOR)[ACC,LG]
(A503AP70) ﾊｲﾄﾞﾛﾘｯｸﾗｲﾝ (ｺﾝﾄﾛｰﾙﾊﾞﾙﾌﾞ-ｺﾈｸﾀ)

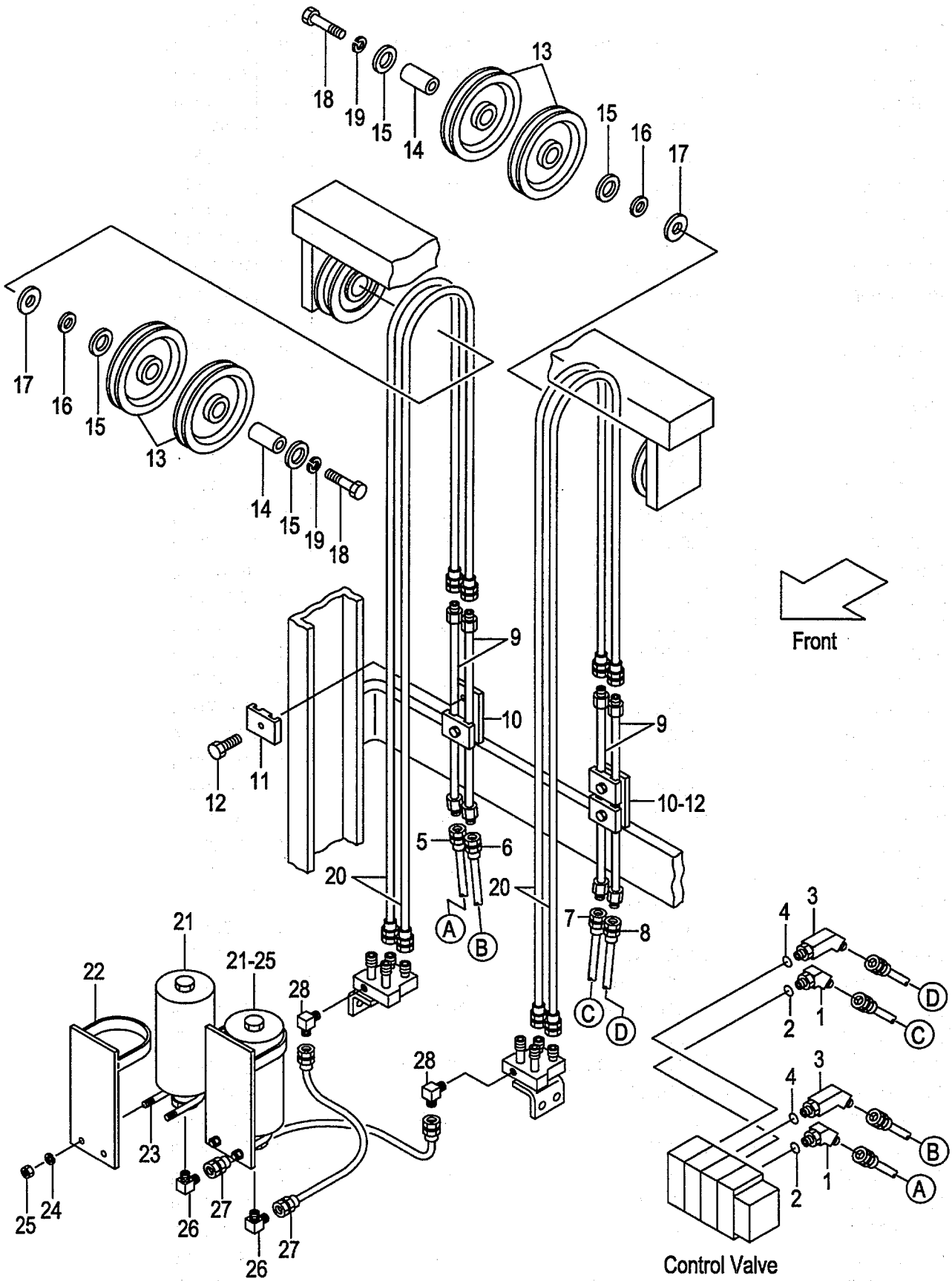

A:AP031F(VM/J)

Item No	Part No.	Mark	Description		Req'd	Remarks : Serial No.
A1	62160-10021		ELBOW-ASSY	ｴﾙﾎﾞｱｯｾﾝ	2	[ACC][LG] INC.1,2
1	63130-12071		ELBOW	ｴﾙﾎﾞ	2	[ACC][LG]
2	03320-00140		O-RING	Oﾘﾝｸﾞ	2	[ACC][LG]
A2	62160-10001		ELBOW-ASSY	ｴﾙﾎﾞｱｯｾﾝ	2	[ACC][LG] INC.3,4
3	62160-10011		ELBOW	ｴﾙﾎﾞ	2	[ACC][LG]
4	03320-00140		O-RING	Oﾘﾝｸﾞ	2	[ACC][LG]
5	62160-12302		HOSE	ﾎｰｽ	1	[ACC][LG]
6	62160-12312		HOSE	ﾎｰｽ	1	[ACC][LG]
7	62150-12522		HOSE	ﾎｰｽ	1	[ACC][LG]
8	62150-12532		HOSE	ﾎｰｽ	1	[ACC][LG]
9	63160-12401		PIPE	ﾊﾟｲﾌﾟ	4	[ACC][LG]
10	63680-12411		BRACKET	ﾌﾞﾗｹｯﾄ	2	[ACC][LG]
11	63810-12081		BAND	ﾊﾞﾝﾄﾞ	4	[ACC][LG]
12	01184-10035		BOLT	ﾎﾞﾙﾄ	4	[ACC][LG]
13	63130-15301		PULLEY	ﾌﾟｰﾘ	4	[ACC][LG]
14	62050-12301		COLLAR	ｶﾗｰ	2	[ACC][LG]
15	62050-12331		SPACER	ｽﾍﾟｰｻ	2	[ACC][LG]
16	62050-12021		SPACER	ｽﾍﾟｰｻ	2	[ACC][LG]
17	62150-12211		SPACER	ｽﾍﾟｰｻ	4	[ACC][LG]
18	01100-16085		BOLT	ﾎﾞﾙﾄ	2	[ACC][LG]
19	02010-00016		WASHER	ﾜｯｼｬ	2	[ACC][LG]
20	04601-33163		HOSE VM200	ﾎｰｽ	4	[ACC][LG]
-	04601-33187		HOSE VM225	ﾎｰｽ	4	[ACC][LG]
-	04601-33212		HOSE VM250	ﾎｰｽ	4	[ACC][LG]
-	04601-33231		HOSE VM270	ﾎｰｽ	4	[ACC][LG]
-	04601-33236		HOSE VM275	ﾎｰｽ	4	[ACC][LG]
-	04601-33261		HOSE VM300	ﾎｰｽ	4	[ACC][LG]
-	04601-33285		HOSE VM325	ﾎｰｽ	4	[ACC][LG]
-	04601-33290		HOSE VM330	ﾎｰｽ	4	[ACC][LG]
-	04601-33310		HOSE VM350	ﾎｰｽ	4	[ACC][LG]
-	04601-33325		HOSE VM366	ﾎｰｽ	4	[ACC][LG]
-	04601-33329		HOSE VM370	ﾎｰｽ	4	[ACC][LG]
-	04601-33334		HOSE VM375	ﾎｰｽ	4	[ACC][LG]
-	04601-33368		HOSE VM400	ﾎｰｽ	4	[ACC][LG]
-	04601-33393		HOSE VM425	ﾎｰｽ	4	[ACC][LG]
-	04601-33417		HOSE VM450	ﾎｰｽ	4	[ACC][LG]
-	04601-33442		HOSE VM475	ﾎｰｽ	4	[ACC][LG]
-	04601-33466		HOSE VM500	ﾎｰｽ	4	[ACC][LG]
-	04601-33526		HOSE VM550	ﾎｰｽ	4	[ACC][LG]
-	04601-33576		HOSE VM600	ﾎｰｽ	4	[ACC][LG]
21	63130-15033		ACCUMULATOR	ｱｷｭﾑﾚｰﾀ	2	[ACC][LG]
22	62150-12561		BRACKET	ﾌﾞﾗｹｯﾄ	2	[ACC][LG]
23	62130-12171		U-BOLT	Uﾎﾞﾙﾄ	2	[ACC][LG]
24	02010-00008		WASHER	ﾜｯｼｬ	4	[ACC][LG]
25	01400-00008		NUT	ﾅｯﾄ	4	[ACC][LG]
26	63110-12181		ELBOW	ｴﾙﾎﾞ	2	[ACC][LG]
27	63130-31040		HOSE	ﾎｰｽ	2	[ACC][LG]
28	53110-12341		ELBOW	ｴﾙﾎﾞ	2	[ACC][LG]
29	62469-27001	+	DECAL,CAUTION	ﾃﾞｶﾙ	1	[ACC][LG]

FIG.167 HYDRAULIC LINE (RELIEF VALVE)[VRV]

(A503AP80) ﾊｲﾄﾞﾛﾘｯｸﾗｲﾝ (ﾘﾘｰﾌﾊﾞﾙﾌﾞ)

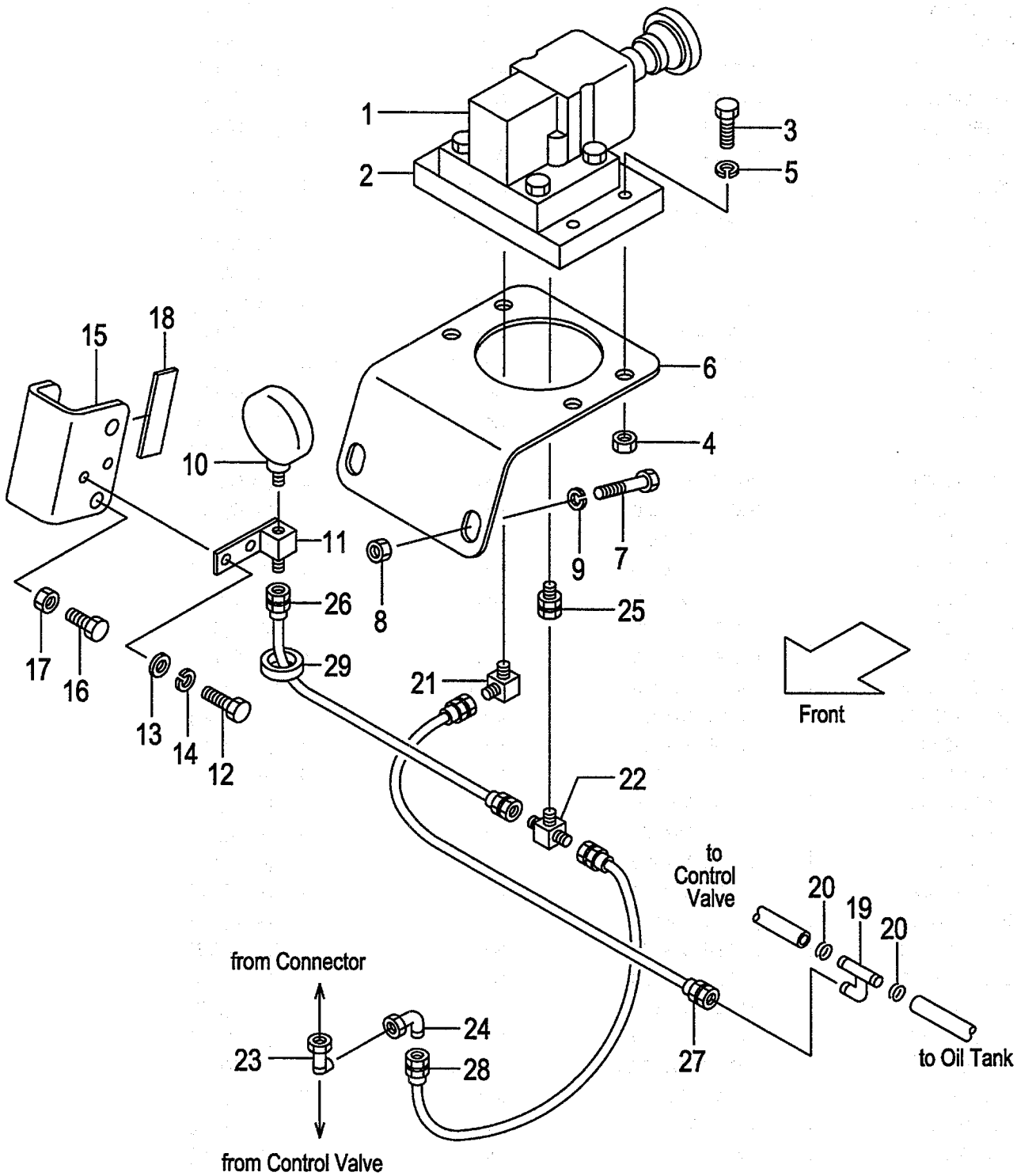

A:AP031F(VM/J)

Item No	Part No.	Mark	Description		Req'd	Remarks : Serial No.
1	63130-15771		VALVE,RELIEF	ﾊﾞﾙﾌﾞ	1	[VRV]
2	63130-15921		PLATE	ﾌﾟﾚｰﾄ	1	[VRV]
3	01181-08030		BOLT	ﾎﾞﾙﾄ	4	[VRV]
4	01400-00008		NUT	ﾅｯﾄ	4	[VRV]
5	02010-00008		WASHER	ﾜｯｼｬ	4	[VRV]
6	61170-10151		BRACKET	ﾌﾞﾗｹｯﾄ	1	[VRV]
7	01181-10025		BOLT	ﾎﾞﾙﾄ	2	[VRV]
8	01400-00010		NUT	ﾅｯﾄ	2	[VRV]
9	02010-00010		WASHER	ﾜｯｼｬ	2	[VRV]
10	63110-20221		GAUGE	ｹﾞｰｼﾞ	1	[VRV]
11	62150-14041		STUD	ｽﾀｯﾄﾞ	1	[VRV]
12	01100-08012		BOLT	ﾎﾞﾙﾄ	2	[VRV]
13	02000-00008		WASHER	ﾜｯｼｬ	2	[VRV]
14	02010-00008		WASHER	ﾜｯｼｬ	2	[VRV]
15	61170-10101		BRACKET	ﾌﾞﾗｹｯﾄ	1	[VRV]
16	01100-10016		BOLT	ﾎﾞﾙﾄ	2	[VRV]
17	01402-00010		NUT	ﾅｯﾄ	2	[VRV]
18	61170-10111		RUBBER	ﾗﾊﾞｰ	1	[VRV]
19	62150-14011		PIPE	ﾊﾟｲﾌﾟ	1	[VRV]
20	63110-20261		CLIP	ｸﾘｯﾌﾟ	2	[VRV]
21	53110-12121		ELBOW	ｴﾙﾎﾞ	1	[VRV]
22	61170-10201		THREE-WAY	ｽﾘｰｳｴｲ	1	[VRV]
23	62150-14001		THREE-WAY	ｽﾘｰｳｴｲ	1	[VRV]
24	62150-14311		ELBOW	ｴﾙﾎﾞ	1	[VRV]
25	04138-00303		UNION	ﾕﾆｵﾝ	1	[VRV]
26	63130-31055		HOSE	ﾎｰｽ	1	[VRV]
27	63130-21085		HOSE	ﾎｰｽ	1	[VRV]
28	63130-21120		HOSE	ﾎｰｽ	1	[VRV]
29	04913-11300		BAND	ﾊﾞﾝﾄﾞ	2	[VRV]
30	63130-12751	+	PLUG	ﾌﾟﾗｸﾞ	1	[VRV]

FIG.168 HYDRAULIC LINE (CONTROL VALVE-CONNECTOR)

(A503AP90) ﾊｲﾄﾞﾛﾘｯｸﾗｲﾝ (ｺﾝﾄﾛｰﾙﾊﾞﾙﾌﾞ-ｺﾈｸﾀ)

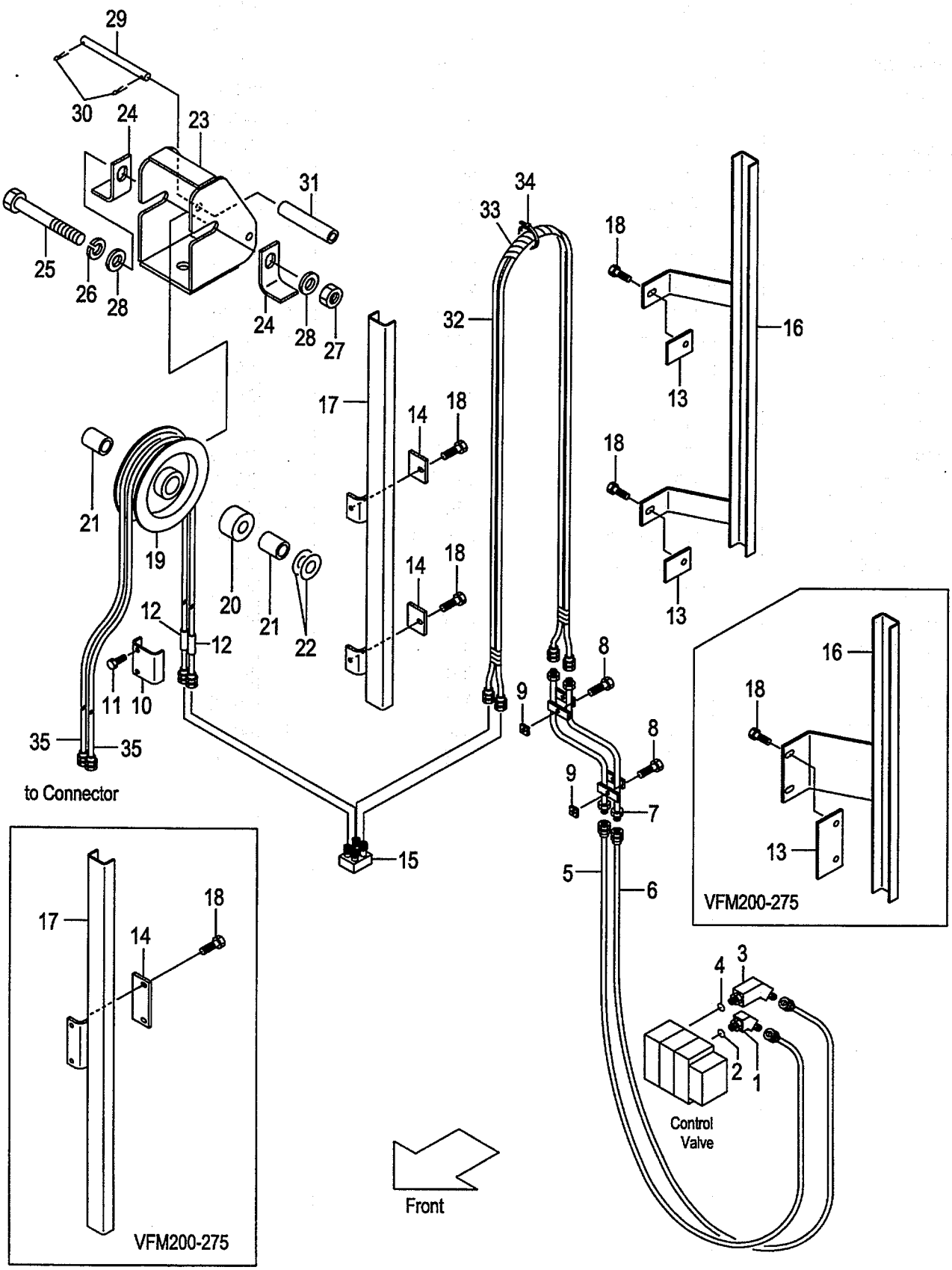

A:AP131F(VFM/J)

Item No	Part No.	Mark	Description		Req'd	Remarks : Serial No.
A1	62160-10021		ELBOW-ASSY	ｴﾙﾎﾞｱｯｾﾝ	1	INC.1,2
1	63130-12071		ELBOW	ｴﾙﾎﾞ	1	
2	03320-00140		O-RING	Oﾘﾝｸﾞ	1	
A2	62160-10001		ELBOW-ASSY	ｴﾙﾎﾞｱｯｾﾝ	1	INC.3,4
3	62160-10011		ELBOW	ｴﾙﾎﾞ	1	
4	03320-00140		O-RING	Oﾘﾝｸﾞ	1	
5	62160-12302		HOSE	ﾎｰｽ	1	
6	62160-12312		HOSE	ﾎｰｽ	1	
7	62170-12311		PIPE	ﾊﾟｲﾌﾟ	1	
8	01183-08016		BOLT	ﾎﾞﾙﾄ	2	
9	62150-12981		BLOCK,TAPPED	ﾌﾞﾛｯｸ	2	
10	62170-12601		BAND	ﾊﾞﾝﾄﾞ	1	
11	01183-08035		BOLT	ﾎﾞﾙﾄ	2	
12	61350-10021		RUBBER	ﾗﾊﾞｰ	2	
13	61150-12311		PLATE	ﾌﾟﾚｰﾄ	1	(VFM200-275)
-	61150-12321		PLATE	ﾌﾟﾚｰﾄ	2	(VFM300-600)
14	62170-12091		PLATE	ﾌﾟﾚｰﾄ	1	(VFM200-275)
-	62170-12081		PLATE	ﾌﾟﾚｰﾄ	2	(VFM300-600)
15	62170-12571		STUD	ｽﾀｯﾄﾞ	1	
16	62170-13001		GUIDE VFM200	ｶﾞｲﾄﾞ	1	
-	62170-13011		GUIDE VFM225	ｶﾞｲﾄﾞ	1	
-	62170-13021		GUIDE VFM250	ｶﾞｲﾄﾞ	1	
-	62170-13031		GUIDE VFM270	ｶﾞｲﾄﾞ	1	
-	62170-13041		GUIDE VFM275	ｶﾞｲﾄﾞ	1	
-	62170-12051		GUIDE VFM300	ｶﾞｲﾄﾞ	1	
-	62170-13051		GUIDE VFM325	ｶﾞｲﾄﾞ	1	
-	62170-13061		GUIDE VFM330	ｶﾞｲﾄﾞ	1	
-	62170-13071		GUIDE VFM350	ｶﾞｲﾄﾞ	1	
-	62170-13081		GUIDE VFM366	ｶﾞｲﾄﾞ	1	
-	62170-13091		GUIDE VFM370	ｶﾞｲﾄﾞ	1	
-	62170-13101		GUIDE VFM375	ｶﾞｲﾄﾞ	1	
-	62170-13111		GUIDE VFM400	ｶﾞｲﾄﾞ	1	
-	62170-13121		GUIDE VFM425	ｶﾞｲﾄﾞ	1	
-	62170-13131		GUIDE VFM450	ｶﾞｲﾄﾞ	1	
-	62170-13141		GUIDE VFM475	ｶﾞｲﾄﾞ	1	
-	62170-13151		GUIDE VFM500	ｶﾞｲﾄﾞ	1	
-	62170-13161		GUIDE VFM550	ｶﾞｲﾄﾞ	1	
-	62170-13171		GUIDE VFM600	ｶﾞｲﾄﾞ	1	
17	62170-13201		GUIDE VFM200	ｶﾞｲﾄﾞ	1	
-	62170-13211		GUIDE VFM225	ｶﾞｲﾄﾞ	1	
-	62170-13221		GUIDE VFM250	ｶﾞｲﾄﾞ	1	
-	62170-13231		GUIDE VFM270	ｶﾞｲﾄﾞ	1	
-	62170-13231		GUIDE VFM275	ｶﾞｲﾄﾞ	1	
-	62170-12001		GUIDE VFM300	ｶﾞｲﾄﾞ	1	
-	62170-13241		GUIDE VFM325	ｶﾞｲﾄﾞ	1	
-	62170-13241		GUIDE VFM330	ｶﾞｲﾄﾞ	1	
-	62170-13251		GUIDE VFM350	ｶﾞｲﾄﾞ	1	
-	62170-13261		GUIDE VFM366	ｶﾞｲﾄﾞ	1	
-	62170-13261		GUIDE VFM370	ｶﾞｲﾄﾞ	1	
-	62170-13261		GUIDE VFM375	ｶﾞｲﾄﾞ	1	

FIG.168 HYDRAULIC LINE (CONTROL VALVE-CONNECTOR)

(A503AP90) ﾊｲﾄﾞﾛﾘｯｸﾗｲﾝ (ｺﾝﾄﾛｰﾙﾊﾞﾙﾌﾞ-ｺﾈｸﾀ)

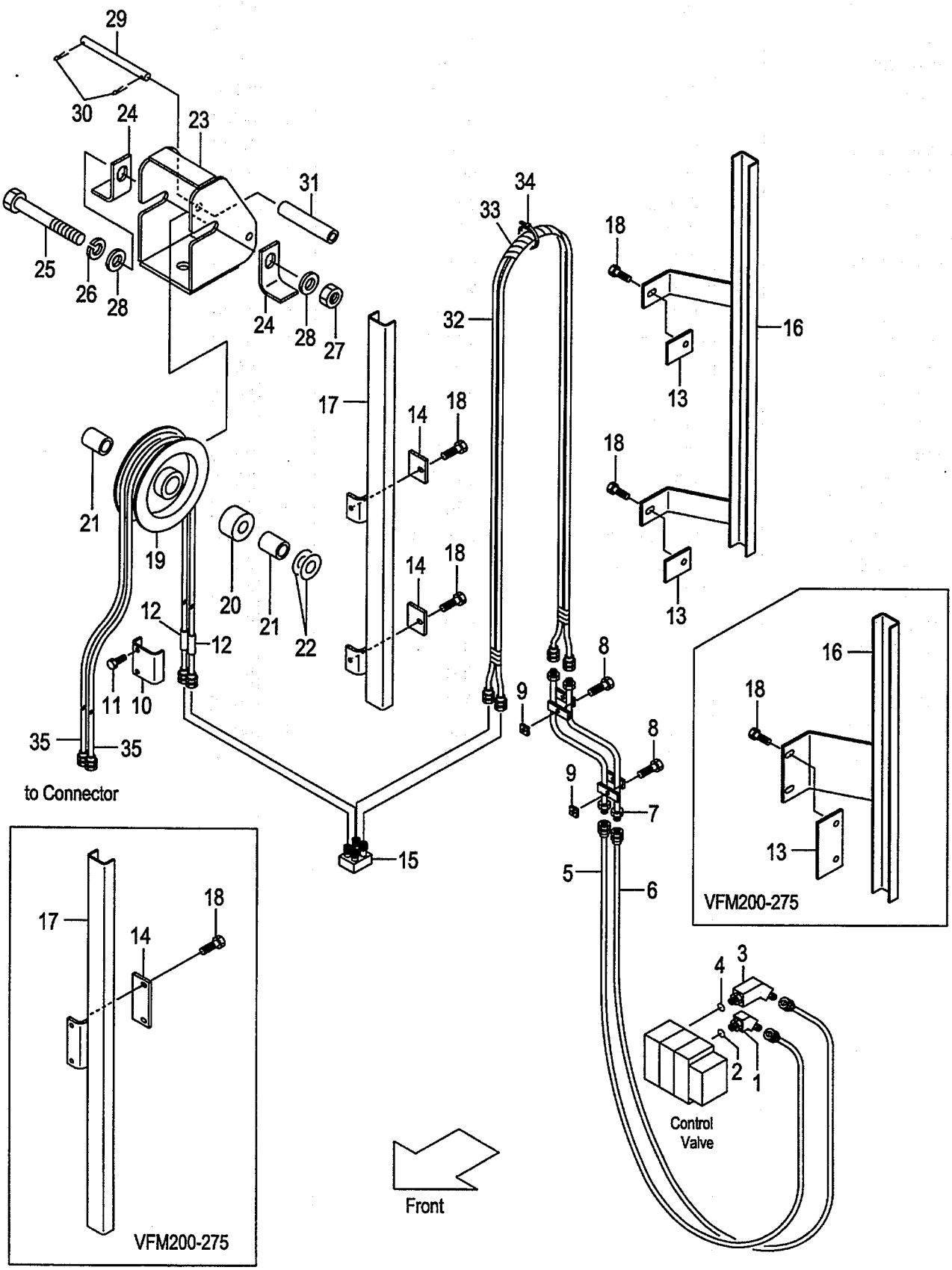

A:AP131F(VFM/J)

Item No	Part No.	Mark	Description		Req'd	Remarks : Serial No.
-	62170-13271		GUIDE VFM400	ｶﾞｲﾄﾞ	1	
-	62170-13281		GUIDE VFM425	ｶﾞｲﾄﾞ	1	
-	62170-13291		GUIDE VFM450	ｶﾞｲﾄﾞ	1	
-	62170-13301		GUIDE VFM475	ｶﾞｲﾄﾞ	1	
-	62170-13311		GUIDE VFM500	ｶﾞｲﾄﾞ	1	
-	62170-13321		GUIDE VFM550	ｶﾞｲﾄﾞ	1	
-	62170-13331		GUIDE VFM600	ｶﾞｲﾄﾞ	1	
18	01183-08016		BOLT	ﾎﾞﾙﾄ	4	
19	62170-12731		PULLEY	ﾌﾟｰﾘ	1	
20	62170-12671		SPACER	ｽﾍﾟｰｻ	1	
21	62170-12651		COLLAR	ｶﾗｰ	2	
22	23917-42191		SHIM	ｼﾑ	2	
23	62170-12501		BRACKET	ﾌﾞﾗｹｯﾄ	1	
24	62170-12551		STOPPER	ｽﾄｯﾊﾟ	2	
25	01100-16140		BOLT	ﾎﾞﾙﾄ	1	
26	02010-00016		WASHER	ﾜｯｼｬ	1	
27	01400-00016		NUT	ﾅｯﾄ	1	
28	02000-00016		WASHER	ﾜｯｼｬ	2	
29	62170-12701		PIN	ﾋﾟﾝ	1	
30	02200-32020		PIN	ﾋﾟﾝ	2	
31	62170-12711		COLLAR	ｶﾗｰ	1	
32	63300-31090		HOSE VFM200	ﾎｰｽ	1	
-	63300-31100		HOSE VFM225	ﾎｰｽ	1	
-	63300-31115		HOSE VFM250	ﾎｰｽ	1	
-	63300-31125		HOSE VFM270	ﾎｰｽ	1	
-	63300-31125		HOSE VFM275	ﾎｰｽ	1	
-	63300-31140		HOSE VFM300	ﾎｰｽ	1	
-	63300-31150		HOSE VFM325	ﾎｰｽ	1	
-	63300-31155		HOSE VFM330	ﾎｰｽ	1	
-	63300-31165		HOSE VFM350	ﾎｰｽ	1	
-	63300-31170		HOSE VFM366	ﾎｰｽ	1	
-	63300-31175		HOSE VFM370	ﾎｰｽ	1	
-	63300-31175		HOSE VFM375	ﾎｰｽ	1	
-	63300-31185		HOSE VFM400	ﾎｰｽ	1	
-	63300-31195		HOSE VFM425	ﾎｰｽ	1	
-	63300-31210		HOSE VFM450	ﾎｰｽ	1	
-	63300-31220		HOSE VFM475	ﾎｰｽ	1	
-	63300-31235		HOSE VFM500	ﾎｰｽ	1	
-	63300-31255		HOSE VFM550	ﾎｰｽ	1	
-	63300-31280		HOSE VFM600	ﾎｰｽ	1	
33	27730-62431		LAP,SPIRAL VFM200	ﾗｯﾌﾟ	1	
-	27730-62431		LAP,SPIRAL VFM225	ﾗｯﾌﾟ	1	
-	27730-62451		LAP,SPIRAL VFM250	ﾗｯﾌﾟ	1	
-	27730-62461		LAP,SPIRAL VFM270	ﾗｯﾌﾟ	1	
-	27730-62461		LAP,SPIRAL VFM275	ﾗｯﾌﾟ	1	
-	27730-62471		LAP,SPIRAL VFM300	ﾗｯﾌﾟ	1	
-	27730-62481		LAP,SPIRAL VFM325	ﾗｯﾌﾟ	1	
-	27730-62481		LAP,SPIRAL VFM330	ﾗｯﾌﾟ	1	
-	27730-62491		LAP,SPIRAL VFM350	ﾗｯﾌﾟ	1	
-	27730-62491		LAP,SPIRAL VFM366	ﾗｯﾌﾟ	1	

FIG.168 HYDRAULIC LINE (CONTROL VALVE-CONNECTOR)

(A503AP90) ﾊｲﾄﾞﾛﾘｯｸﾗｲﾝ (ｺﾝﾄﾛｰﾙﾊﾞﾙﾌﾞ-ｺﾈｸﾀ)

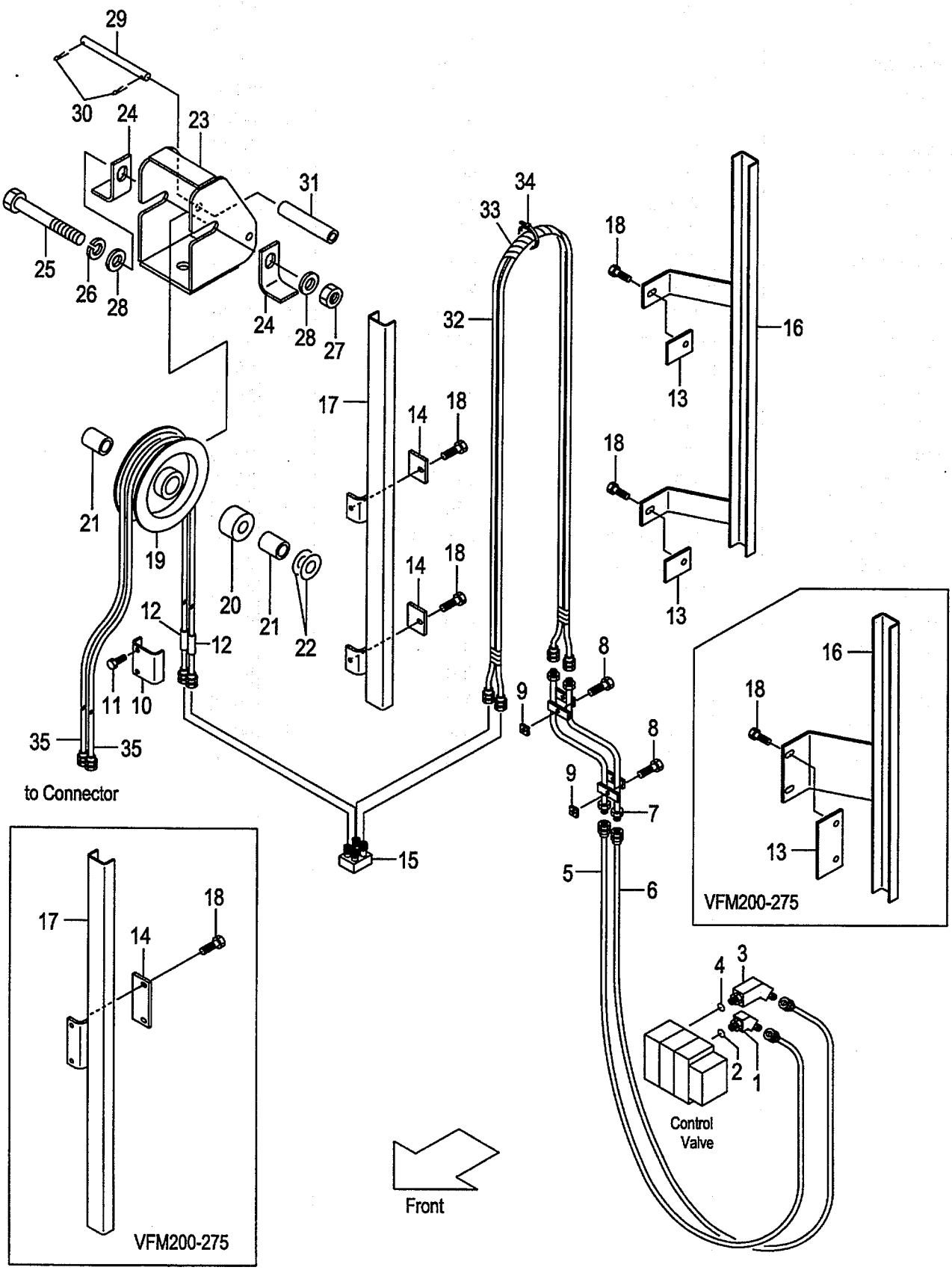

A:AP131F(VFM/J)

Item No	Part No.	Mark	Description		Req'd	Remarks : Serial No.
-	27730-62491		LAP,SPIRAL VFM370	ﾗｯﾌﾟ	1	
-	27730-62491		LAP,SPIRAL VFM375	ﾗｯﾌﾟ	1	
-	62140-12811		LAP,SPIRAL VFM400	ﾗｯﾌﾟ	1	
-	62140-12811		LAP,SPIRAL VFM425	ﾗｯﾌﾟ	1	
-	62140-12821		LAP,SPIRAL VFM450	ﾗｯﾌﾟ	1	
-	62140-12821		LAP,SPIRAL VFM475	ﾗｯﾌﾟ	1	
-	62140-12831		LAP,SPIRAL VFM500	ﾗｯﾌﾟ	1	
-	62140-12841		LAP,SPIRAL VFM550	ﾗｯﾌﾟ	1	
-	62140-12851		LAP,SPIRAL VFM600	ﾗｯﾌﾟ	1	
34	27132-40181		BAND	ﾊﾞﾝﾄﾞ	5	
35	04601-33175		HOSE VFM200	ﾎｰｽ	2	
-	04601-33190		HOSE VFM225	ﾎｰｽ	2	
-	04601-33200		HOSE VFM250	ﾎｰｽ	2	
-	04601-33210		HOSE VFM270	ﾎｰｽ	2	
-	04601-33215		HOSE VFM275	ﾎｰｽ	2	
-	04601-33225		HOSE VFM300	ﾎｰｽ	2	
-	04601-33240		HOSE VFM325	ﾎｰｽ	2	
-	04601-33240		HOSE VFM330	ﾎｰｽ	2	
-	04601-33250		HOSE VFM350	ﾎｰｽ	2	
-	04601-33260		HOSE VFM366	ﾎｰｽ	2	
-	04601-33260		HOSE VFM370	ﾎｰｽ	2	
-	04601-33265		HOSE VFM375	ﾎｰｽ	2	
-	04601-33270		HOSE VFM400	ﾎｰｽ	2	
-	04601-33285		HOSE VFM425	ﾎｰｽ	2	
-	04601-33295		HOSE VFM450	ﾎｰｽ	2	
-	04601-33310		HOSE VFM475	ﾎｰｽ	2	
-	04601-33320		HOSE VFM500	ﾎｰｽ	2	
-	04601-33340		HOSE VFM550	ﾎｰｽ	2	
-	04601-33365		HOSE VFM600	ﾎｰｽ	2	
36	62170-12611	+	PLATE	ﾌﾟﾚｰﾄ	1	
37	01183-08016	+	BOLT & WASHER	ﾎﾞﾙﾄ&ﾜｯｼｬ	2	

HYDRAULIC LINE
FIG.169 (CONT. VALVE-CONNECTOR)[AR4,ARD,4AP]
(A503APA0) ﾊｲﾄﾞﾛﾘｯｸﾗｲﾝ (ｺﾝﾄﾛｰﾙﾊﾞﾙﾌﾞ-ｺﾈｸﾀ)

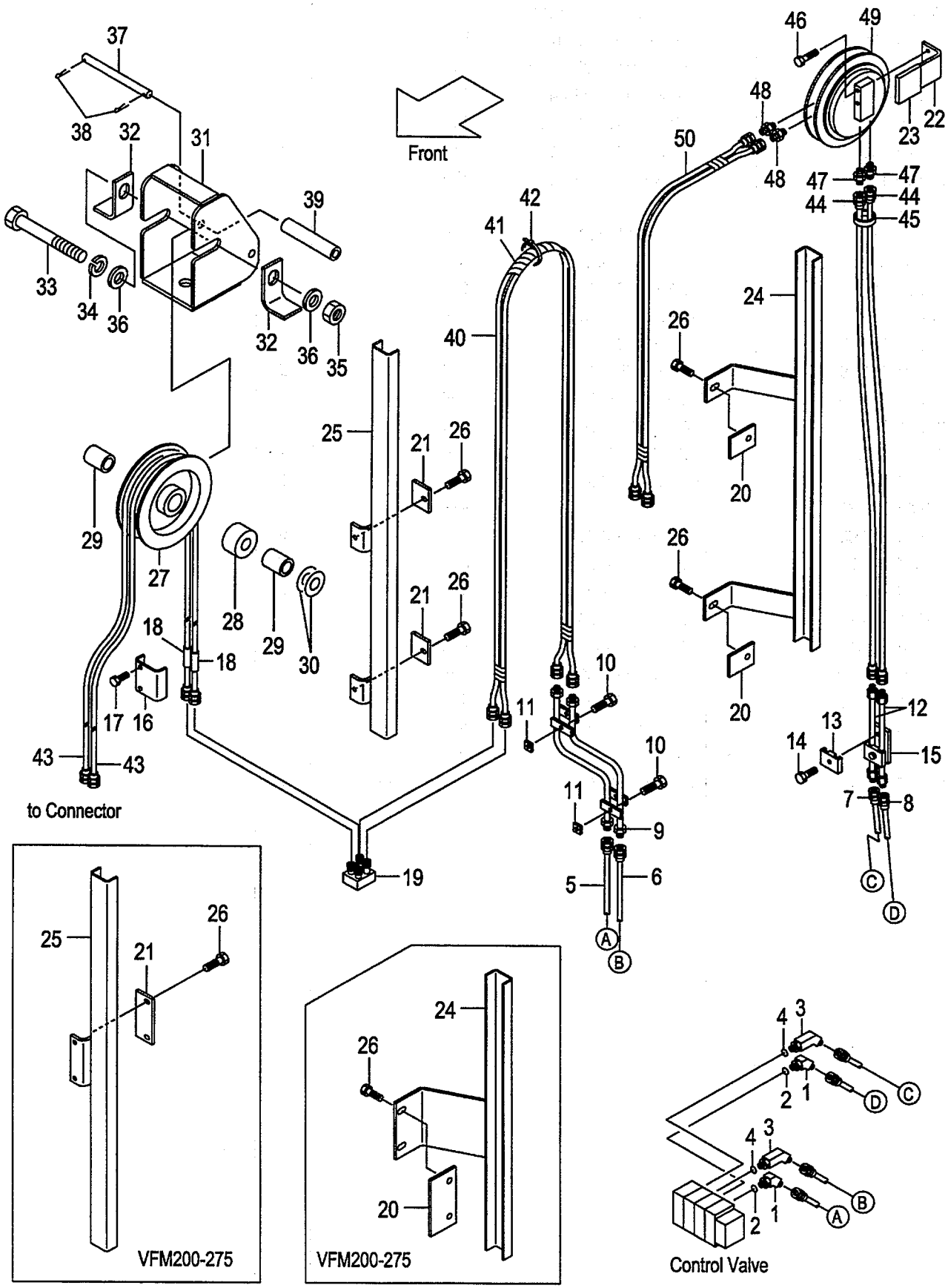

A:AP131F(VFM/J)

Item No	Part No.	Mark	Description		Req'd	Remarks : Serial No.
A1	62160-10021		ELBOW-ASSY	ｴﾙﾎﾞｱｯｾﾝ	2	[AR4][ARD][4AP] INC.1,2
1	63130-12071		ELBOW	ｴﾙﾎﾞ	2	[AR4][ARD][4AP]
2	03320-00140		O-RING	Oﾘﾝｸﾞ	2	[AR4][ARD][4AP]
A2	62160-10001		ELBOW-ASSY	ｴﾙﾎﾞｱｯｾﾝ	2	[AR4][ARD][4AP] INC.3,4
3	62160-10011		ELBOW	ｴﾙﾎﾞ	2	[AR4][ARD][4AP]
4	03320-00140		O-RING	Oﾘﾝｸﾞ	2	[AR4][ARD][4AP]
5	62160-12302		HOSE	ﾎｰｽ	1	[AR4][ARD][4AP]
6	62160-12312		HOSE	ﾎｰｽ	1	[AR4][ARD][4AP]
7	62150-12612		HOSE	ﾎｰｽ	1	[AR4][ARD][4AP]
8	62150-12512		HOSE	ﾎｰｽ	1	[AR4][ARD][4AP]
9	62170-12311		PIPE	ﾊﾟｲﾌﾟ	1	[AR4][ARD][4AP]
10	01183-08016		BOLT	ﾎﾞﾙﾄ	2	[AR4][ARD][4AP]
11	62150-12981		BLOCK,TAPPED	ﾌﾞﾛｯｸ	2	[AR4][ARD][4AP]
12	62160-12401		PIPE	ﾊﾟｲﾌﾟ	2	[AR4][ARD][4AP]
13	63810-12081		BAND	ﾊﾞﾝﾄﾞ	2	[AR4][ARD][4AP]
14	01184-10035		BOLT	ﾎﾞﾙﾄ	2	[AR4][ARD][4AP]
15	63680-12401		BRACKET	ﾌﾞﾗｹｯﾄ	1	[AR4][ARD][4AP]
16	62170-12601		BAND	ﾊﾞﾝﾄﾞ	1	[AR4][ARD][4AP]
17	01183-08035		BOLT	ﾎﾞﾙﾄ	2	[AR4][ARD][4AP]
18	61350-10021		RUBBER	ﾗﾊﾞｰ	2	[AR4][ARD][4AP]
19	62170-12571		STUD	ｽﾀｯﾄﾞ	1	[AR4][ARD][4AP]
20	61150-12311		PLATE	ﾌﾟﾚｰﾄ	1	[(AR4,ARD,4AP)/VFM200-275]
-	61150-12321		PLATE	ﾌﾟﾚｰﾄ	2	[(AR4,ARD,4AP)/VFM300-600]
21	62170-12091		PLATE	ﾌﾟﾚｰﾄ	1	[(AR4,ARD,4AP)/VFM200-275]
-	62170-12081		PLATE	ﾌﾟﾚｰﾄ	2	[(AR4,ARD,4AP)/VFM300-600]
22	62170-12901		BRACKET	ﾌﾞﾗｹｯﾄ	1	[AR4][ARD][4AP]
23	61163-32012		PLATE	ﾌﾟﾚｰﾄ	1	[AR4][ARD][4AP]
24	62170-13001		GUIDE VFM200	ｶﾞｲﾄﾞ	1	[AR4][ARD][4AP]
-	62170-13011		GUIDE VFM225	ｶﾞｲﾄﾞ	1	[AR4][ARD][4AP]
-	62170-13021		GUIDE VFM250	ｶﾞｲﾄﾞ	1	[AR4][ARD][4AP]
-	62170-13031		GUIDE VFM270	ｶﾞｲﾄﾞ	1	[AR4][ARD][4AP]
-	62170-13041		GUIDE VFM275	ｶﾞｲﾄﾞ	1	[AR4][ARD][4AP]
-	62170-12051		GUIDE VFM300	ｶﾞｲﾄﾞ	1	[AR4][ARD][4AP]
-	62170-13051		GUIDE VFM325	ｶﾞｲﾄﾞ	1	[AR4][ARD][4AP]
-	62170-13061		GUIDE VFM330	ｶﾞｲﾄﾞ	1	[AR4][ARD][4AP]
-	62170-13071		GUIDE VFM350	ｶﾞｲﾄﾞ	1	[AR4][ARD][4AP]
-	62170-13081		GUIDE VFM366	ｶﾞｲﾄﾞ	1	[AR4][ARD][4AP]
-	62170-13091		GUIDE VFM370	ｶﾞｲﾄﾞ	1	[AR4][ARD][4AP]
-	62170-13101		GUIDE VFM375	ｶﾞｲﾄﾞ	1	[AR4][ARD][4AP]
-	62170-13111		GUIDE VFM400	ｶﾞｲﾄﾞ	1	[AR4][ARD][4AP]
-	62170-13121		GUIDE VFM425	ｶﾞｲﾄﾞ	1	[AR4][ARD][4AP]
-	62170-13131		GUIDE VFM450	ｶﾞｲﾄﾞ	1	[AR4][ARD][4AP]
-	62170-13141		GUIDE VFM475	ｶﾞｲﾄﾞ	1	[AR4][ARD][4AP]
-	62170-13151		GUIDE VFM500	ｶﾞｲﾄﾞ	1	[AR4][ARD][4AP]
-	62170-13161		GUIDE VFM550	ｶﾞｲﾄﾞ	1	[AR4][ARD][4AP]
-	62170-13171		GUIDE VFM600	ｶﾞｲﾄﾞ	1	[AR4][ARD][4AP]
25	62170-13201		GUIDE VFM200	ｶﾞｲﾄﾞ	1	[AR4][ARD][4AP]
-	62170-13211		GUIDE VFM225	ｶﾞｲﾄﾞ	1	[AR4][ARD][4AP]
-	62170-13221		GUIDE VFM250	ｶﾞｲﾄﾞ	1	[AR4][ARD][4AP]
-	62170-13231		GUIDE VFM270	ｶﾞｲﾄﾞ	1	[AR4][ARD][4AP]

HYDRAULIC LINE
FIG.169 (CONT. VALVE-CONNECTOR)[AR4,ARD,4AP]
(A503APA0) ﾊｲﾄﾞﾛﾘｯｸﾗｲﾝ (ｺﾝﾄﾛｰﾙﾊﾞﾙﾌﾞ-ｺﾈｸﾀ)

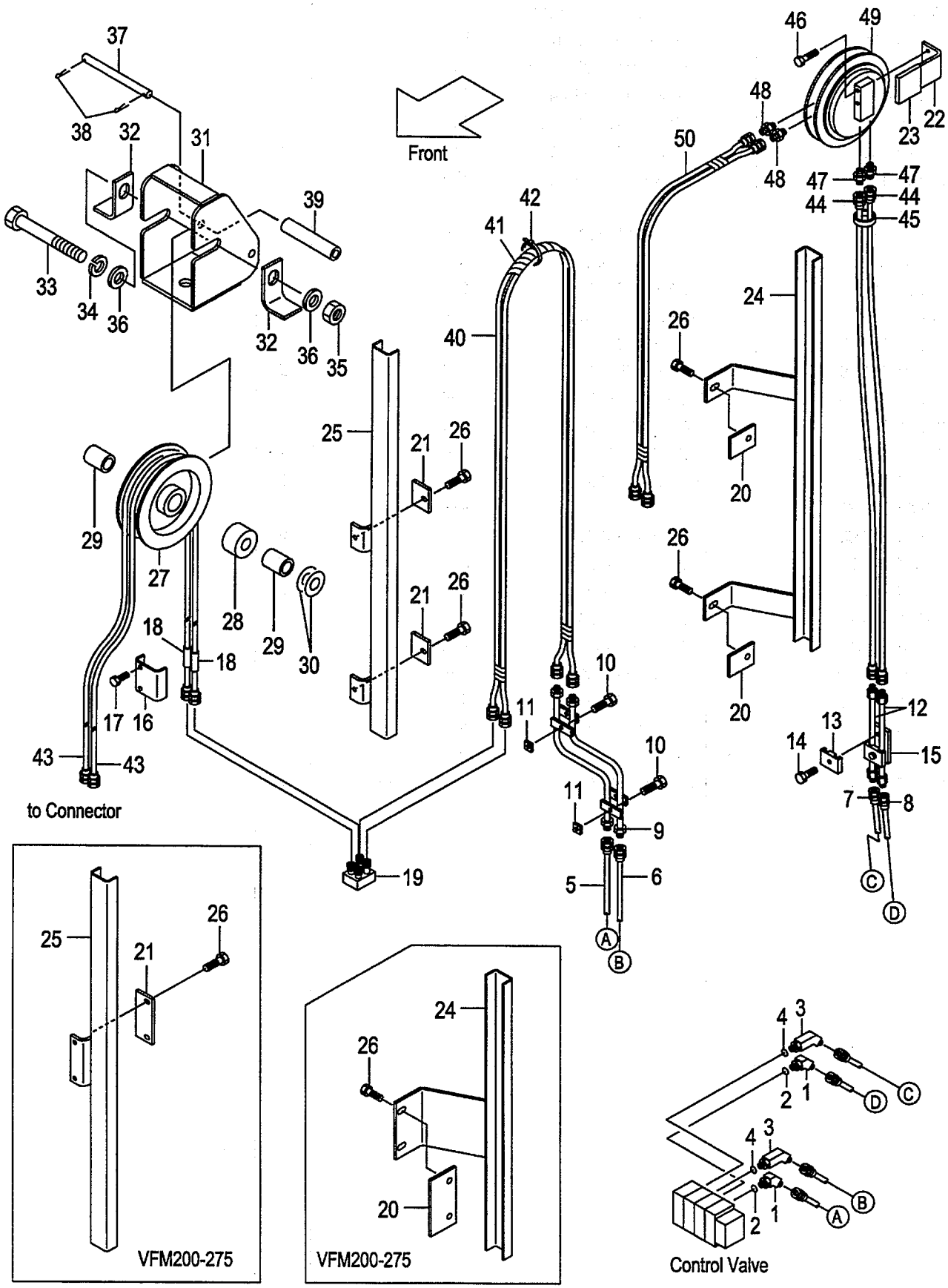

A:AP131F(VFM/J)

Item No	Part No.	Mark	Description		Req'd	Remarks : Serial No.
-	62170-13231		GUIDE VFM275	ｶﾞｲﾄﾞ	1	[AR4][ARD][4AP]
-	62170-12001		GUIDE VFM300	ｶﾞｲﾄﾞ	1	[AR4][ARD][4AP]
-	62170-13241		GUIDE VFM325	ｶﾞｲﾄﾞ	1	[AR4][ARD][4AP]
-	62170-13241		GUIDE VFM330	ｶﾞｲﾄﾞ	1	[AR4][ARD][4AP]
-	62170-13251		GUIDE VFM350	ｶﾞｲﾄﾞ	1	[AR4][ARD][4AP]
-	62170-13261		GUIDE VFM366	ｶﾞｲﾄﾞ	1	[AR4][ARD][4AP]
-	62170-13261		GUIDE VFM370	ｶﾞｲﾄﾞ	1	[AR4][ARD][4AP]
-	62170-13261		GUIDE VFM375	ｶﾞｲﾄﾞ	1	[AR4][ARD][4AP]
-	62170-13271		GUIDE VFM400	ｶﾞｲﾄﾞ	1	[AR4][ARD][4AP]
-	62170-13281		GUIDE VFM425	ｶﾞｲﾄﾞ	1	[AR4][ARD][4AP]
-	62170-13291		GUIDE VFM450	ｶﾞｲﾄﾞ	1	[AR4][ARD][4AP]
-	62170-13301		GUIDE VFM475	ｶﾞｲﾄﾞ	1	[AR4][ARD][4AP]
-	62170-13311		GUIDE VFM500	ｶﾞｲﾄﾞ	1	[AR4][ARD][4AP]
-	62170-13321		GUIDE VFM550	ｶﾞｲﾄﾞ	1	[AR4][ARD][4AP]
-	62170-13331		GUIDE VFM600	ｶﾞｲﾄﾞ	1	[AR4][ARD][4AP]
26	01183-08016		BOLT	ﾎﾞﾙﾄ	4	[AR4][ARD][4AP]
27	62170-12731		PULLEY	ﾌﾟｰﾘ	1	[AR4][ARD][4AP]
28	62170-12671		SPACER	ｽﾍﾟｰｻ	1	[AR4][ARD][4AP]
29	62170-12651		COLLAR	ｶﾗｰ	2	[AR4][ARD][4AP]
30	23917-42191		SHIM	ｼﾑ	2	[AR4][ARD][4AP]
31	62170-12501		BRACKET	ﾌﾞﾗｹｯﾄ	1	[AR4][ARD][4AP]
32	62170-12551		STOPPER	ｽﾄｯﾊﾟ	2	[AR4][ARD][4AP]
33	01100-16140		BOLT	ﾎﾞﾙﾄ	1	[AR4][ARD][4AP]
34	02010-00016		WASHER	ﾜｯｼｬ	1	[AR4][ARD][4AP]
35	01400-00016		NUT	ﾅｯﾄ	1	[AR4][ARD][4AP]
36	02000-00016		WASHER	ﾜｯｼｬ	2	[AR4][ARD][4AP]
37	62170-12701		PIN	ﾋﾟﾝ	1	[AR4][ARD][4AP]
38	02200-32020		PIN	ﾋﾟﾝ	2	[AR4][ARD][4AP]
39	62170-12711		COLLAR	ｶﾗｰ	1	[AR4][ARD][4AP]
40	63300-31090		HOSE VFM200	ﾎｰｽ	1	[AR4][ARD][4AP]
-	63300-31100		HOSE VFM225	ﾎｰｽ	1	[AR4][ARD][4AP]
-	63300-31115		HOSE VFM250	ﾎｰｽ	1	[AR4][ARD][4AP]
-	63300-31125		HOSE VFM270	ﾎｰｽ	1	[AR4][ARD][4AP]
-	63300-31125		HOSE VFM275	ﾎｰｽ	1	[AR4][ARD][4AP]
-	63300-31140		HOSE VFM300	ﾎｰｽ	1	[AR4][ARD][4AP]
-	63300-31150		HOSE VFM325	ﾎｰｽ	1	[AR4][ARD][4AP]
-	63300-31155		HOSE VFM330	ﾎｰｽ	1	[AR4][ARD][4AP]
-	63300-31165		HOSE VFM350	ﾎｰｽ	1	[AR4][ARD][4AP]
-	63300-31170		HOSE VFM366	ﾎｰｽ	1	[AR4][ARD][4AP]
-	63300-31175		HOSE VFM370	ﾎｰｽ	1	[AR4][ARD][4AP]
-	63300-31175		HOSE VFM375	ﾎｰｽ	1	[AR4][ARD][4AP]
-	63300-31185		HOSE VFM400	ﾎｰｽ	1	[AR4][ARD][4AP]
-	63300-31195		HOSE VFM425	ﾎｰｽ	1	[AR4][ARD][4AP]
-	63300-31210		HOSE VFM450	ﾎｰｽ	1	[AR4][ARD][4AP]
-	63300-31220		HOSE VFM475	ﾎｰｽ	1	[AR4][ARD][4AP]
-	63300-31235		HOSE VFM500	ﾎｰｽ	1	[AR4][ARD][4AP]
-	63300-21255		HOSE VFM550	ﾎｰｽ	1	[AR4][ARD][4AP]
-	63300-31280		HOSE VFM600	ﾎｰｽ	1	[AR4][ARD][4AP]
41	27730-62431		LAP,SPIRAL VFM200	ﾗｯﾌﾟ	1	[AR4][ARD][4AP]
-	27730-62431		LAP,SPIRAL VFM225	ﾗｯﾌﾟ	1	[AR4][ARD][4AP]

HYDRAULIC LINE
FIG.169 (CONT. VALVE-CONNECTOR)[AR4,ARD,4AP]
(A503APA0) ﾊｲﾄﾞﾛﾘｯｸﾗｲﾝ (ｺﾝﾄﾛｰﾙﾊﾞﾙﾌﾞ-ｺﾈｸﾀ)

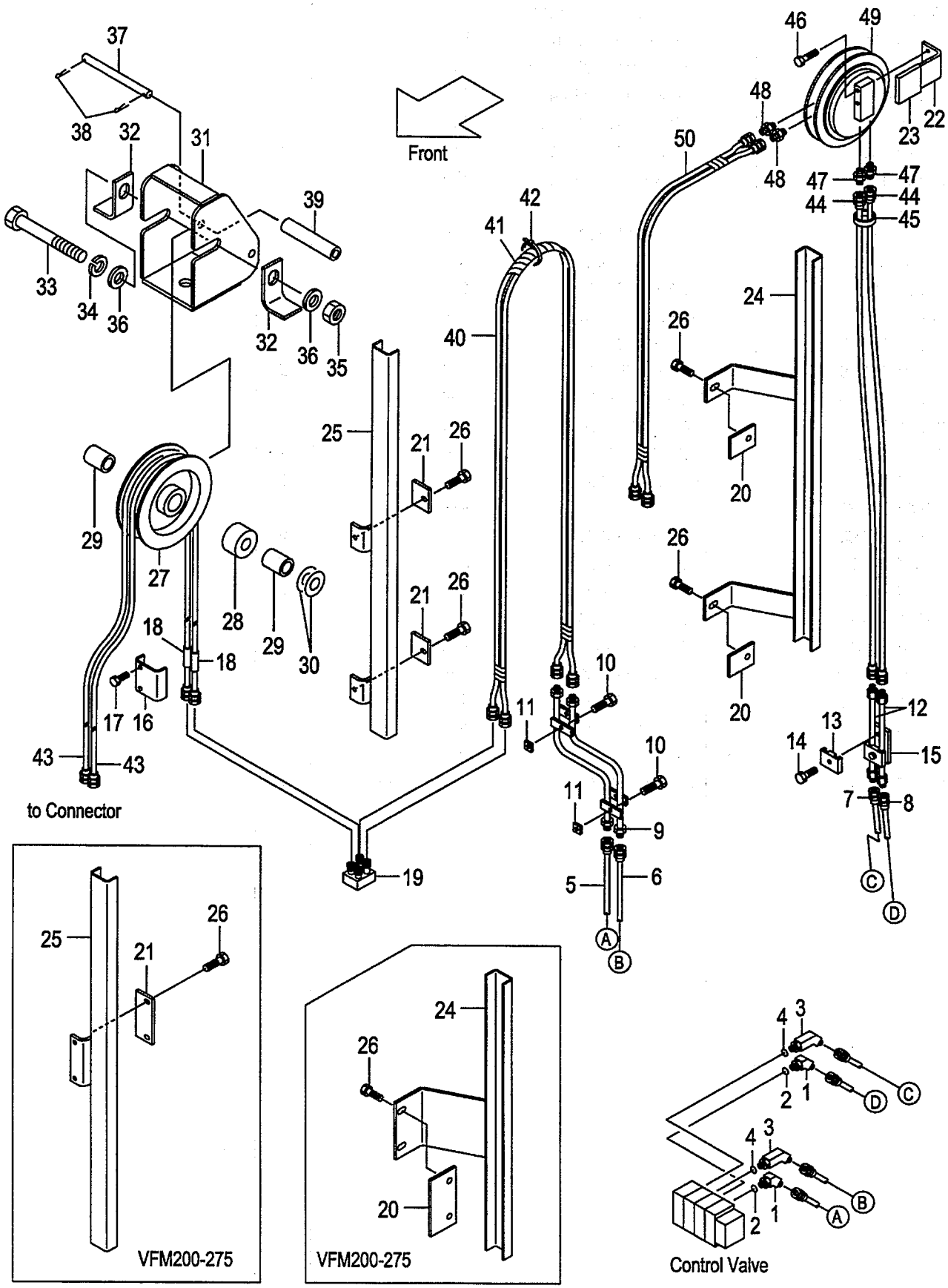

A:AP131F(VFM/J)

Item No	Part No.	Mark	Description		Req'd	Remarks : Serial No.
-	27730-62451		LAP,SPIRAL VFM250	ﾗｯﾌﾟ	1	[AR4][ARD][4AP]
-	27730-62461		LAP,SPIRAL VFM270	ﾗｯﾌﾟ	1	[AR4][ARD][4AP]
-	27730-62461		LAP,SPIRAL VFM275	ﾗｯﾌﾟ	1	[AR4][ARD][4AP]
-	27730-62471		LAP,SPIRAL VFM300	ﾗｯﾌﾟ	1	[AR4][ARD][4AP]
-	27730-62481		LAP,SPIRAL VFM325	ﾗｯﾌﾟ	1	[AR4][ARD][4AP]
-	27730-62481		LAP,SPIRAL VFM330	ﾗｯﾌﾟ	1	[AR4][ARD][4AP]
-	27730-62491		LAP,SPIRAL VFM350	ﾗｯﾌﾟ	1	[AR4][ARD][4AP]
-	27730-62491		LAP,SPIRAL VFM366	ﾗｯﾌﾟ	1	[AR4][ARD][4AP]
-	27730-62491		LAP,SPIRAL VFM370	ﾗｯﾌﾟ	1	[AR4][ARD][4AP]
-	27730-62491		LAP,SPIRAL VFM375	ﾗｯﾌﾟ	1	[AR4][ARD][4AP]
-	62140-12811		LAP,SPIRAL VFM400	ﾗｯﾌﾟ	1	[AR4][ARD][4AP]
-	62140-12811		LAP,SPIRAL VFM425	ﾗｯﾌﾟ	1	[AR4][ARD][4AP]
-	62140-12821		LAP,SPIRAL VFM450	ﾗｯﾌﾟ	1	[AR4][ARD][4AP]
-	62140-12821		LAP,SPIRAL VFM475	ﾗｯﾌﾟ	1	[AR4][ARD][4AP]
-	62140-12831		LAP,SPIRAL VFM500	ﾗｯﾌﾟ	1	[AR4][ARD][4AP]
-	62140-12841		LAP,SPIRAL VFM550	ﾗｯﾌﾟ	1	[AR4][ARD][4AP]
-	62140-12851		LAP,SPIRAL VFM600	ﾗｯﾌﾟ	1	[AR4][ARD][4AP]
42	27132-40181		BAND	ﾊﾞﾝﾄﾞ	5	[AR4][ARD][4AP]
43	04601-33175		HOSE VFM200	ﾎｰｽ	2	[AR4][ARD][4AP]
-	04601-33190		HOSE VFM225	ﾎｰｽ	2	[AR4][ARD][4AP]
-	04601-33200		HOSE VFM250	ﾎｰｽ	2	[AR4][ARD][4AP]
-	04601-33210		HOSE VFM270	ﾎｰｽ	2	[AR4][ARD][4AP]
-	04601-33215		HOSE VFM275	ﾎｰｽ	2	[AR4][ARD][4AP]
-	04601-33225		HOSE VFM300	ﾎｰｽ	2	[AR4][ARD][4AP]
-	04601-33240		HOSE VFM325	ﾎｰｽ	2	[AR4][ARD][4AP]
-	04601-33240		HOSE VFM330	ﾎｰｽ	2	[AR4][ARD][4AP]
-	04601-33250		HOSE VFM350	ﾎｰｽ	2	[AR4][ARD][4AP]
-	04601-33260		HOSE VFM366	ﾎｰｽ	2	[AR4][ARD][4AP]
-	04601-33260		HOSE VFM370	ﾎｰｽ	2	[AR4][ARD][4AP]
-	04601-33265		HOSE VFM375	ﾎｰｽ	2	[AR4][ARD][4AP]
-	04601-33270		HOSE VFM400	ﾎｰｽ	2	[AR4][ARD][4AP]
-	04601-33285		HOSE VFM425	ﾎｰｽ	2	[AR4][ARD][4AP]
-	04601-33295		HOSE VFM450	ﾎｰｽ	2	[AR4][ARD][4AP]
-	04601-33310		HOSE VFM475	ﾎｰｽ	2	[AR4][ARD][4AP]
-	04601-33320		HOSE VFM500	ﾎｰｽ	2	[AR4][ARD][4AP]
-	04601-33340		HOSE VFM550	ﾎｰｽ	2	[AR4][ARD][4AP]
-	04601-33365		HOSE VFM600	ﾎｰｽ	2	[AR4][ARD][4AP]
44	63130-21070		HOSE VFM200	ﾎｰｽ	2	[AR4][ARD][4AP]
-	63130-21080		HOSE VFM225	ﾎｰｽ	2	[AR4][ARD][4AP]
-	63130-21095		HOSE VFM250	ﾎｰｽ	2	[AR4][ARD][4AP]
-	63130-21105		HOSE VFM270	ﾎｰｽ	2	[AR4][ARD][4AP]
-	63130-21105		HOSE VFM275	ﾎｰｽ	2	[AR4][ARD][4AP]
-	63130-21120		HOSE VFM300	ﾎｰｽ	2	[AR4][ARD][4AP]
-	63130-21130		HOSE VFM325	ﾎｰｽ	2	[AR4][ARD][4AP]
-	63130-21135		HOSE VFM330	ﾎｰｽ	2	[AR4][ARD][4AP]
-	63130-21145		HOSE VFM350	ﾎｰｽ	2	[AR4][ARD][4AP]
-	63130-21150		HOSE VFM366	ﾎｰｽ	2	[AR4][ARD][4AP]
-	63130-21150		HOSE VFM370	ﾎｰｽ	2	[AR4][ARD][4AP]
-	63130-21155		HOSE VFM375	ﾎｰｽ	2	[AR4][ARD][4AP]
-	63130-21165		HOSE VFM400	ﾎｰｽ	2	[AR4][ARD][4AP]

HYDRAULIC LINE
FIG.169 (CONT. VALVE-CONNECTOR)[AR4,ARD,4AP]
(A503APA0) ﾊｲﾄﾞﾛﾘｯｸﾗｲﾝ (ｺﾝﾄﾛｰﾙﾊﾞﾙﾌﾞ-ｺﾈｸﾀ)

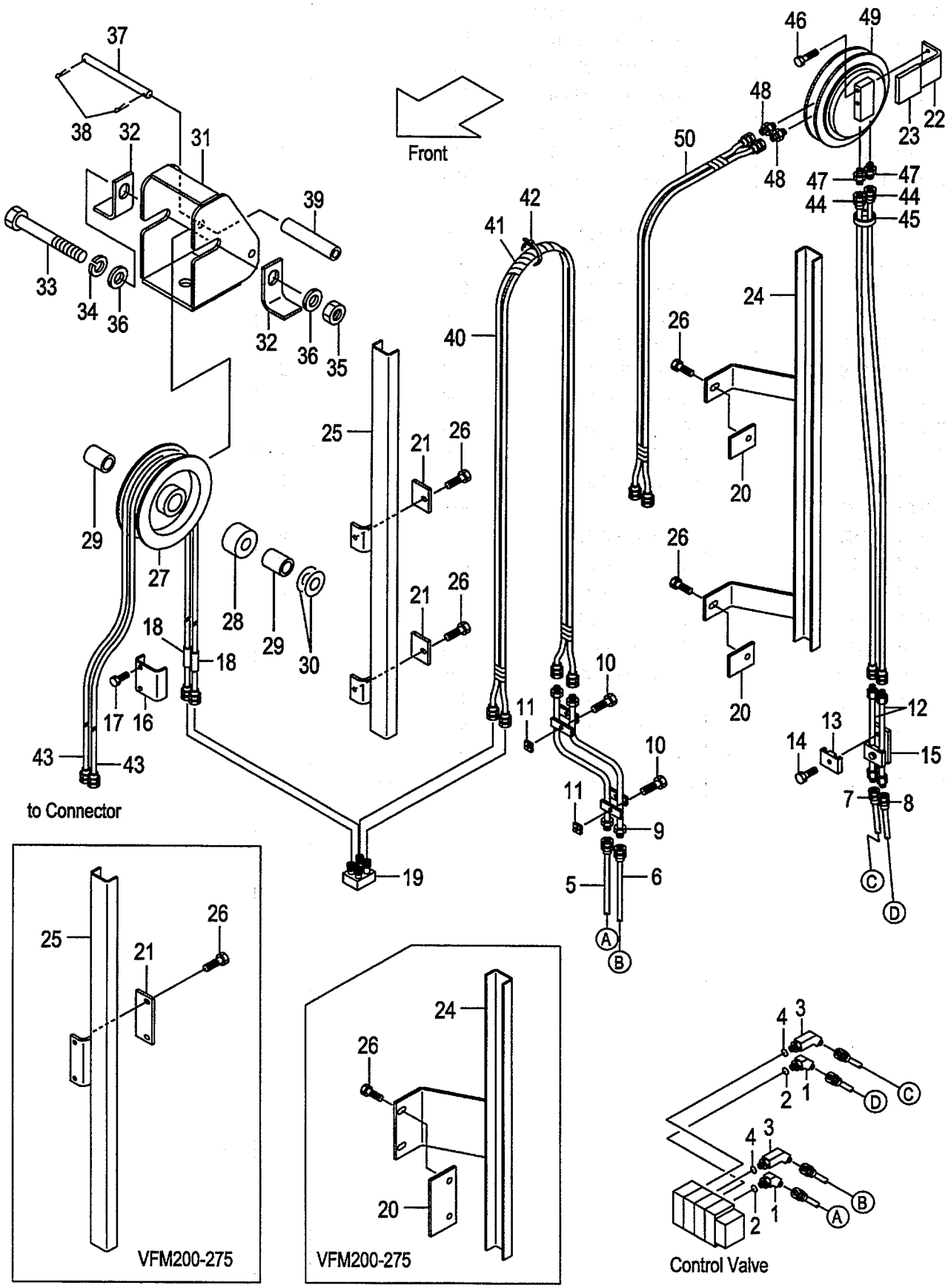

A:AP131F(VFM/J)

Item No	Part No.	Mark	Description		Req'd	Remarks : Serial No.
-	63130-21175		HOSE VFM425	ホース	2	[AR4][ARD][4AP]
-	63130-21190		HOSE VFM450	ホース	2	[AR4][ARD][4AP]
-	63130-21200		HOSE VFM475	ホース	2	[AR4][ARD][4AP]
-	63130-21215		HOSE VFM500	ホース	2	[AR4][ARD][4AP]
-	63130-21235		HOSE VFM550	ホース	2	[AR4][ARD][4AP]
-	63130-21285		HOSE VFM600	ホース	2	[AR4][ARD][4AP]
45	27262-42091		BAND	ﾊﾞﾝﾄﾞ	2	[AR4][ARD][4AP]
46	01184-12065		BOLT	ﾎﾞﾙﾄ	2	[AR4][ARD][4AP]
47	97050-01971		FITTING	ﾌｨｯﾃｨﾝｸﾞ	2	[AR4][ARD][4AP]
48	97060-45111		FITTING	ﾌｨｯﾃｨﾝｸﾞ	2	[AR4][ARD][4AP]
49	61170-23001		REEL,HOSE	ﾘｰﾙ	1	[AR4][ARD][4AP]
50	63130-12621		HOSE	ホース	1	[(AR4,ARD,4AP)/VFM200-475]
-	63130-12601		HOSE	ホース	1	[(AR4,ARD,4AP)/VFM500-600]
51	62170-12611	+	PLATE	ﾌﾟﾚｰﾄ	1	[AR4][ARD][4AP]
52	01183-08016	+	BOLT & WASHER	ﾎﾞﾙﾄ&ﾜｯｼｬ	2	[AR4][ARD][4AP]
K1	BS-51502-08610		KIT,SEAL,REEL	ﾘｰﾙｼｰﾙｷｯﾄ	1	[AR4][ARD][4AP]

HYDRAULIC LINE
FIG.170 (CONT. VALVE-CONNECTOR)[AR5,5AP,ARE]
(A503APB0) ﾊｲﾄﾞﾛﾘｯｸﾗｲﾝ (ｺﾝﾄﾛｰﾙﾊﾞﾙﾌﾞ-ｺﾈｸﾀ)

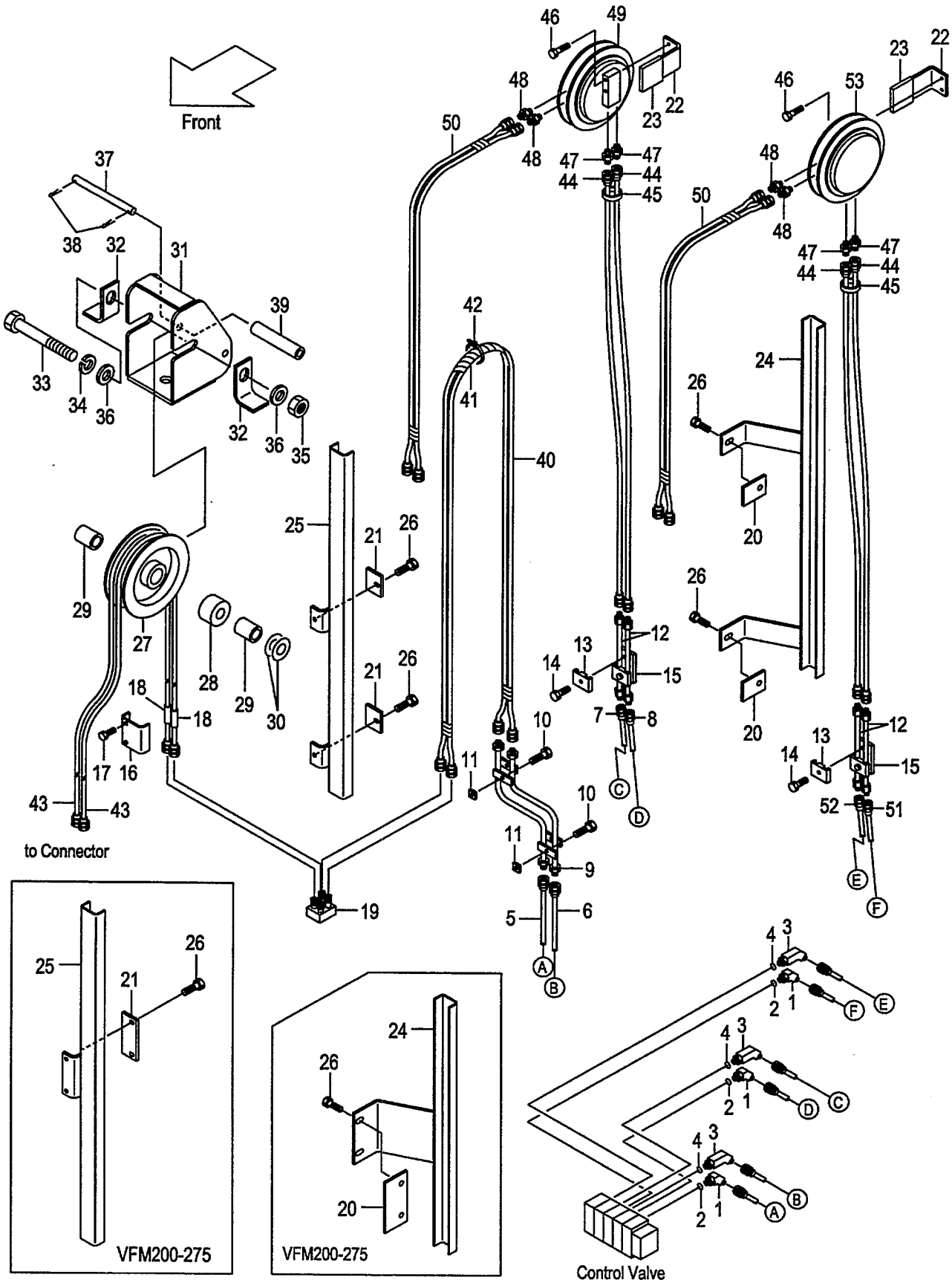

A:AP131F(VFM/J)

Item No	Part No.	Mark	Description		Req'd	Remarks : Serial No.
A1	62160-10021		ELBOW-ASSY	ｴﾙﾎﾞｱｯｾﾝ	2	[AR5][5AP][ARE] INC.1,2
1	63130-12071		ELBOW	ｴﾙﾎﾞ	2	[AR5][5AP][ARE]
2	03320-00140		O-RING	Oﾘﾝｸﾞ	2	[AR5][5AP][ARE]
A2	62160-10001		ELBOW-ASSY	ｴﾙﾎﾞｱｯｾﾝ	2	[AR5][5AP][ARE] INC.3,4
3	62160-10011		ELBOW	ｴﾙﾎﾞ	2	[AR5][5AP][ARE]
4	03320-00140		O-RING	Oﾘﾝｸﾞ	2	[AR5][5AP][ARE]
5	62160-12302		HOSE	ﾎｰｽ	1	[AR5][5AP][ARE]
6	62160-12312		HOSE	ﾎｰｽ	1	[AR5][5AP][ARE]
7	62150-12612		HOSE	ﾎｰｽ	1	[AR5][5AP][ARE]
8	62150-12512		HOSE	ﾎｰｽ	1	[AR5][5AP][ARE]
9	62170-12311		PIPE	ﾊﾟｲﾌﾟ	1	[AR5][5AP][ARE]
10	01183-08016		BOLT	ﾎﾞﾙﾄ	2	[AR5][5AP][ARE]
11	62150-12981		BLOCK,TAPPED	ﾌﾞﾛｯｸ	2	[AR5][5AP][ARE]
12	62160-12401		PIPE	ﾊﾟｲﾌﾟ	4	[AR5][5AP][ARE]
13	63810-12081		BAND	ﾊﾞﾝﾄﾞ	4	[AR5][5AP][ARE]
14	01184-10035		BOLT	ﾎﾞﾙﾄ	4	[AR5][5AP][ARE]
15	63680-12401		BRACKET	ﾌﾞﾗｹｯﾄ	2	[AR5][5AP][ARE]
16	62170-12601		BAND	ﾊﾞﾝﾄﾞ	1	[AR5][5AP][ARE]
17	01183-08035		BOLT	ﾎﾞﾙﾄ	2	[AR5][5AP][ARE]
18	61350-10021		RUBBER	ﾗﾊﾞｰ	2	[AR5][5AP][ARE]
19	62170-12571		STUD	ｽﾀｯﾄﾞ	1	[AR5][5AP][ARE]
20	61150-12311		PLATE	ﾌﾟﾚｰﾄ	1	[(AR5,5AP,ARE)/VFM200-275]
-	61150-12321		PLATE	ﾌﾟﾚｰﾄ	2	[(AR5,5AP,ARE)/VFM300-600]
21	62170-12091		PLATE	ﾌﾟﾚｰﾄ	1	[(AR5,5AP,ARE)/VFM200-275]
-	62170-12081		PLATE	ﾌﾟﾚｰﾄ	2	[(AR5,5AP,ARE)/VFM300-600]
22	62170-12901		BRACKET	ﾌﾞﾗｹｯﾄ	2	[AR5][5AP][ARE]
23	61163-32012		PLATE	ﾌﾟﾚｰﾄ	2	[AR5][5AP][ARE]
24	62170-13001		GUIDE VFM200	ｶﾞｲﾄﾞ	1	[AR5][5AP][ARE]
-	62170-13011		GUIDE VFM225	ｶﾞｲﾄﾞ	1	[AR5][5AP][ARE]
-	62170-13021		GUIDE VFM250	ｶﾞｲﾄﾞ	1	[AR5][5AP][ARE]
-	62170-13031		GUIDE VFM270	ｶﾞｲﾄﾞ	1	[AR5][5AP][ARE]
-	62170-13041		GUIDE VFM275	ｶﾞｲﾄﾞ	1	[AR5][5AP][ARE]
-	62170-12051		GUIDE VFM300	ｶﾞｲﾄﾞ	1	[AR5][5AP][ARE]
-	62170-13051		GUIDE VFM325	ｶﾞｲﾄﾞ	1	[AR5][5AP][ARE]
-	62170-13061		GUIDE VFM330	ｶﾞｲﾄﾞ	1	[AR5][5AP][ARE]
-	62170-13071		GUIDE VFM350	ｶﾞｲﾄﾞ	1	[AR5][5AP][ARE]
-	62170-13081		GUIDE VFM366	ｶﾞｲﾄﾞ	1	[AR5][5AP][ARE]
-	62170-13091		GUIDE VFM370	ｶﾞｲﾄﾞ	1	[AR5][5AP][ARE]
-	62170-13101		GUIDE VFM375	ｶﾞｲﾄﾞ	1	[AR5][5AP][ARE]
-	62170-13111		GUIDE VFM400	ｶﾞｲﾄﾞ	1	[AR5][5AP][ARE]
-	62170-13121		GUIDE VFM425	ｶﾞｲﾄﾞ	1	[AR5][5AP][ARE]
-	62170-13131		GUIDE VFM450	ｶﾞｲﾄﾞ	1	[AR5][5AP][ARE]
-	62170-13141		GUIDE VFM475	ｶﾞｲﾄﾞ	1	[AR5][5AP][ARE]
-	62170-13151		GUIDE VFM500	ｶﾞｲﾄﾞ	1	[AR5][5AP][ARE]
-	62170-13161		GUIDE VFM550	ｶﾞｲﾄﾞ	1	[AR5][5AP][ARE]
-	62170-13171		GUIDE VFM600	ｶﾞｲﾄﾞ	1	[AR5][5AP][ARE]
25	62170-13201		GUIDE VFM200	ｶﾞｲﾄﾞ	1	[AR5][5AP][ARE]
-	62170-13211		GUIDE VFM225	ｶﾞｲﾄﾞ	1	[AR5][5AP][ARE]
-	62170-13221		GUIDE VFM250	ｶﾞｲﾄﾞ	1	[AR5][5AP][ARE]
-	62170-13231		GUIDE VFM270	ｶﾞｲﾄﾞ	1	[AR5][5AP][ARE]

HYDRAULIC LINE
FIG.170 (CONT. VALVE-CONNECTOR)[AR5,5AP,ARE]
(A503APB0) ﾊｲﾄﾞﾛﾘｯｸﾗｲﾝ (ｺﾝﾄﾛｰﾙﾊﾞﾙﾌﾞ-ｺﾈｸﾀ)

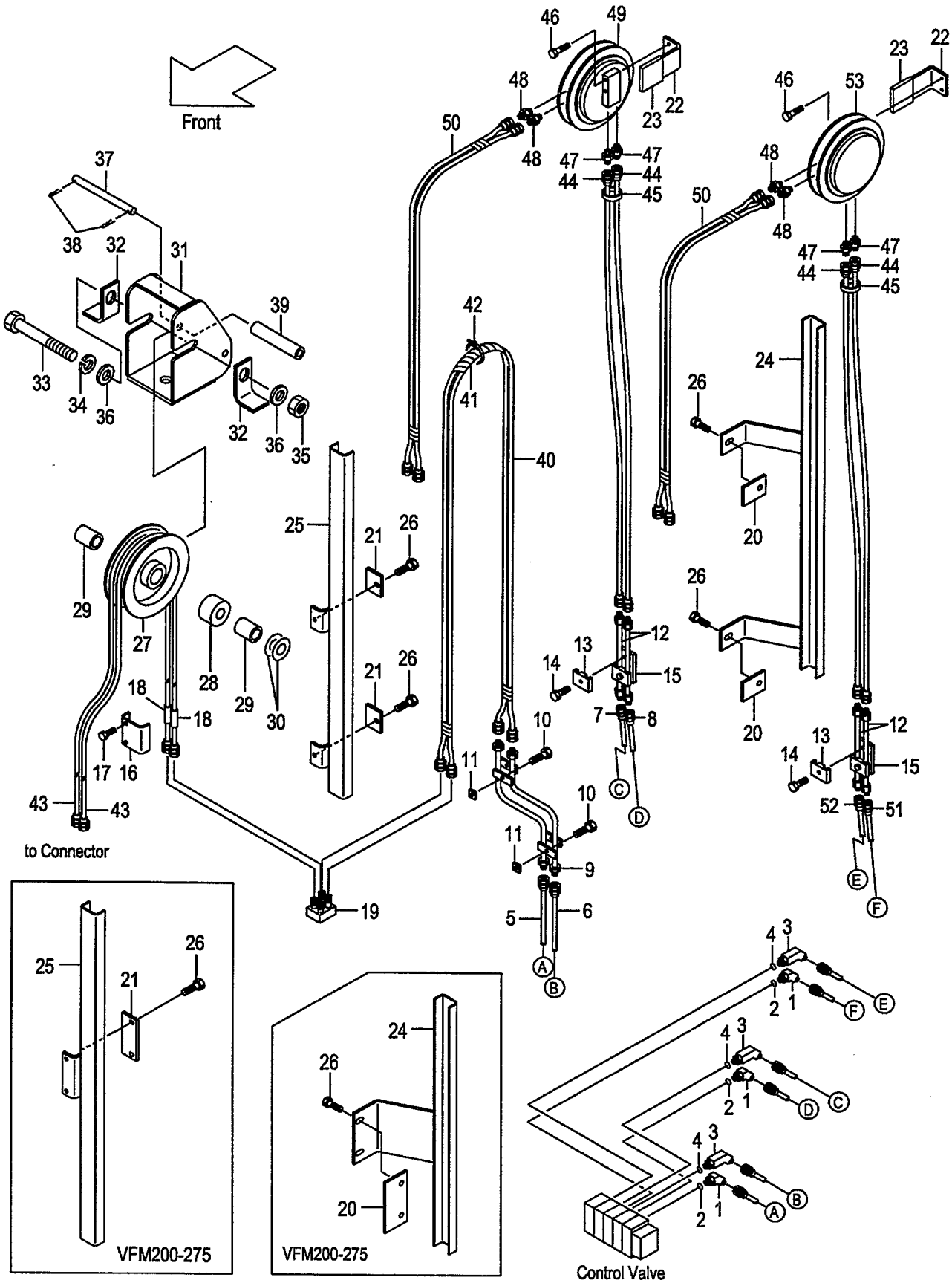

A:AP131F(VFM/J)

Item No	Part No.	Mark	Description		Req'd	Remarks : Serial No.
-	62170-13231		GUIDE VFM275	ｶﾞｲﾄﾞ	1	[AR5][5AP][ARE]
-	62170-12001		GUIDE VFM300	ｶﾞｲﾄﾞ	1	[AR5][5AP][ARE]
-	62170-13241		GUIDE VFM325	ｶﾞｲﾄﾞ	1	[AR5][5AP][ARE]
-	62170-13241		GUIDE VFM330	ｶﾞｲﾄﾞ	1	[AR5][5AP][ARE]
-	62170-13251		GUIDE VFM350	ｶﾞｲﾄﾞ	1	[AR5][5AP][ARE]
-	62170-13261		GUIDE VFM366	ｶﾞｲﾄﾞ	1	[AR5][5AP][ARE]
-	62170-13261		GUIDE VFM370	ｶﾞｲﾄﾞ	1	[AR5][5AP][ARE]
-	62170-13261		GUIDE VFM375	ｶﾞｲﾄﾞ	1	[AR5][5AP][ARE]
-	62170-13271		GUIDE VFM400	ｶﾞｲﾄﾞ	1	[AR5][5AP][ARE]
-	62170-13281		GUIDE VFM425	ｶﾞｲﾄﾞ	1	[AR5][5AP][ARE]
-	62170-13291		GUIDE VFM450	ｶﾞｲﾄﾞ	1	[AR5][5AP][ARE]
-	62170-13301		GUIDE VFM475	ｶﾞｲﾄﾞ	1	[AR5][5AP][ARE]
-	62170-13311		GUIDE VFM500	ｶﾞｲﾄﾞ	1	[AR5][5AP][ARE]
-	62170-13321		GUIDE VFM550	ｶﾞｲﾄﾞ	1	[AR5][5AP][ARE]
-	62170-13331		GUIDE VFM600	ｶﾞｲﾄﾞ	1	[AR5][5AP][ARE]
26	01183-08016		BOLT	ﾎﾞﾙﾄ	4	[AR5][5AP][ARE]
27	62170-12731		PULLEY	ﾌﾟｰﾘ	1	[AR5][5AP][ARE]
28	62170-12671		SPACER	ｽﾍﾟｰｻ	1	[AR5][5AP][ARE]
29	62170-12651		COLLAR	ｶﾗｰ	2	[AR5][5AP][ARE]
30	23917-42191		SHIM	ｼﾑ	2	[AR5][5AP][ARE]
31	62170-12501		BRACKET	ﾌﾞﾗｹｯﾄ	1	[AR5][5AP][ARE]
32	62170-12551		STOPPER	ｽﾄｯﾊﾟ	2	[AR5][5AP][ARE]
33	01100-16140		BOLT	ﾎﾞﾙﾄ	1	[AR5][5AP][ARE]
34	02010-00016		WASHER	ﾜｯｼｬ	1	[AR5][5AP][ARE]
35	01400-00016		NUT	ﾅｯﾄ	1	[AR5][5AP][ARE]
36	02000-00016		WASHER	ﾜｯｼｬ	2	[AR5][5AP][ARE]
37	62170-12701		PIN	ﾋﾟﾝ	1	[AR5][5AP][ARE]
38	02200-32020		PIN	ﾋﾟﾝ	2	[AR5][5AP][ARE]
39	62170-12711		COLLAR	ｶﾗｰ	1	[AR5][5AP][ARE]
40	63300-31090		HOSE VFM200	ﾎｰｽ	1	[AR5][5AP][ARE]
-	63300-31100		HOSE VFM225	ﾎｰｽ	1	[AR5][5AP][ARE]
-	63300-31115		HOSE VFM250	ﾎｰｽ	1	[AR5][5AP][ARE]
-	63300-31125		HOSE VFM270	ﾎｰｽ	1	[AR5][5AP][ARE]
-	63300-31125		HOSE VFM275	ﾎｰｽ	1	[AR5][5AP][ARE]
-	63300-31140		HOSE VFM300	ﾎｰｽ	1	[AR5][5AP][ARE]
-	63300-31150		HOSE VFM325	ﾎｰｽ	1	[AR5][5AP][ARE]
-	63300-31155		HOSE VFM330	ﾎｰｽ	1	[AR5][5AP][ARE]
-	63300-31165		HOSE VFM350	ﾎｰｽ	1	[AR5][5AP][ARE]
-	63300-31170		HOSE VFM366	ﾎｰｽ	1	[AR5][5AP][ARE]
-	63300-31175		HOSE VFM370	ﾎｰｽ	1	[AR5][5AP][ARE]
-	63300-31175		HOSE VFM375	ﾎｰｽ	1	[AR5][5AP][ARE]
-	63300-31185		HOSE VFM400	ﾎｰｽ	1	[AR5][5AP][ARE]
-	63300-31195		HOSE VFM425	ﾎｰｽ	1	[AR5][5AP][ARE]
-	63300-31210		HOSE VFM450	ﾎｰｽ	1	[AR5][5AP][ARE]
-	63300-31220		HOSE VFM475	ﾎｰｽ	1	[AR5][5AP][ARE]
-	63300-31235		HOSE VFM500	ﾎｰｽ	1	[AR5][5AP][ARE]
-	63300-21255		HOSE VFM550	ﾎｰｽ	1	[AR5][5AP][ARE]
-	63300-31280		HOSE VFM600	ﾎｰｽ	1	[AR5][5AP][ARE]
41	27730-62431		LAP,SPIRAL VFM200	ﾗｯﾌﾟ	1	[AR5][5AP][ARE]
-	27730-62431		LAP,SPIRAL VFM225	ﾗｯﾌﾟ	1	[AR5][5AP][ARE]

HYDRAULIC LINE
FIG.170 (CONT. VALVE-CONNECTOR)[AR5,5AP,ARE]
(A503APB0) ﾊｲﾄﾞﾛﾘｯｸﾗｲﾝ (ｺﾝﾄﾛｰﾙﾊﾞﾙﾌﾞ-ｺﾈｸﾀ)

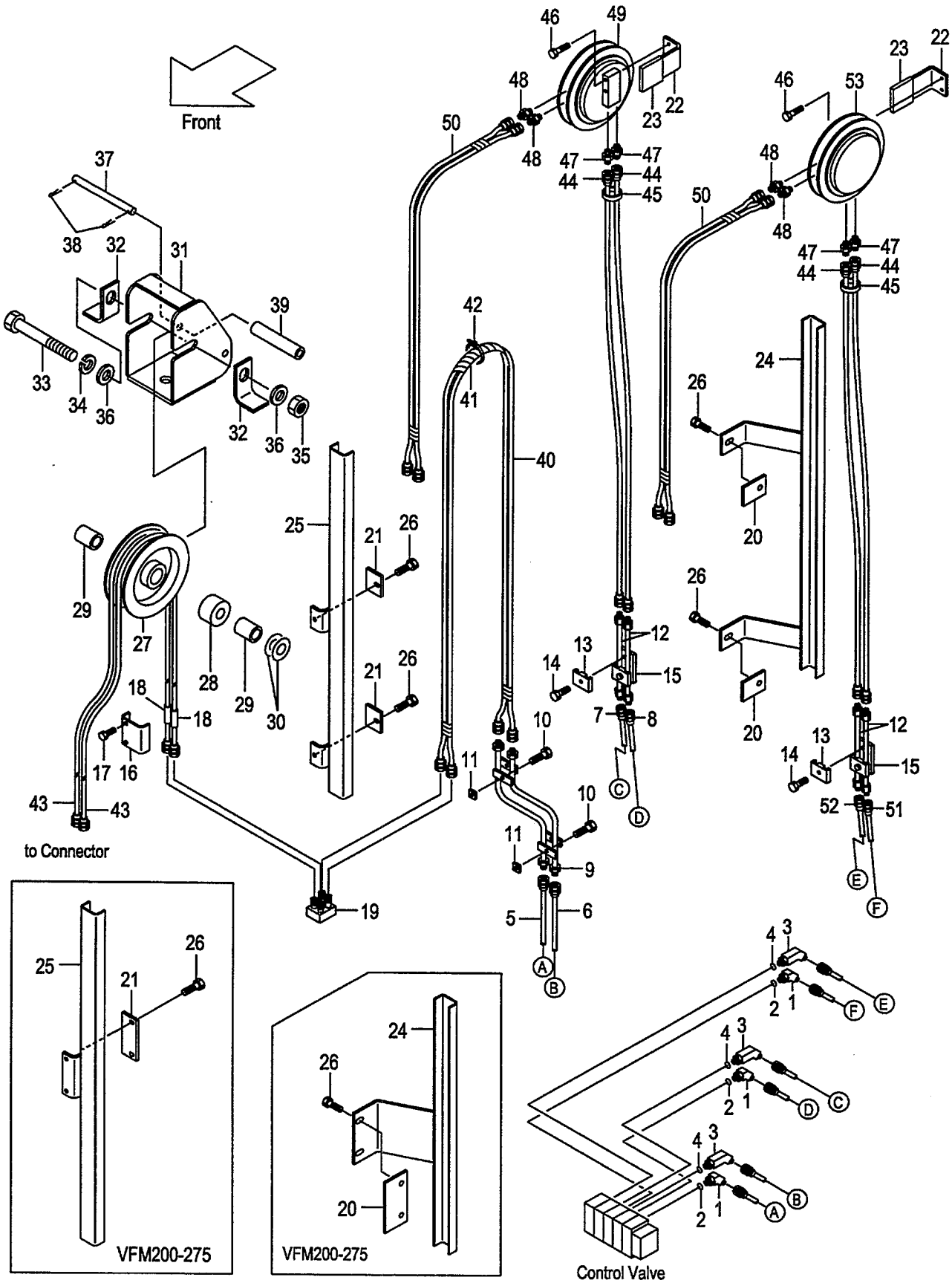

A:AP131F(VFM/J)

Item No	Part No.	Mark	Description		Req'd	Remarks : Serial No.
-	27730-62451		LAP,SPIRAL VFM250	ﾗｯﾌﾟ	1	[AR5][5AP][ARE]
-	27730-62461		LAP,SPIRAL VFM270	ﾗｯﾌﾟ	1	[AR5][5AP][ARE]
-	27730-62461		LAP,SPIRAL VFM275	ﾗｯﾌﾟ	1	[AR5][5AP][ARE]
-	27730-62471		LAP,SPIRAL VFM300	ﾗｯﾌﾟ	1	[AR5][5AP][ARE]
-	27730-62481		LAP,SPIRAL VFM325	ﾗｯﾌﾟ	1	[AR5][5AP][ARE]
-	27730-62481		LAP,SPIRAL VFM330	ﾗｯﾌﾟ	1	[AR5][5AP][ARE]
-	27730-62491		LAP,SPIRAL VFM350	ﾗｯﾌﾟ	1	[AR5][5AP][ARE]
-	27730-62491		LAP,SPIRAL VFM366	ﾗｯﾌﾟ	1	[AR5][5AP][ARE]
-	27730-62491		LAP,SPIRAL VFM370	ﾗｯﾌﾟ	1	[AR5][5AP][ARE]
-	27730-62491		LAP,SPIRAL VFM375	ﾗｯﾌﾟ	1	[AR5][5AP][ARE]
-	62140-12811		LAP,SPIRAL VFM400	ﾗｯﾌﾟ	1	[AR5][5AP][ARE]
-	62140-12811		LAP,SPIRAL VFM425	ﾗｯﾌﾟ	1	[AR5][5AP][ARE]
-	62140-12821		LAP,SPIRAL VFM450	ﾗｯﾌﾟ	1	[AR5][5AP][ARE]
-	62140-12821		LAP,SPIRAL VFM475	ﾗｯﾌﾟ	1	[AR5][5AP][ARE]
-	62140-12831		LAP,SPIRAL VFM500	ﾗｯﾌﾟ	1	[AR5][5AP][ARE]
-	62140-12841		LAP,SPIRAL VFM550	ﾗｯﾌﾟ	1	[AR5][5AP][ARE]
-	62140-12851		LAP,SPIRAL VFM600	ﾗｯﾌﾟ	1	[AR5][5AP][ARE]
42	27132-40181		BAND	ﾊﾞﾝﾄﾞ	5	[AR5][5AP][ARE]
43	04601-33175		HOSE VFM200	ﾎｰｽ	2	[AR5][5AP][ARE]
-	04601-33190		HOSE VFM225	ﾎｰｽ	2	[AR5][5AP][ARE]
-	04601-33200		HOSE VFM250	ﾎｰｽ	2	[AR5][5AP][ARE]
-	04601-33210		HOSE VFM270	ﾎｰｽ	2	[AR5][5AP][ARE]
-	04601-33215		HOSE VFM275	ﾎｰｽ	2	[AR5][5AP][ARE]
-	04601-33225		HOSE VFM300	ﾎｰｽ	2	[AR5][5AP][ARE]
-	04601-33240		HOSE VFM325	ﾎｰｽ	2	[AR5][5AP][ARE]
-	04601-33240		HOSE VFM330	ﾎｰｽ	2	[AR5][5AP][ARE]
-	04601-33250		HOSE VFM350	ﾎｰｽ	2	[AR5][5AP][ARE]
-	04601-33260		HOSE VFM366	ﾎｰｽ	2	[AR5][5AP][ARE]
-	04601-33260		HOSE VFM370	ﾎｰｽ	2	[AR5][5AP][ARE]
-	04601-33265		HOSE VFM375	ﾎｰｽ	2	[AR5][5AP][ARE]
-	04601-33270		HOSE VFM400	ﾎｰｽ	2	[AR5][5AP][ARE]
-	04601-33285		HOSE VFM425	ﾎｰｽ	2	[AR5][5AP][ARE]
-	04601-33295		HOSE VFM450	ﾎｰｽ	2	[AR5][5AP][ARE]
-	04601-33310		HOSE VFM475	ﾎｰｽ	2	[AR5][5AP][ARE]
-	04601-33320		HOSE VFM500	ﾎｰｽ	2	[AR5][5AP][ARE]
-	04601-33340		HOSE VFM550	ﾎｰｽ	2	[AR5][5AP][ARE]
-	04601-33365		HOSE VFM600	ﾎｰｽ	2	[AR5][5AP][ARE]
44	63130-21070		HOSE VFM200	ﾎｰｽ	4	[AR5][5AP][ARE]
-	63130-21080		HOSE VFM225	ﾎｰｽ	4	[AR5][5AP][ARE]
-	63130-21095		HOSE VFM250	ﾎｰｽ	4	[AR5][5AP][ARE]
-	63130-21105		HOSE VFM270	ﾎｰｽ	4	[AR5][5AP][ARE]
-	63130-21105		HOSE VFM275	ﾎｰｽ	4	[AR5][5AP][ARE]
-	63130-21120		HOSE VFM300	ﾎｰｽ	4	[AR5][5AP][ARE]
-	63130-21130		HOSE VFM325	ﾎｰｽ	4	[AR5][5AP][ARE]
-	63130-21135		HOSE VFM330	ﾎｰｽ	4	[AR5][5AP][ARE]
-	63130-21145		HOSE VFM350	ﾎｰｽ	4	[AR5][5AP][ARE]
-	63130-21150		HOSE VFM366	ﾎｰｽ	4	[AR5][5AP][ARE]
-	63130-21150		HOSE VFM370	ﾎｰｽ	4	[AR5][5AP][ARE]
-	63130-21155		HOSE VFM375	ﾎｰｽ	4	[AR5][5AP][ARE]
-	63130-21165		HOSE VFM400	ﾎｰｽ	4	[AR5][5AP][ARE]

HYDRAULIC LINE
FIG.170 (CONT. VALVE-CONNECTOR)[AR5,5AP,ARE]
(A503APB0) ﾊｲﾄﾞﾛﾘｯｸﾗｲﾝ (ｺﾝﾄﾛｰﾙﾊﾞﾙﾌﾞ-ｺﾈｸﾀ)

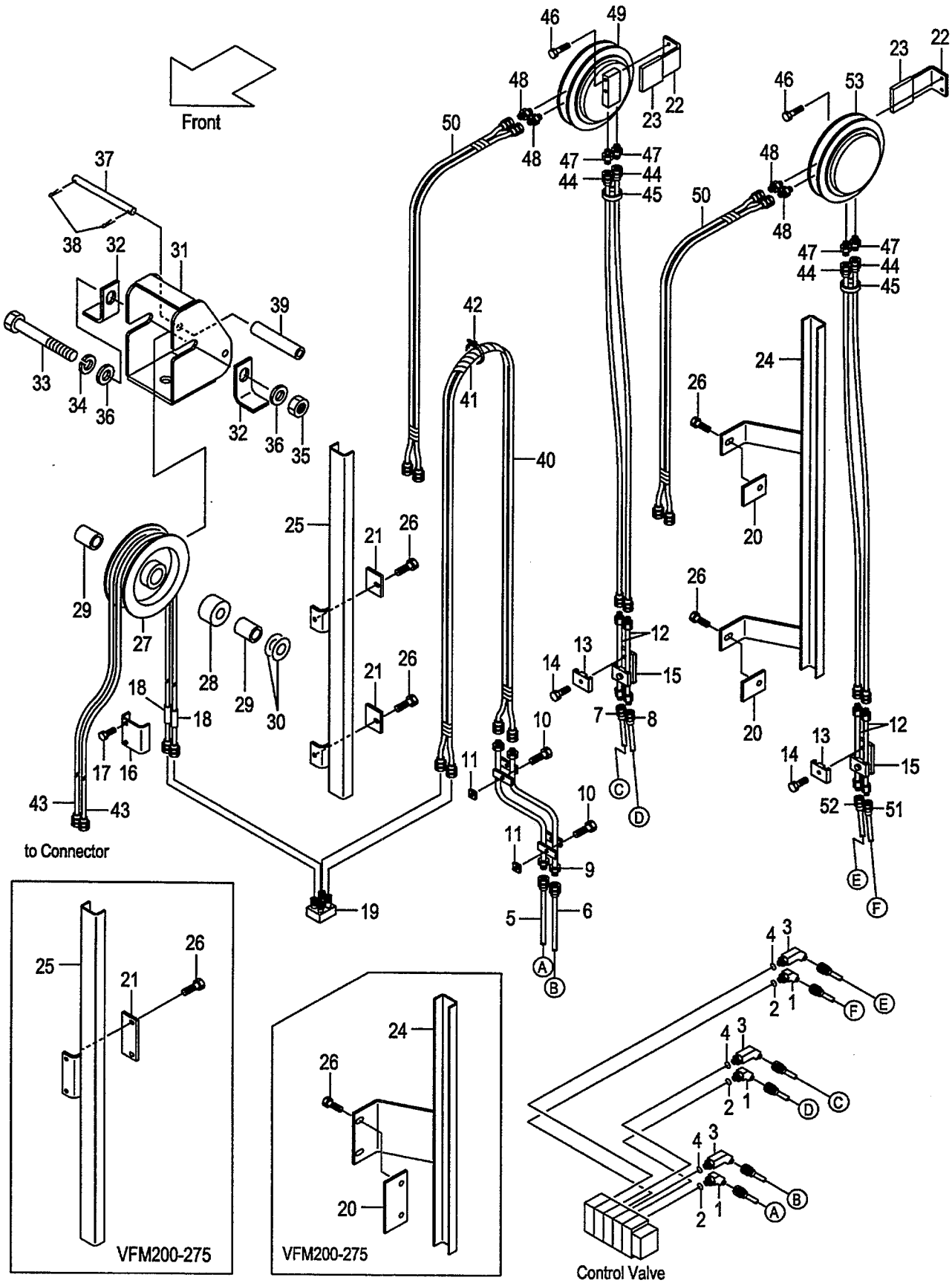

A:AP131F(VFM/J)

Item No	Part No.	Mark	Description		Req'd	Remarks : Serial No.
-	63130-21175		HOSE VFM425	ホース	4	[AR5][5AP][ARE]
-	63130-21190		HOSE VFM450	ホース	4	[AR5][5AP][ARE]
-	63130-21200		HOSE VFM475	ホース	4	[AR5][5AP][ARE]
-	63130-21215		HOSE VFM500	ホース	4	[AR5][5AP][ARE]
-	63130-21235		HOSE VFM550	ホース	4	[AR5][5AP][ARE]
-	63130-21285		HOSE VFM600	ホース	4	[AR5][5AP][ARE]
45	27262-42091		BAND	ﾊﾞﾝﾄﾞ	4	[AR5][5AP][ARE]
46	01184-12065		BOLT	ﾎﾞﾙﾄ	4	[AR5][5AP][ARE]
47	97050-01971		FITTING	ﾌｨｯﾃｨﾝｸﾞ	4	[AR5][5AP][ARE]
48	97060-45111		FITTING	ﾌｨｯﾃｨﾝｸﾞ	4	[AR5][5AP][ARE]
49	61170-23001		REEL,HOSE,RH	ﾘｰﾙ	1	[AR5][5AP][ARE]
50	63130-12621		HOSE	ホース	2	[(AR5,5AP,ARE)/VFM200-475]
-	63130-12601		HOSE	ホース	2	[(AR5,5AP,ARE)/VFM500-600]
51	62150-12522		HOSE	ホース	1	[AR5][5AP][ARE]
52	62150-12532		HOSE	ホース	1	[AR5][5AP][ARE]
53	61170-23011		REEL,HOSE,LH	ﾘｰﾙ	1	[AR5][5AP][ARE]
54	62170-12611	+	PLATE	ﾌﾟﾚｰﾄ	1	[AR5][5AP][ARE]
55	01183-08016	+	BOLT & WASHER	ﾎﾞﾙﾄ&ﾜｯｼｬ	2	[AR5][5AP][ARE]
K1	BS-51502-08610		KIT,SEAL,REEL	ﾘｰﾙｼｰﾙｷｯﾄ	2	[AR5][5AP][ARE]

FIG.171 HYDRAULIC LINE (CONTROL VALVE-CONNECTOR)[A3R,A3S]

(A503APC0) ﾊｲﾄﾞﾛﾘｯｸﾗｲﾝ (ｺﾝﾄﾛｰﾙﾊﾞﾙﾌﾞ-ｺﾈｸﾀ)

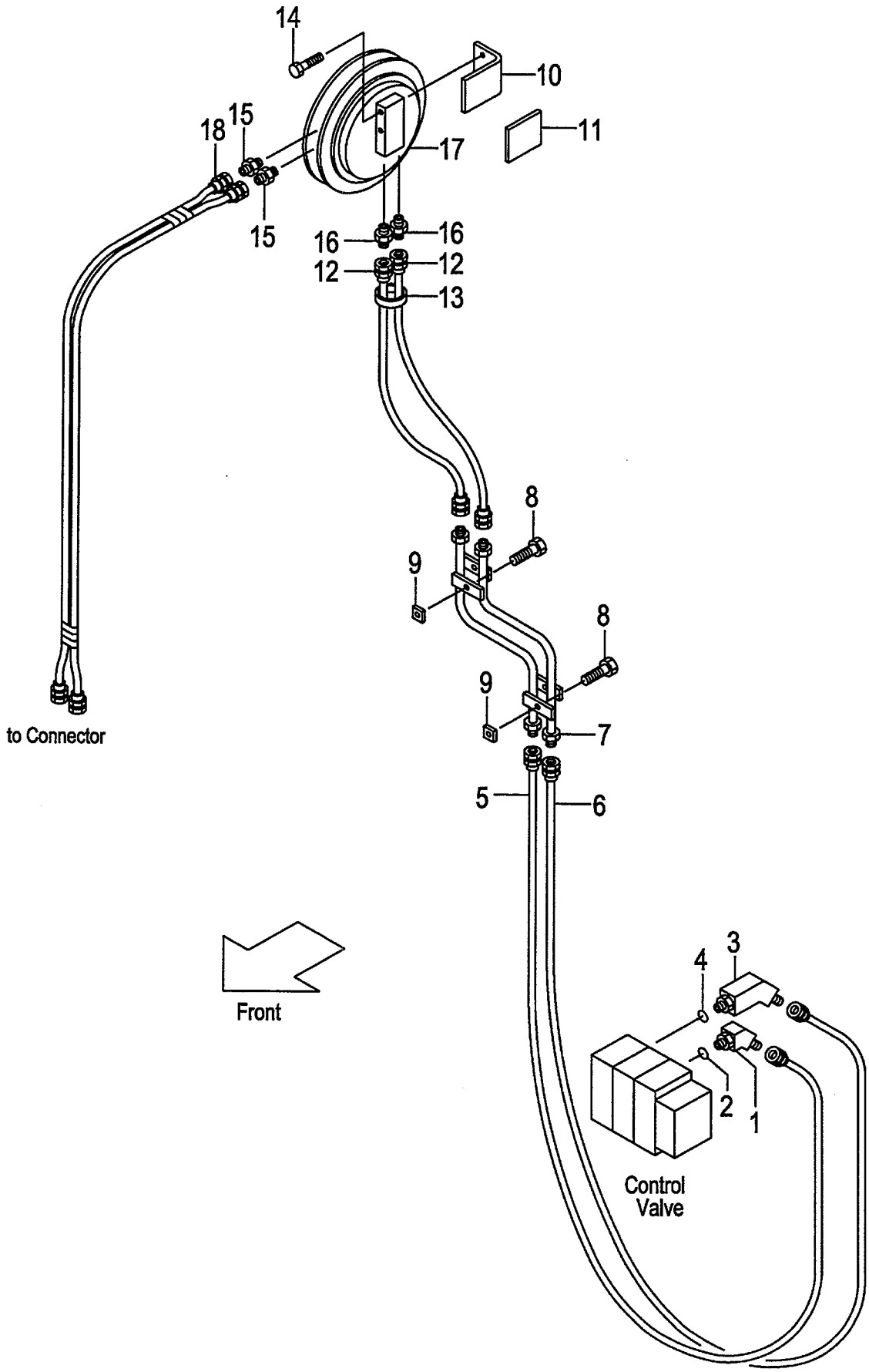

A:AP131F(VFM/J)

Item No	Part No.	Mark	Description		Req'd	Remarks : Serial No.
A1	62160-10021		ELBOW-ASSY	ｴﾙﾎﾞｱｯｾﾝ	1	[A3R][A3S] INC.1,2
1	63130-12071		ELBOW	ｴﾙﾎﾞ	1	[A3R][A3S]
2	03320-00140		O-RING	Oﾘﾝｸﾞ	1	[A3R][A3S]
A2	62160-10001		ELBOW-ASSY	ｴﾙﾎﾞｱｯｾﾝ	1	[A3R][A3S] INC.3,4
3	62160-10011		ELBOW	ｴﾙﾎﾞ	1	[A3R][A3S]
4	03320-00140		O-RING	Oﾘﾝｸﾞ	1	[A3R][A3S]
5	62160-12302		HOSE	ﾎｰｽ	1	[A3R][A3S]
6	62160-12312		HOSE	ﾎｰｽ	1	[A3R][A3S]
7	62170-12311		PIPE	ﾊﾟｲﾌﾟ	1	[A3R][A3S]
8	01183-08016		BOLT	ﾎﾞﾙﾄ	2	[A3R][A3S]
9	62150-12981		BLOCK	ﾌﾞﾛｯｸ	2	[A3R][A3S]
10	62170-12901		BRACKET	ﾌﾞﾗｹｯﾄ	1	[A3R][A3S]
11	61163-32012		PLATE	ﾌﾟﾚｰﾄ	1	[A3R][A3S]
12	63130-21070		HOSE VFM200	ﾎｰｽ	2	[A3R][A3S]
-	63130-21080		HOSE VFM225	ﾎｰｽ	2	[A3R][A3S]
-	63130-21095		HOSE VFM250	ﾎｰｽ	2	[A3R][A3S]
-	63130-21105		HOSE VFM270	ﾎｰｽ	2	[A3R][A3S]
-	63130-21105		HOSE VFM275	ﾎｰｽ	2	[A3R][A3S]
-	63130-21120		HOSE VFM300	ﾎｰｽ	2	[A3R][A3S]
-	63130-21130		HOSE VFM325	ﾎｰｽ	2	[A3R][A3S]
-	63130-21135		HOSE VFM330	ﾎｰｽ	2	[A3R][A3S]
-	63130-21145		HOSE VFM350	ﾎｰｽ	2	[A3R][A3S]
-	63130-21150		HOSE VFM366	ﾎｰｽ	2	[A3R][A3S]
-	63130-21150		HOSE VFM370	ﾎｰｽ	2	[A3R][A3S]
-	63130-21155		HOSE VFM375	ﾎｰｽ	2	[A3R][A3S]
-	63130-21165		HOSE VFM400	ﾎｰｽ	2	[A3R][A3S]
-	63130-21175		HOSE VFM425	ﾎｰｽ	2	[A3R][A3S]
-	63130-21190		HOSE VFM450	ﾎｰｽ	2	[A3R][A3S]
-	63130-21200		HOSE VFM475	ﾎｰｽ	2	[A3R][A3S]
-	63130-21215		HOSE VFM500	ﾎｰｽ	2	[A3R][A3S]
-	63130-21235		HOSE VFM550	ﾎｰｽ	2	[A3R][A3S]
-	63130-21285		HOSE VFM600	ﾎｰｽ	2	[A3R][A3S]
13	27262-42091		BAND	ﾊﾞﾝﾄﾞ	2	[A3R][A3S]
14	01184-12065		BOLT	ﾎﾞﾙﾄ	2	[A3R][A3S]
15	97050-01971		FITTING	ﾌｨｯﾃｨﾝｸﾞ	2	[A3R][A3S]
16	97060-45111		FITTING	ﾌｨｯﾃｨﾝｸﾞ	2	[A3R][A3S]
17	61170-23001		REEL,HOSE	ﾘｰﾙ	1	[A3R][A3S]
18	63130-12621		HOSE	ﾎｰｽ	1	[(A3R,A3S)/VFM200-475]
-	63130-12601		HOSE	ﾎｰｽ	1	[(A3R,A3S)/VFM500-600]
K1	BS-51502-08610		KIT,SEAL,REEL	ﾘｰﾙｼｰﾙｷｯﾄ	1	[A3R][A3S]

FIG.172 HYDRAULIC LINE (CONTROL VALVE-CONNECTOR)[A4R,A4S]

(A503APD0) ﾊｲﾄﾞﾛﾘｯｸﾗｲﾝ (ｺﾝﾄﾛｰﾙﾊﾞﾙﾌﾞ-ｺﾈｸﾀ)

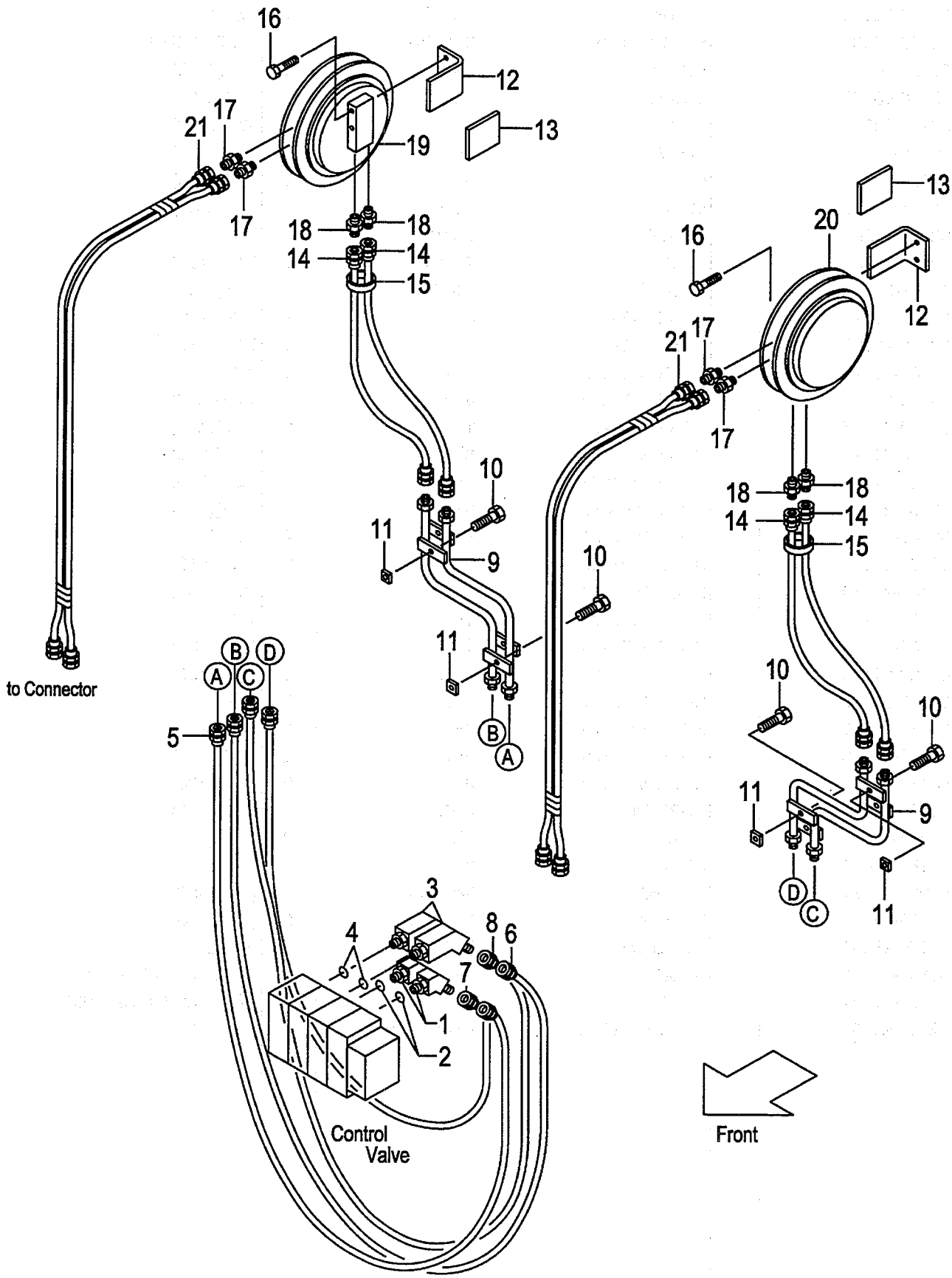

A:AP131F(VFM/J)

Item No	Part No.	Mark	Description		Req'd	Remarks : Serial No.
A1	62160-10021		ELBOW-ASSY	ｴﾙﾎﾞｱｯｾﾝ	2	[A4R][A4S] INC.1,2
1	63130-12071		ELBOW	ｴﾙﾎﾞ	2	[A4R][A4S]
2	03320-00140		O-RING	Oﾘﾝｸﾞ	2	[A4R][A4S]
A2	62160-10001		ELBOW-ASSY	ｴﾙﾎﾞｱｯｾﾝ	2	[A4R][A4S] INC.3,4
3	62160-10011		ELBOW	ｴﾙﾎﾞ	2	[A4R][A4S]
4	03320-00140		O-RING	Oﾘﾝｸﾞ	2	[A4R][A4S]
5	62160-12302		HOSE	ﾎｰｽ	2	[A4R][A4S]
6	62160-12312		HOSE	ﾎｰｽ	2	[A4R][A4S]
7	62150-12522		HOSE	ﾎｰｽ	1	[A4R][A4S]
8	62150-12532		HOSE	ﾎｰｽ	1	[A4R][A4S]
9	62170-12311		PIPE	ﾊﾟｲﾌﾟ	2	[A4R][A4S]
10	01183-08016		BOLT	ﾎﾞﾙﾄ	4	[A4R][A4S]
11	62150-12981		BLOCK	ﾌﾞﾛｯｸ	4	[A4R][A4S]
12	62170-12901		BRACKET	ﾌﾞﾗｹｯﾄ	2	[A4R][A4S]
13	61163-32012		PLATE	ﾌﾟﾚｰﾄ	2	[A4R][A4S]
14	63130-21070		HOSE VFM200	ﾎｰｽ	4	[A4R][A4S]
-	63130-21080		HOSE VFM225	ﾎｰｽ	4	[A4R][A4S]
-	63130-21095		HOSE VFM250	ﾎｰｽ	4	[A4R][A4S]
-	63130-21105		HOSE VFM270	ﾎｰｽ	4	[A4R][A4S]
-	63130-21105		HOSE VFM275	ﾎｰｽ	4	[A4R][A4S]
-	63130-21120		HOSE VFM300	ﾎｰｽ	4	[A4R][A4S]
-	63130-21130		HOSE VFM325	ﾎｰｽ	4	[A4R][A4S]
-	63130-21135		HOSE VFM330	ﾎｰｽ	4	[A4R][A4S]
-	63130-21145		HOSE VFM350	ﾎｰｽ	4	[A4R][A4S]
-	63130-21150		HOSE VFM366	ﾎｰｽ	4	[A4R][A4S]
-	63130-21150		HOSE VFM370	ﾎｰｽ	4	[A4R][A4S]
-	63130-21155		HOSE VFM375	ﾎｰｽ	4	[A4R][A4S]
-	63130-21165		HOSE VFM400	ﾎｰｽ	4	[A4R][A4S]
-	63130-21175		HOSE VFM425	ﾎｰｽ	4	[A4R][A4S]
-	63130-21190		HOSE VFM450	ﾎｰｽ	4	[A4R][A4S]
-	63130-21200		HOSE VFM475	ﾎｰｽ	4	[A4R][A4S]
-	63130-21215		HOSE VFM500	ﾎｰｽ	4	[A4R][A4S]
-	63130-21235		HOSE VFM550	ﾎｰｽ	4	[A4R][A4S]
-	63130-21285		HOSE VFM600	ﾎｰｽ	4	[A4R][A4S]
15	27262-42091		BAND	ﾊﾞﾝﾄﾞ	4	[A4R][A4S]
16	01184-12065		BOLT	ﾎﾞﾙﾄ	4	[A4R][A4S]
17	97050-01971		FITTING	ﾌｨｯﾃｨﾝｸﾞ	4	[A4R][A4S]
18	97060-45111		FITTING	ﾌｨｯﾃｨﾝｸﾞ	4	[A4R][A4S]
19	61170-23001		REEL,HOSE,RH	ﾘｰﾙ	1	[A4R][A4S]
20	61170-23011		REEL,HOSE,LH	ﾘｰﾙ	1	[A4R][A4S]
21	63130-12621		HOSE	ﾎｰｽ	2	[(A4R,A4S)/VFM200-475]
-	63130-12601		HOSE	ﾎｰｽ	2	[(A4R,A4S)/VFM500-600]
K1	BS-51502-08610		KIT,SEAL,REEL	ﾘｰﾙｼｰﾙｷｯﾄ	2	[A4R][A4S]

FIG.173 HYDRAULIC LINE (RELIEF VALVE)[VRV]

(A503APE0) ﾊｲﾄﾞﾛﾘｯｸﾗｲﾝ (ﾘﾘｰﾌﾊﾞﾙﾌﾞ)

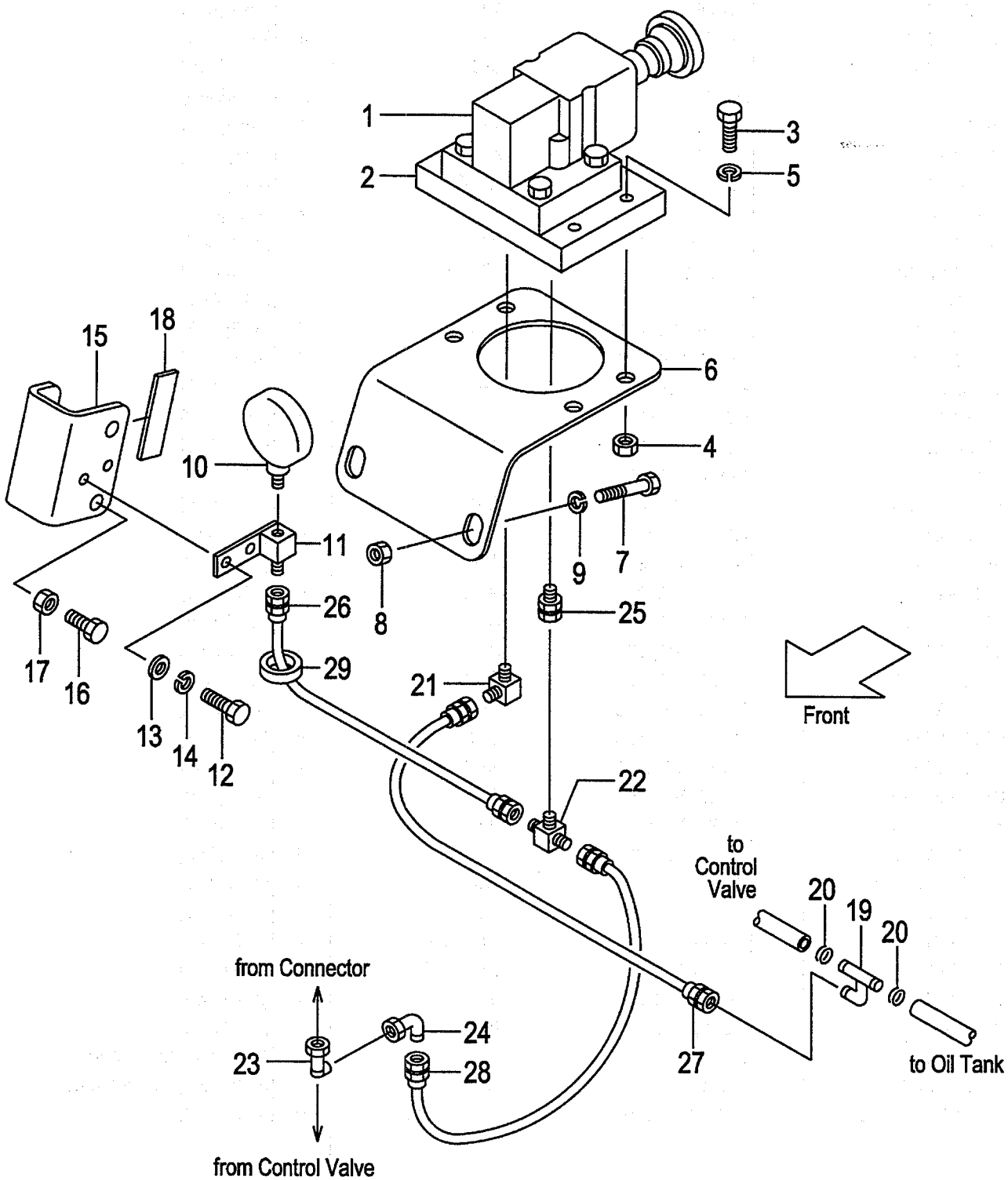

A:AP131F(VFM/J)

Item No	Part No.	Mark	Description		Req'd	Remarks : Serial No.
1	63130-15771		VALVE,RELIEF	ﾊﾞﾙﾌﾞ	1	[VRV]
2	63130-15921		PLATE	ﾌﾟﾚｰﾄ	1	[VRV]
3	01181-08030		BOLT	ﾎﾞﾙﾄ	4	[VRV]
4	01400-00008		NUT	ﾅｯﾄ	4	[VRV]
5	02010-00008		WASHER	ﾜｯｼｬ	4	[VRV]
6	61170-10151		BRACKET	ﾌﾞﾗｹｯﾄ	1	[VRV]
7	01181-10025		BOLT	ﾎﾞﾙﾄ	2	[VRV]
8	01400-00010		NUT	ﾅｯﾄ	2	[VRV]
9	02010-00010		WASHER	ﾜｯｼｬ	2	[VRV]
10	63110-20221		GAUGE	ｹﾞｰｼﾞ	1	[VRV]
11	62150-14041		STUD	ｽﾀｯﾄﾞ	1	[VRV]
12	01100-08012		BOLT	ﾎﾞﾙﾄ	2	[VRV]
13	02000-00008		WASHER	ﾜｯｼｬ	2	[VRV]
14	02010-00008		WASHER	ﾜｯｼｬ	2	[VRV]
15	61170-10101		BRACKET	ﾌﾞﾗｹｯﾄ	1	[VRV]
16	01100-10016		BOLT	ﾎﾞﾙﾄ	2	[VRV]
17	01402-00010		NUT	ﾅｯﾄ	2	[VRV]
18	61170-10111		RUBBER	ﾗﾊﾞｰ	1	[VRV]
19	62150-14011		PIPE	ﾊﾟｲﾌﾟ	1	[VRV]
20	63110-20261		CLIP	ｸﾘｯﾌﾟ	2	[VRV]
21	53110-12121		ELBOW	ｴﾙﾎﾞ	1	[VRV]
22	61170-10201		THREE-WAY	ｽﾘｰｳｴｲ	1	[VRV]
23	62150-14001		THREE-WAY	ｽﾘｰｳｴｲ	1	[VRV]
24	62150-14311		ELBOW	ｴﾙﾎﾞ	1	[VRV]
25	04138-00303		UNION	ﾕﾆｵﾝ	1	[VRV]
26	63130-31055		HOSE	ﾎｰｽ	1	[VRV]
27	63130-21085		HOSE	ﾎｰｽ	1	[VRV]
28	63130-21120		HOSE	ﾎｰｽ	1	[VRV]
29	04913-11300		BAND	ﾊﾞﾝﾄﾞ	2	[VRV]
30	63130-12751	+	PLUG	ﾌﾟﾗｸﾞ	1	[VRV]

FIG.174 LAMP BRACKET [AP131F]

(A503APF0) ﾗﾝﾌﾟﾌﾞﾗｹｯﾄ

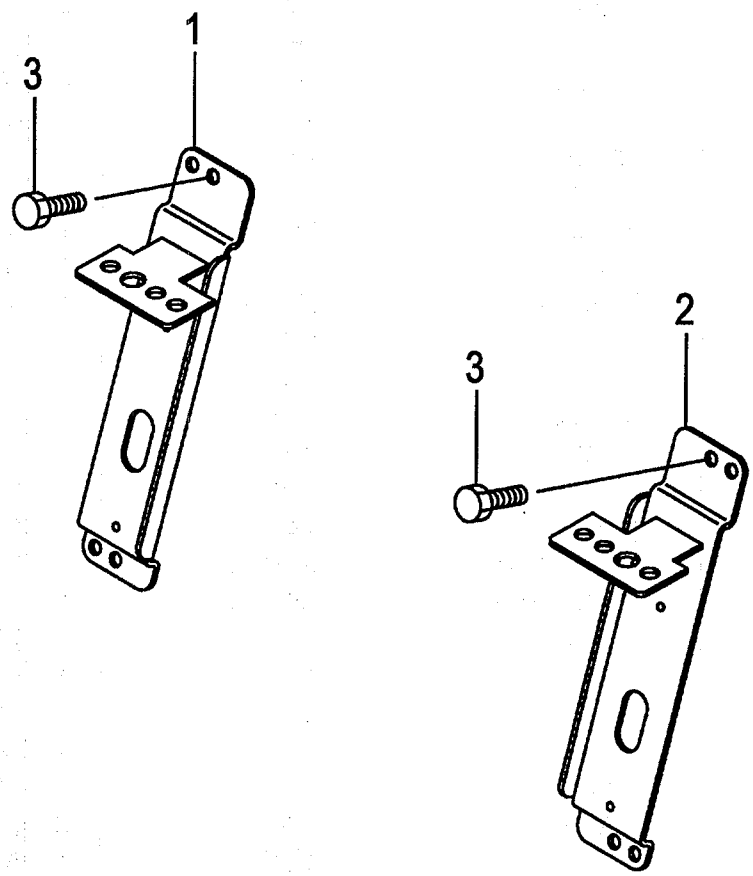

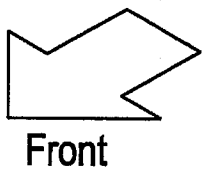

FIG.174
(A503APF0)

A:AP131F(VFM/J)

Item No	Part No.	Mark	Description		Req'd	Remarks : Serial No.
1	239A5-12521		BRACKET,RH	ﾌﾞﾗｹｯﾄ	1	
2	239A5-12501		BRACKET,LH	ﾌﾞﾗｹｯﾄ	1	
3	01183-08016		BOLT	ﾎﾞﾙﾄ	4	
4	04913-11100	+	BAND	ﾊﾞﾝﾄﾞ	2	
5	239A2-42221	+	WIRE-HARNESS,HG	ﾜｲﾔﾊｰﾈｽ	2	
6	216G2-40602	+	LAMP,HEAD	ﾗﾝﾌﾟ	2	INC.7
7	216G2-40611	+	BULB,12V/55W	ﾊﾞﾙﾌﾞ	1	
8	216G2-40701	+	LAMP,COMBI.,FRONT	ﾗﾝﾌﾟ	2	INC.9-11
9	216G2-40711	+	BULB,TURN-SIGNAL	ﾊﾞﾙﾌﾞ	1	
10	216G2-40721	+	BULB,12V/10W	ﾊﾞﾙﾌﾞ	1	
11	216G2-40731	+	LENS	ﾚﾝｽﾞ	1	

FIG.175 LAMP BKT.[AP131F/(AR4,AR5,4AP,5AP,ARD, ARE,A3R,A4R,A3S,A4S)]

(A503APG0) ﾗﾝﾌﾟﾌﾞﾗｹｯﾄ

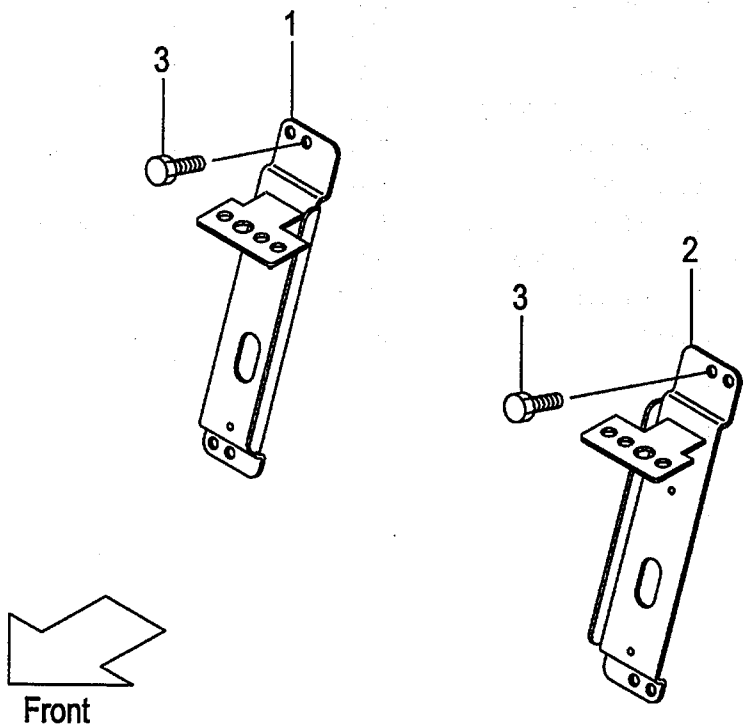

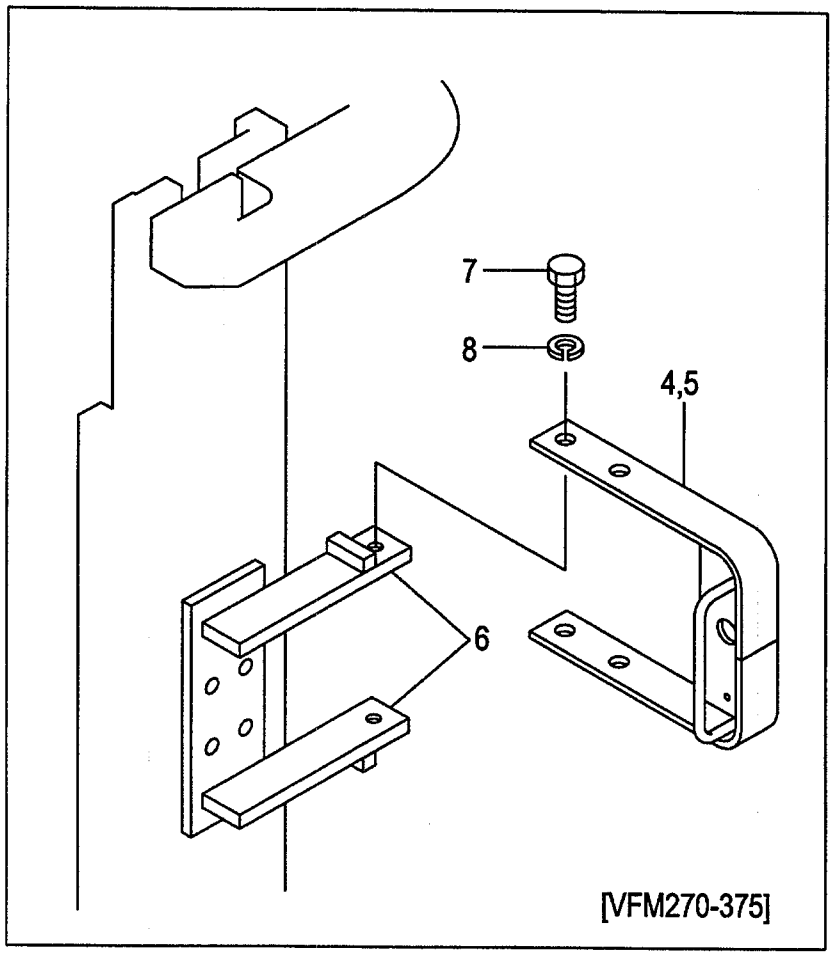

A:AP131F(VFM/J)

Item No	Part No.	Mark	Description		Req'd	Remarks : Serial No.
1	239A5-12521		BRACKET,RH	ﾌﾞﾗｹｯﾄ	1	[(AR4,AR5,4AP,5AP,ARD,ARE) /(VFM200-250,400-600)]
-	239A5-12521		BRACKET,RH	ﾌﾞﾗｹｯﾄ	1	[(A3R,A4R,A3S,A4S) /(VFM200-250,400-600)]
2	239A5-12501		BRACKET,LH	ﾌﾞﾗｹｯﾄ	1	[(AR4,AR5,4AP,5AP,ARD,ARE) /(VFM200-250,400-600)]
-	239A5-12501		BRACKET,LH	ﾌﾞﾗｹｯﾄ	1	[(A3R,A4R,A3S,A4S) /(VFM200-250,400-600)]
3	01183-08016		BOLT	ﾎﾞﾙﾄ	4	[(AR4,AR5,4AP,5AP,ARD,ARE) /(VFM200-250,400-600)]
-	01183-08016		BOLT	ﾎﾞﾙﾄ	4	[(A3R,A4R,A3S,A4S) /(VFM200-250,400-600)]
4	534A9-22001		BRACKET,RH	ﾌﾞﾗｹｯﾄ	1	[(AR4,AR5,4AP,5AP,ARD,ARE) /VFM270-375]
-	534A9-22001		BRACKET,RH	ﾌﾞﾗｹｯﾄ	1	[(A3R,A4R,A3S,A4S)/VFM270-375]
5	534A9-22011		BRACKET,LH	ﾌﾞﾗｹｯﾄ	1	[(AR4,AR5,4AP,5AP,ARD,ARE) /VFM270-375]
-	534A9-22011		BRACKET,LH	ﾌﾞﾗｹｯﾄ	1	[(A3R,A4R,A3S,A4S)/VFM270-375]
6	621B0-12641		BRACKET	ﾌﾞﾗｹｯﾄ	4	[(AR4,AR5,4AP,5AP,ARD,ARE) /VFM270-375]
-	621B0-12641		BRACKET	ﾌﾞﾗｹｯﾄ	4	[(A3R,A4R,A3S,A4S)/VFM270-375]
7	01100-12020		BOLT	ﾎﾞﾙﾄ	4	[(AR4,AR5,4AP,5AP,ARD,ARE) /VFM270-375]
-	01100-12020		BOLT	ﾎﾞﾙﾄ	4	[(A3R,A4R,A3S,A4S)/VFM270-375]
8	02010-00012		WASHER	ﾜｯｼｬ	4	[(AR4,AR5,4AP,5AP,ARD,ARE) /VFM270-375]
-	02010-00012		WASHER	ﾜｯｼｬ	4	[(A3R,A4R,A3S,A4S)/VFM270-375]
9	239A2-42221	+	WIRE-HARNESS,HG	ﾜｲﾔﾊｰﾈｽ	2	[(AR4,AR5,4AP,5AP,ARD,ARE) /(VFM200-250,400-600)]
-	239A2-42221	+	WIRE-HARNESS,HG	ﾜｲﾔﾊｰﾈｽ	2	[(A3R,A4R,A3S,A4S) /(VFM200-250,400-600)]
-	534A9-22201	+	WIRE-HARNESS,HG	ﾜｲﾔﾊｰﾈｽ	2	[(AR4,AR5,4AP,5AP,ARD,ARE) /VFM270-300]
-	534A9-22201	+	WIRE-HARNESS,HG	ﾜｲﾔﾊｰﾈｽ	2	[(A3R,A4R,A3S,A4S)/VFM270-300]
-	534A9-22211	+	WIRE-HARNESS,HG	ﾜｲﾔﾊｰﾈｽ	2	[(AR4,AR5,4AP,5AP,ARD,ARE) /VFM325-375]
-	534A9-22211	+	WIRE-HARNESS,HG	ﾜｲﾔﾊｰﾈｽ	2	[(A3R,A4R,A3S,A4S)/VFM325-375]
10	27732-42221	+	CLAMP	ｸﾗﾝﾌﾟ	2	[(AR4,AR5,4AP,5AP,ARD,ARE) /VFM270-375]
-	27732-42221	+	CLAMP	ｸﾗﾝﾌﾟ	2	[(A3R,A4R,A3S,A4S)/VFM270-375]
11	04913-11100	+	BAND	ﾊﾞﾝﾄﾞ	2	[(AR4,AR5,4AP,5AP,ARD,ARE) /(VFM200-250,400-600)]
-	04913-11100	+	BAND	ﾊﾞﾝﾄﾞ	2	[(A3R,A4R,A3S,A4S) /(VFM200-250,400-600)]
-	04913-11380	+	BAND	ﾊﾞﾝﾄﾞ	4	[(AR4,AR5,4AP,5AP,ARD,ARE) /VFM270-300]
-	04913-11380	+	BAND	ﾊﾞﾝﾄﾞ	4	[(A3R,A4R,A3S,A4S)/VFM270-300]
-	04913-11380	+	BAND	ﾊﾞﾝﾄﾞ	6	[(AR4,AR5,4AP,5AP,ARD,ARE) /VFM325-375]
-	04913-11380	+	BAND	ﾊﾞﾝﾄﾞ	6	[(A3R,A4R,A3S,A4S)/VFM325-375]

FIG.175 LAMP BKT.[AP131F/(AR4,AR5,4AP,5AP,ARD, ARE,A3R,A4R,A3S,A4S)]

(A503APG0) ﾗﾝﾌﾟﾌﾞﾗｹｯﾄ

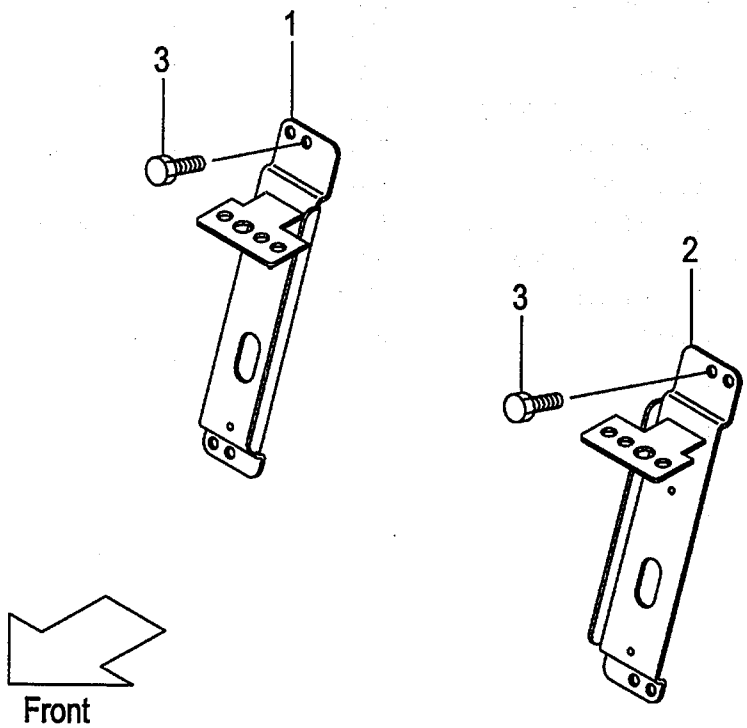

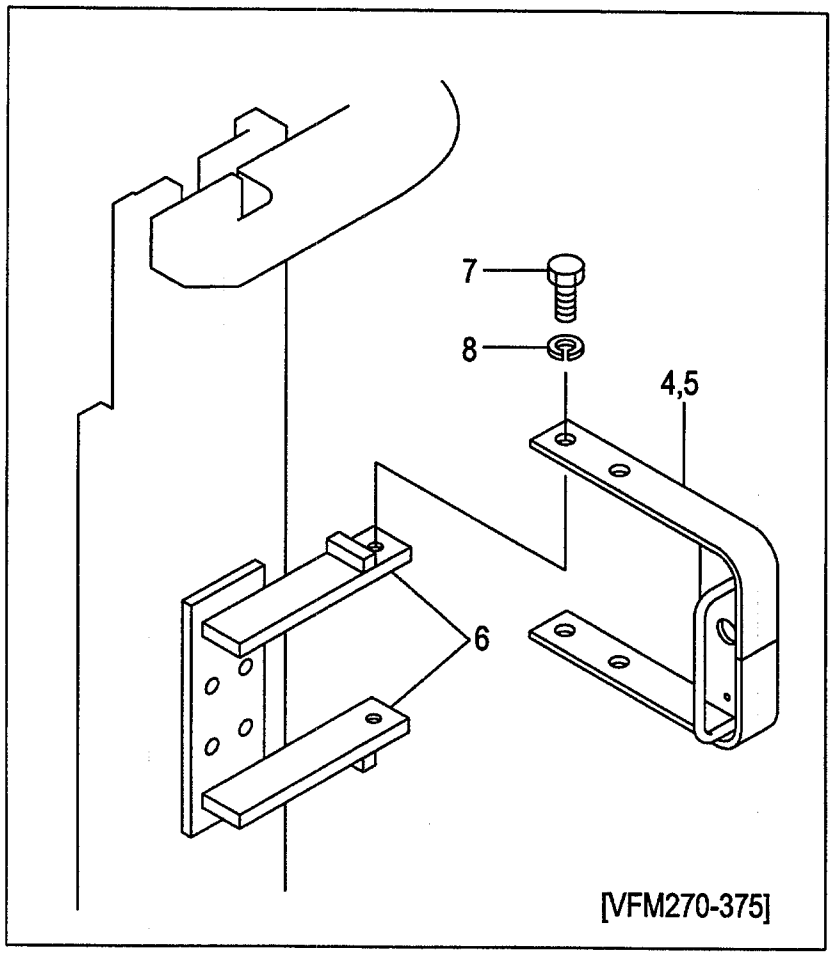

A:AP131F(VFM/J)

Item No	Part No.	Mark	Description		Req'd	Remarks : Serial No.
12	534A9-22301	+	PLATE	ﾌﾟﾚｰﾄ	2	[(AR4,AR5,4AP,5AP,ARD,ARE) /VFM270-375]
-	534A9-22301	+	PLATE	ﾌﾟﾚｰﾄ	2	[(A3R,A4R,A3S,A4S)/VFM270-375]
13	216G2-40602	+	LAMP,HEAD	ﾗﾝﾌﾟ	2	[AR4][AR5][4AP][5AP][ARD] [ARE] INC.14
-	216G2-40602	+	LAMP,HEAD	ﾗﾝﾌﾟ	2	[A3R][A4R][A3S][A4S] INC.14
14	216G2-40611	+	BULB,12V/55W	ﾊﾞﾙﾌﾞ	1	[AR4][AR5][4AP][5AP][ARD] [ARE][A3R][A4R][A3S][A4S]
15	216G2-40701	+	LAMP,COMBI.,FRONT	ﾗﾝﾌﾟ	2	[AR4][AR5][4AP][5AP][ARD] [ARE] INC.16-18
-	216G2-40701	+	LAMP,COMBI.,FRONT	ﾗﾝﾌﾟ	2	[A3R][A4R][A3S][A4S] INC.16-18
16	216G2-40711	+	BULB,TURN-SIGNAL	ﾊﾞﾙﾌﾞ	1	[AR4][AR5][4AP][5AP][ARD] [ARE][A3R][A4R][A3S][A4S]
17	216G2-40721	+	BULB,12V/10W	ﾊﾞﾙﾌﾞ	1	[AR4][AR5][4AP][5AP][ARD] [ARE][A3R][A4R][A3S][A4S]
18	216G2-40731	+	LENS	ﾚﾝｽﾞ	1	[AR4][AR5][4AP][5AP][ARD] [ARE][A3R][A4R][A3S][A4S]
19	01183-08016	+	BOLT	ﾎﾞﾙﾄ	4	[(AR4,AR5,4AP,5AP,ARD,ARE) /VFM270-375]
-	01183-08016	+	BOLT	ﾎﾞﾙﾄ	4	[(A3R,A4R,A3S,A4S)/VFM270-375]
20	534A9-22301	+	PLATE	ﾌﾟﾚｰﾄ	2	[(AR4,AR5,4AP,5AP,ARD,ARE) /VFM270-375]
-	534A9-22301	+	PLATE	ﾌﾟﾚｰﾄ	2	[(A3R,A4R,A3S,A4S)/VFM270-375]
21	62469-27001	+	DECAL,CAUTION	ﾃﾞｶﾙ	1	[AR4][AR5][4AP][5AP][ARD] [ARE][A3R][A4R][A3S][A4S]

FIG.176 LAMP BKT.[AP131F/HL] [AP131F/HL/(4AP,5AP,A3R,A4R,AR4,AR5)]

(A503APH0) ﾗﾝﾌﾟﾌﾞﾗｹｯﾄ

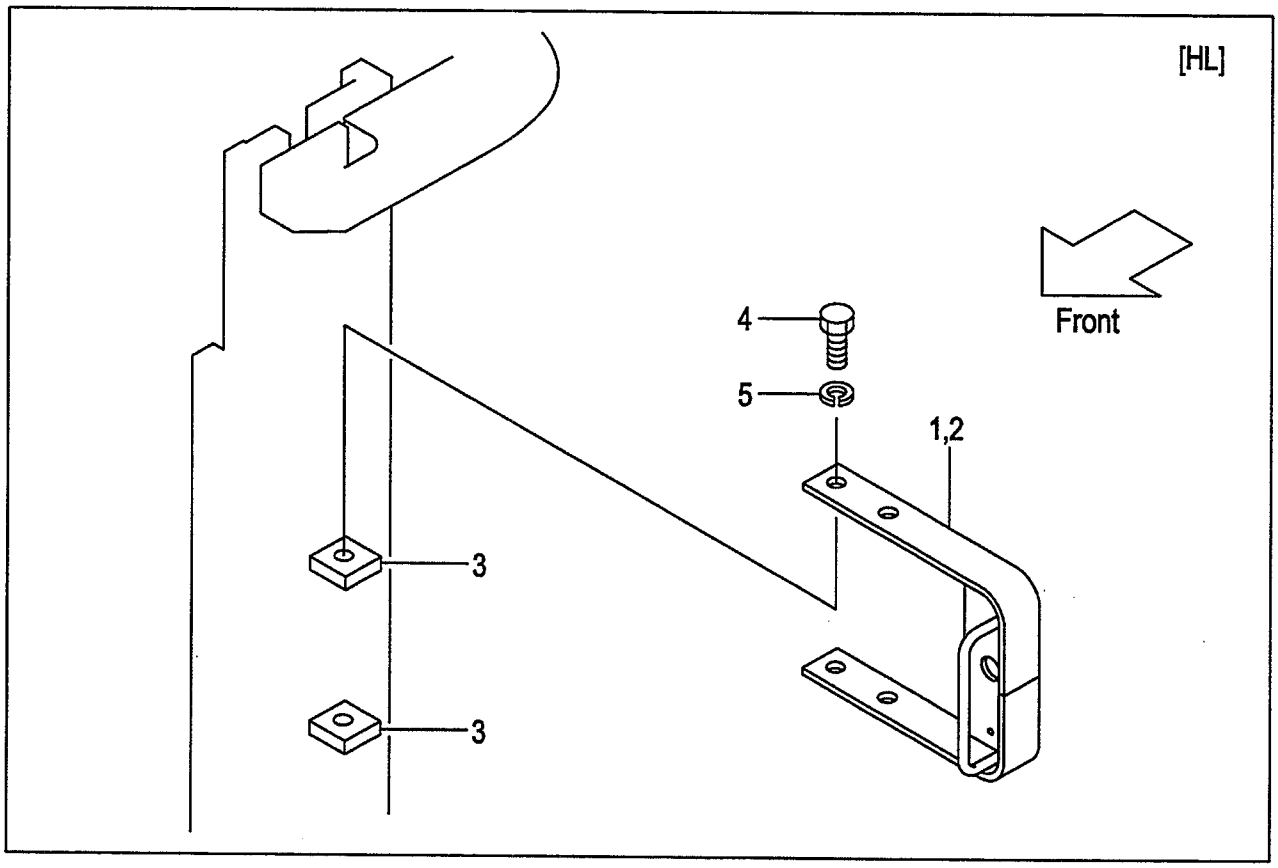

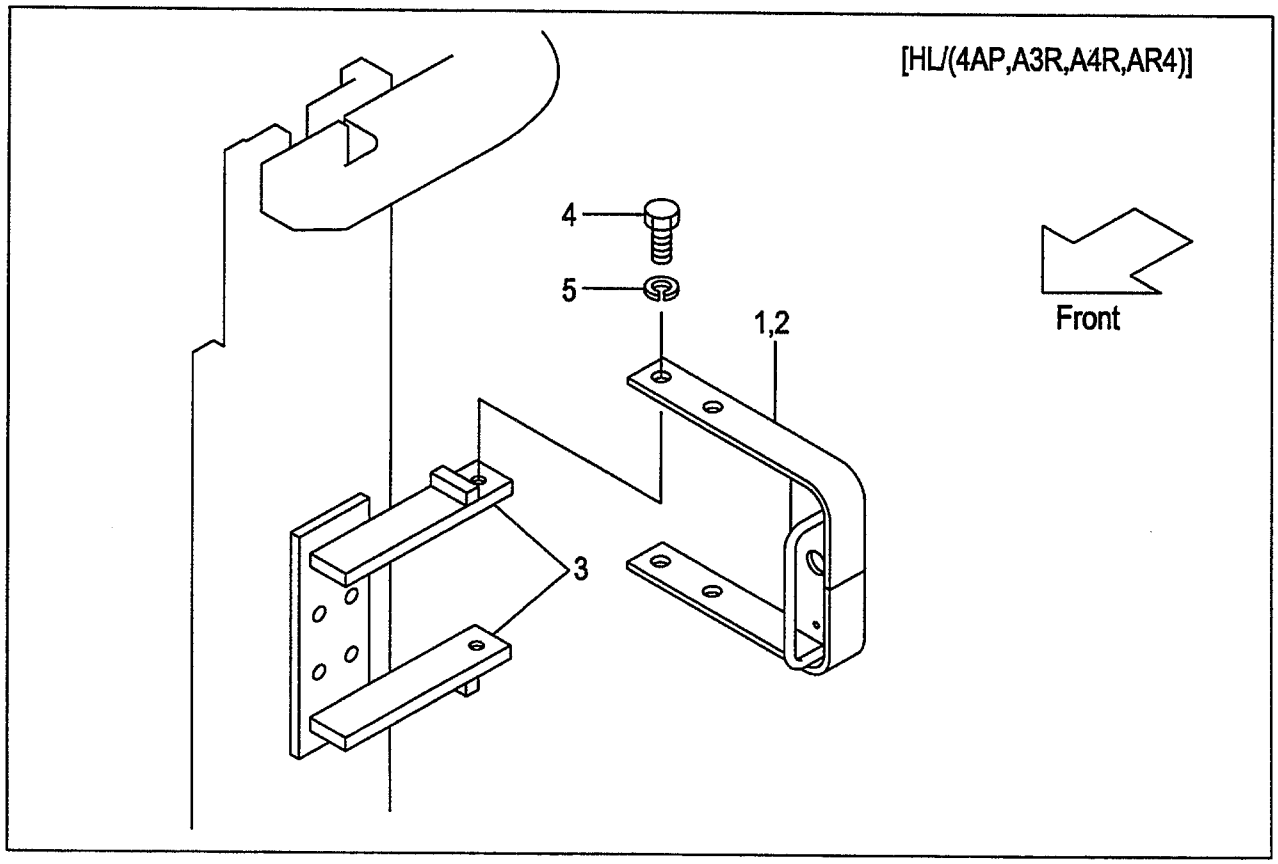

A:AP131F(VFM/J)

Item No	Part No.	Mark	Description		Req'd	Remarks : Serial No.
1	534A9-22001		BRACKET,RH	ﾌﾞﾗｹｯﾄ	1	[HL/VFM250-600]
-	534A9-22001		BRACKET,RH	ﾌﾞﾗｹｯﾄ	1	[HL/ (4AP,5AP,A3R,A4R,AR4,AR5) /VFM250-600]
2	534A9-22011		BRACKET,LH	ﾌﾞﾗｹｯﾄ	1	[HL/VFM250-600]
-	534A9-22011		BRACKET,LH	ﾌﾞﾗｹｯﾄ	1	[HL/ (4AP,5AP,A3R,A4R,AR4,AR5) /VFM250-600]
3	534A9-22101		BRACKET,HL	ﾌﾞﾗｹｯﾄ	4	[HL/VFM250-600]
-	621B0-12641		BRACKET,HL	ﾌﾞﾗｹｯﾄ	4	[HL/ (4AP,5AP,A3R,A4R,AR4,AR5) /VFM250-600]
4	01100-12020		BOLT	ﾎﾞﾙﾄ	4	[HL/VFM250-600]
-	01100-12020		BOLT	ﾎﾞﾙﾄ	4	[HL/ (4AP,5AP,A3R,A4R,AR4,AR5) /VFM250-600]
5	02010-00012		WASHER	ﾜｯｼｬ	4	[HL/VFM250-600]
-	02010-00012		WASHER	ﾜｯｼｬ	4	[HL/ (4AP,5AP,A3R,A4R,AR4,AR5) /VFM250-600]
6	534A9-22201	+	WIRE-HARNESS,HG	ﾜｲﾔﾊｰﾈｽ	2	[HL/VFM250-275]
-	534A9-22201	+	WIRE-HARNESS,HG	ﾜｲﾔﾊｰﾈｽ	2	[HL/ (4AP,5AP,A3R,A4R,AR4,AR5) /VFM250-300]
-	534A9-22211	+	WIRE-HARNESS,HG	ﾜｲﾔﾊｰﾈｽ	2	[HL/VFM300-600]
-	534A9-22211	+	WIRE-HARNESS,HG	ﾜｲﾔﾊｰﾈｽ	2	[HL/ (4AP,5AP,A3R,A4R,AR4,AR5) /VFM325-600]
7	27732-42221	+	CLAMP	ｸﾗﾝﾌﾟ	2	[HL/VFM250-600]
-	27732-42221	+	CLAMP	ｸﾗﾝﾌﾟ	2	[HL/ (4AP,5AP,A3R,A4R,AR4,AR5) /VFM250-600]
8	04913-11380	+	BAND	ﾊﾞﾝﾄﾞ	4	[HL/VFM250-600]
-	04913-11380	+	BAND	ﾊﾞﾝﾄﾞ	4	[HL/ (4AP,5AP,A3R,A4R,AR4,AR5) /VFM250-300]
-	04913-11380	+	BAND	ﾊﾞﾝﾄﾞ	6	[HL/ (4AP,5AP,A3R,A4R,AR4,AR5) /VFM325-600]
9	534A9-22301	+	PLATE	ﾌﾟﾚｰﾄ	2	[HL/VFM250-600]
-	534A9-22301	+	PLATE	ﾌﾟﾚｰﾄ	2	[HL/ (4AP,5AP,A3R,A4R,AR4,AR5) /VFM250-600]
10	216G2-40602	+	LAMP,HEAD	ﾗﾝﾌﾟ	2	[HL/VFM250-600] INC.11
-	216G2-40602	+	LAMP,HEAD	ﾗﾝﾌﾟ	2	[HL/(4AP,5AP) /VFM250-600] INC.11
-	216G2-40602	+	LAMP,HEAD	ﾗﾝﾌﾟ	2	[HL/(A3R,A4R,AR4,AR5) /VFM250-600] INC.11
11	216G2-40611	+	BULB,12V/55W	ﾊﾞﾙﾌﾞ	1	[HL/VFM250-600]

FIG.176 LAMP BKT.[AP131F/HL] [AP131F/HL/(4AP,5AP,A3R,A4R,AR4,AR5)]

(A503APH0) ﾗﾝﾌﾟﾌﾞﾗｹｯﾄ

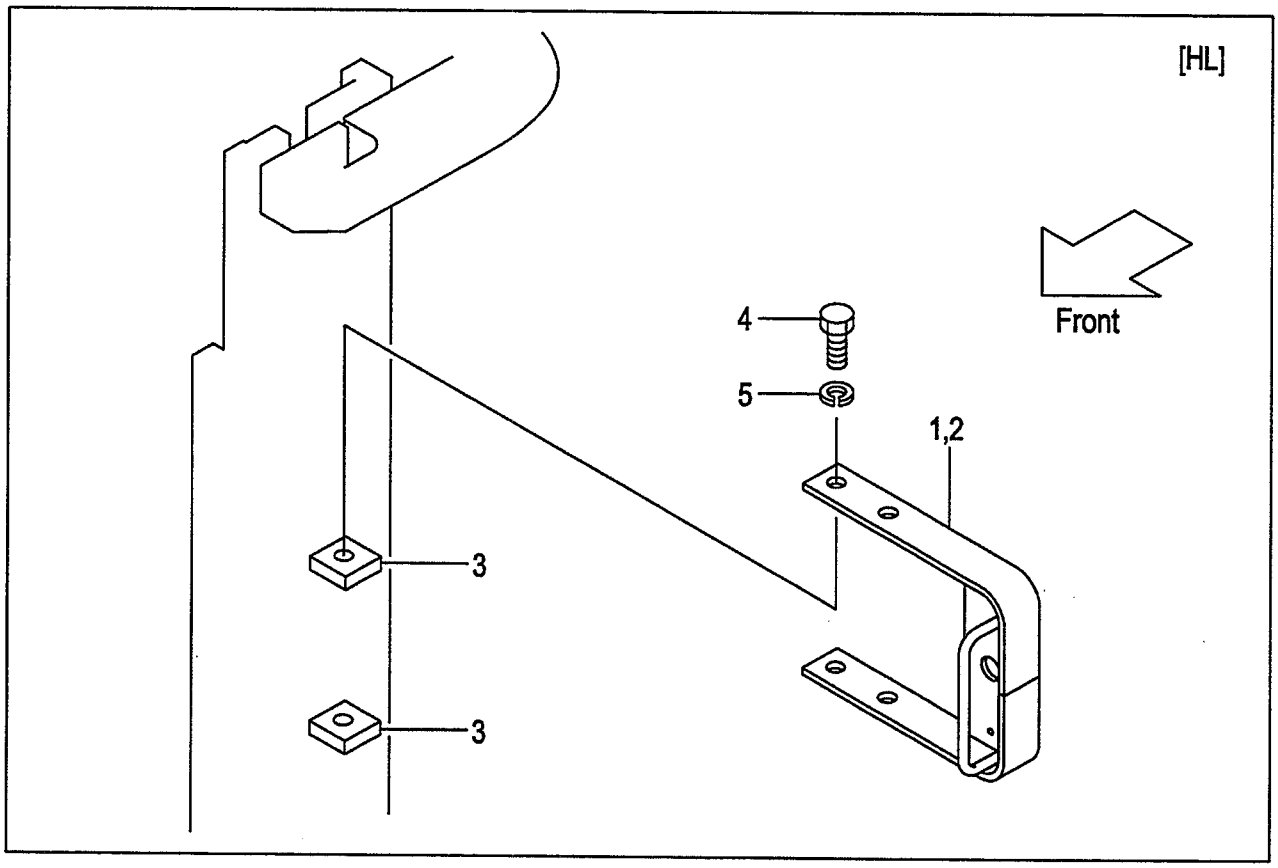

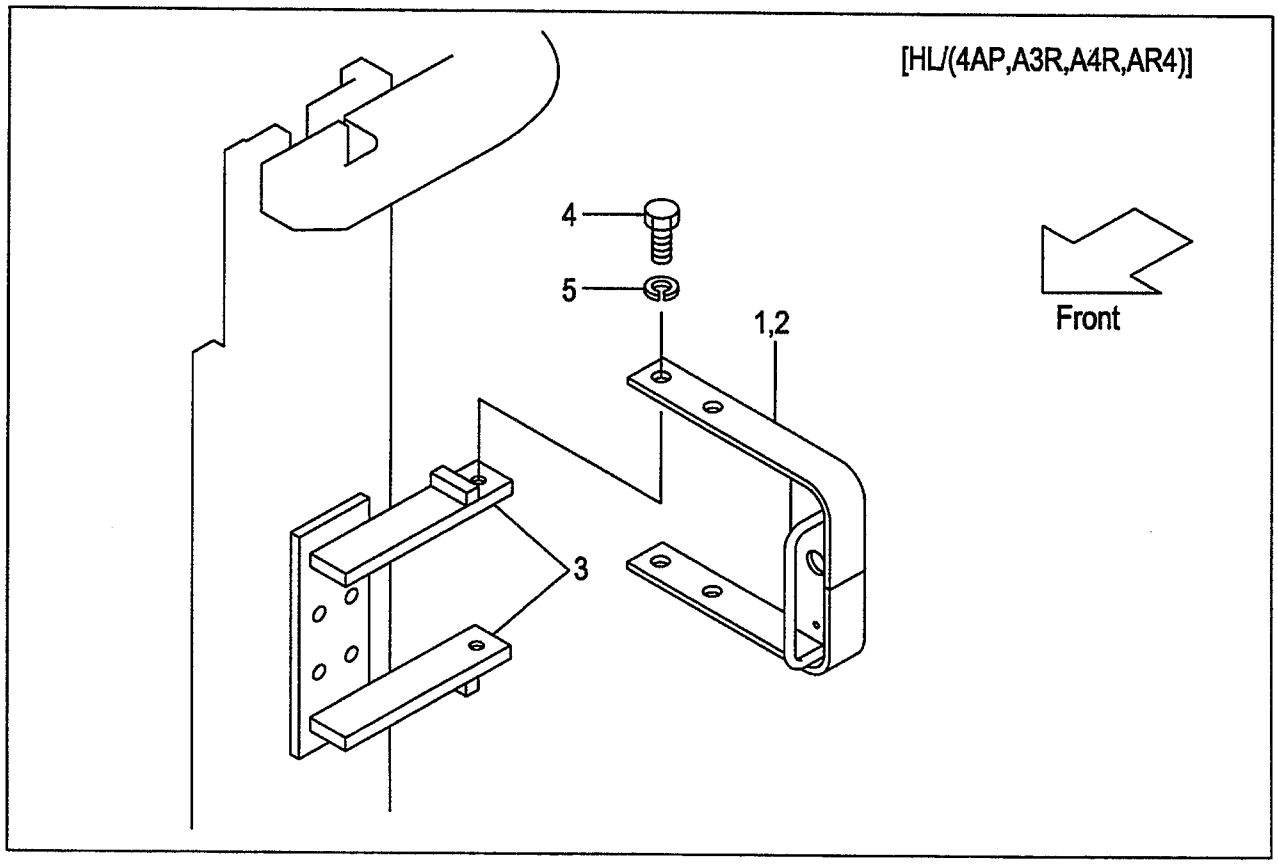

A:AP131F(VFM/J)

Item No	Part No.	Mark	Description		Req'd	Remarks : Serial No.
-	216G2-40611	+	BULB,12V/55W	ﾊﾞﾙﾌﾞ	1	[HL/ (4AP,5AP,A3R,A4R,AR4,AR5) /VFM250-600]
12	216G2-40701	+	LAMP,COMBI.,FRONT	ﾗﾝﾌﾟ	2	[HL/VFM250-600] INC.13-15
-	216G2-40701	+	LAMP,COMBI.,FRONT	ﾗﾝﾌﾟ	2	[HL/(4AP,5AP) /VFM250-600] INC.13-15
-	216G2-40701	+	LAMP,COMBI.,FRONT	ﾗﾝﾌﾟ	2	[HL/(A3R,A4R,AR4,AR5) /VFM250-600] INC.13-15
13	216G2-40711	+	BULB,TURN-SIGNAL	ﾊﾞﾙﾌﾞ	1	[HL/VFM250-600]
-	216G2-40711	+	BULB,TURN-SIGNAL	ﾊﾞﾙﾌﾞ	1	[HL/ (4AP,5AP,A3R,A4R,AR4,AR5) /VFM250-600]
14	216G2-40721	+	BULB,12V/10W	ﾊﾞﾙﾌﾞ	1	[HL/VFM250-600]
-	216G2-40721	+	BULB,12V/10W	ﾊﾞﾙﾌﾞ	1	[HL/ (4AP,5AP,A3R,A4R,AR4,AR5) /VFM250-600]
15	216G2-40731	+	LENS	ﾚﾝｽﾞ	1	[HL/VFM250-600]
-	216G2-40731	+	LENS	ﾚﾝｽﾞ	1	[HL/ (4AP,5AP,A3R,A4R,AR4,AR5) /VFM250-600]
16	01183-08016	+	BOLT & WASHER	ﾎﾞﾙﾄ&ﾜｯｼｬ	4	[HL/VFM250-600]
-	01183-08016	+	BOLT & WASHER	ﾎﾞﾙﾄ&ﾜｯｼｬ	4	[HL/ (4AP,5AP,A3R,A4R,AR4,AR5) /VFM250-600]
17	62469-27001	+	DECAL,CAUTION	ﾃﾞｶﾙ	1	[HL/ (4AP,5AP,A3R,A4R,AR4,AR5)]

LAMP BKT.[AP131F/BKH]

FIG.177 [AP131F/BKH/(4AP,5AP,A3R,A4R,AR4,AR5)]

(A503APJ0) ﾗﾝﾌﾟﾌﾞﾗｹｯﾄ

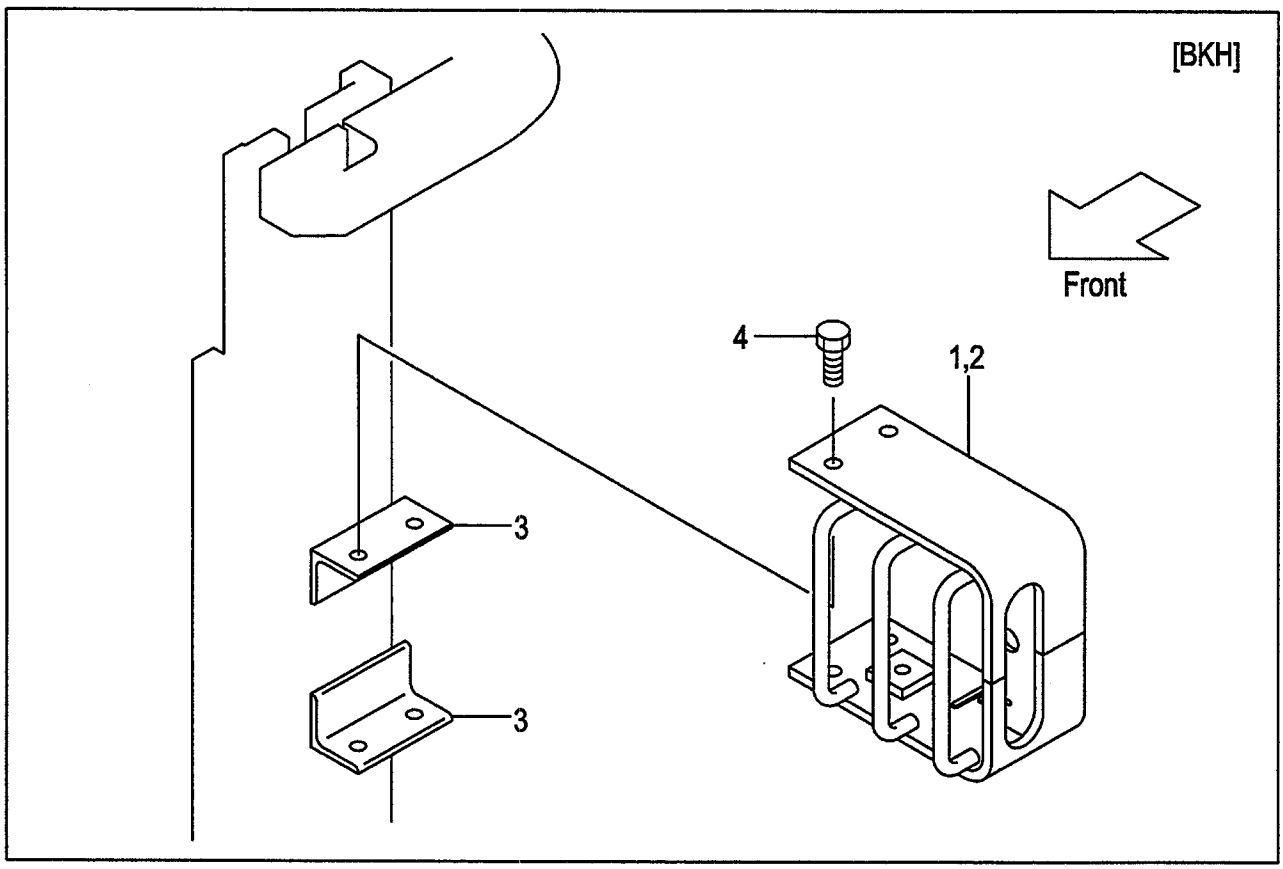

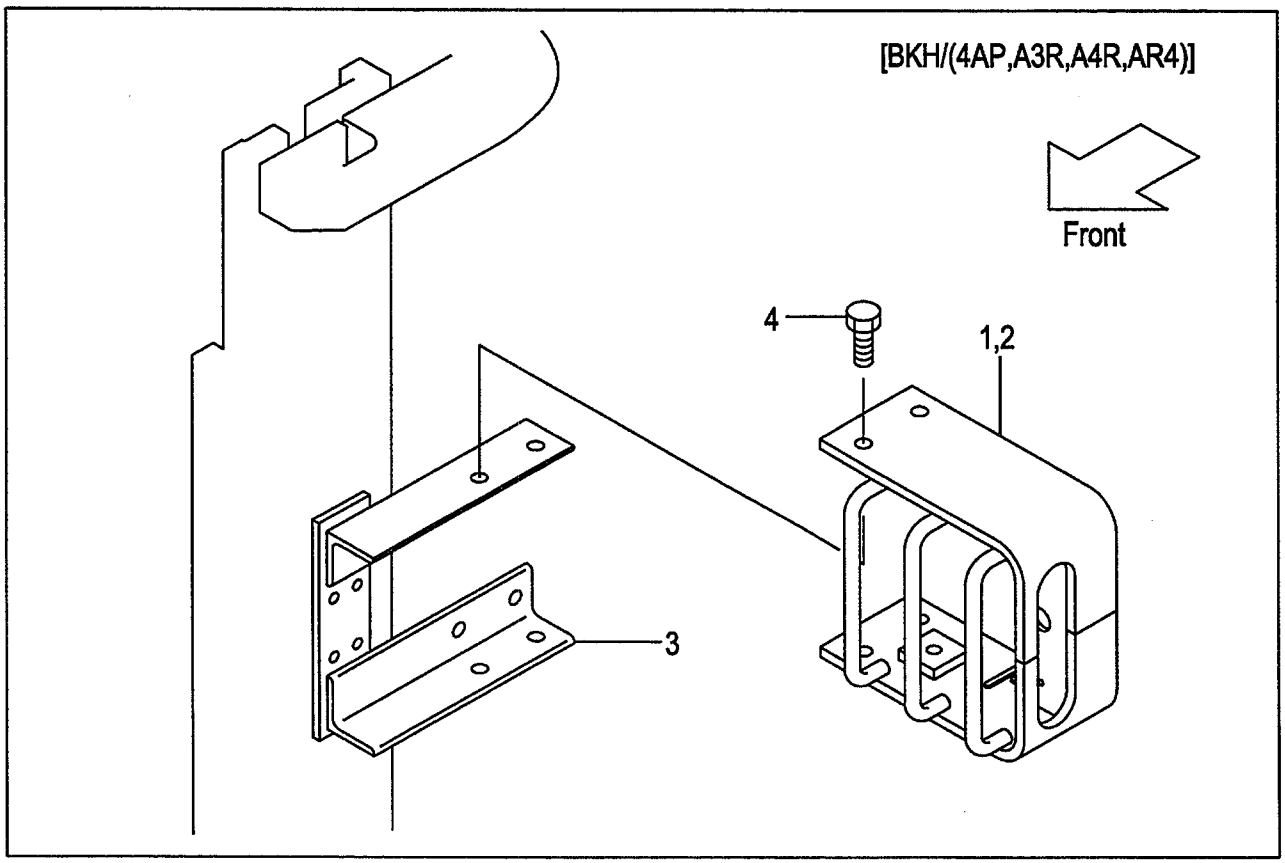

A:AP131F(VFM/J)

Item No	Part No.	Mark	Description		Req'd	Remarks : Serial No.
1	534A4-22001		GUARD,RH	ｶﾞｰﾄﾞ	1	[BKH/VFM250-600]
-	534A4-22001		GUARD,RH	ｶﾞｰﾄﾞ	1	[BKH/ (4AP,5AP,A3R,A4R,AR4,AR5) /VFM250-600]
2	534A4-22011		GUARD,LH	ｶﾞｰﾄﾞ	1	[BKH/VFM250-600]
-	534A4-22011		GUARD,LH	ｶﾞｰﾄﾞ	1	[BKH/ (4AP,5AP,A3R,A4R,AR4,AR5) /VFM250-600]
3	534A4-22101		BRACKET,BKH	ﾌﾞﾗｹｯﾄ	4	[BKH/VFM250-600]
-	621B0-12651		BRACKET,BKH	ﾌﾞﾗｹｯﾄ	4	[BKH/ (4AP,5AP,A3R,A4R,AR4,AR5) /VFM250-600]
4	01184-12020		BOLT	ﾎﾞﾙﾄ	8	[BKH/VFM250-600]
-	01184-12020		BOLT	ﾎﾞﾙﾄ	8	[BKH/ (4AP,5AP,A3R,A4R,AR4,AR5) /VFM250-600]
5	534A9-22201	+	WIRE-HARNESS,HG	ﾜｲﾔﾊｰﾈｽ	2	[BKH/VFM250-275]
-	534A9-22201	+	WIRE-HARNESS,HG	ﾜｲﾔﾊｰﾈｽ	2	[BKH/ (4AP,5AP,A3R,A4R,AR4,AR5) /VFM250-300]
-	534A9-22211	+	WIRE-HARNESS,HG	ﾜｲﾔﾊｰﾈｽ	2	[BKH/VFM300-600]
-	534A9-22211	+	WIRE-HARNESS,HG	ﾜｲﾔﾊｰﾈｽ	2	[BKH/ (4AP,5AP,A3R,A4R,AR4,AR5) /VFM325-600]
6	27732-42221	+	CLAMP	ｸﾗﾝﾌﾟ	2	[BKH/VFM250-600]
-	27732-42221	+	CLAMP	ｸﾗﾝﾌﾟ	2	[BKH/ (4AP,5AP,A3R,A4R,AR4,AR5) /VFM250-600]
7	04913-11380	+	BAND	ﾊﾞﾝﾄﾞ	4	[BKH/VFM250-600]
-	04913-11380	+	BAND	ﾊﾞﾝﾄﾞ	4	[BKH/ (4AP,5AP,A3R,A4R,AR4,AR5) /VFM250-300]
-	04913-11380	+	BAND	ﾊﾞﾝﾄﾞ	6	[BKH/ (4AP,5AP,A3R,A4R,AR4,AR5) /VFM325-600]
8	534A9-22301	+	PLATE	ﾌﾟﾚｰﾄ	2	[BKH/VFM250-600]
-	534A9-22301	+	PLATE	ﾌﾟﾚｰﾄ	2	[BKH/ (4AP,5AP,A3R,A4R,AR4,AR5) /VFM250-600]
9	216G2-40602	+	LAMP,HEAD	ﾗﾝﾌﾟ	2	[BKH/VFM250-600] INC.10
-	216G2-40602	+	LAMP,HEAD	ﾗﾝﾌﾟ	2	[BKH/(4AP,5AP) /VFM250-600] INC.10
-	216G2-40602	+	LAMP,HEAD	ﾗﾝﾌﾟ	2	[BKH/(A3R,A4R,AR4,AR5) /VFM250-600] INC.10
10	216G2-40611	+	BULB,12V/55W	ﾊﾞﾙﾌﾞ	1	[BKH/VFM250-600]
-	216G2-40611	+	BULB,12V/55W	ﾊﾞﾙﾌﾞ	1	[BKH/ (4AP,5AP,A3R,A4R,AR4,AR5) /VFM250-600]
11	216G2-40701	+	LAMP,COMBI.,FRONT	ﾗﾝﾌﾟ	2	[BKH/VFM250-600] INC.12-14

LAMP BKT.[AP131F/BKH]

FIG.177 [AP131F/BKH/(4AP,5AP,A3R,A4R,AR4,AR5)]

(A503APJ0) ﾗﾝﾌﾟﾌﾞﾗｹｯﾄ

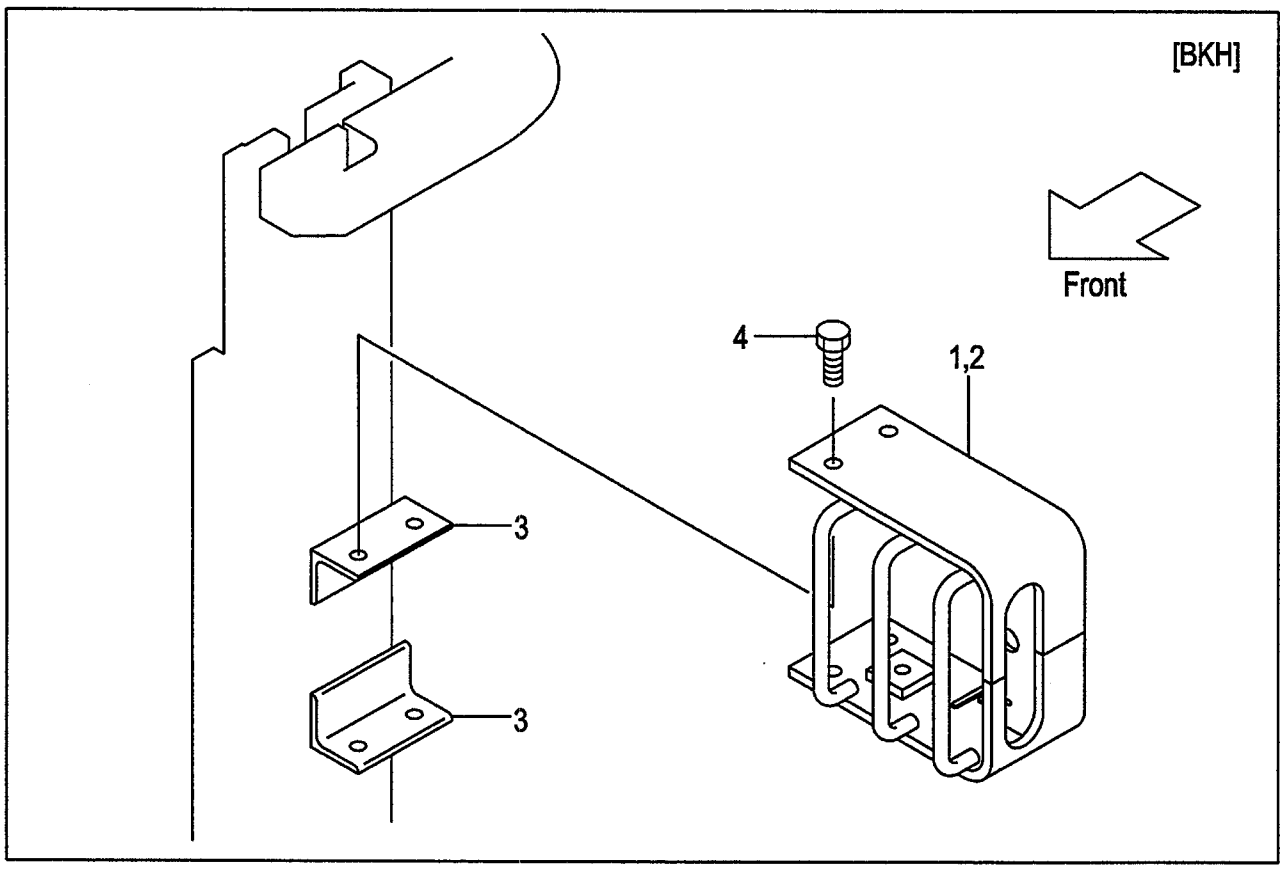

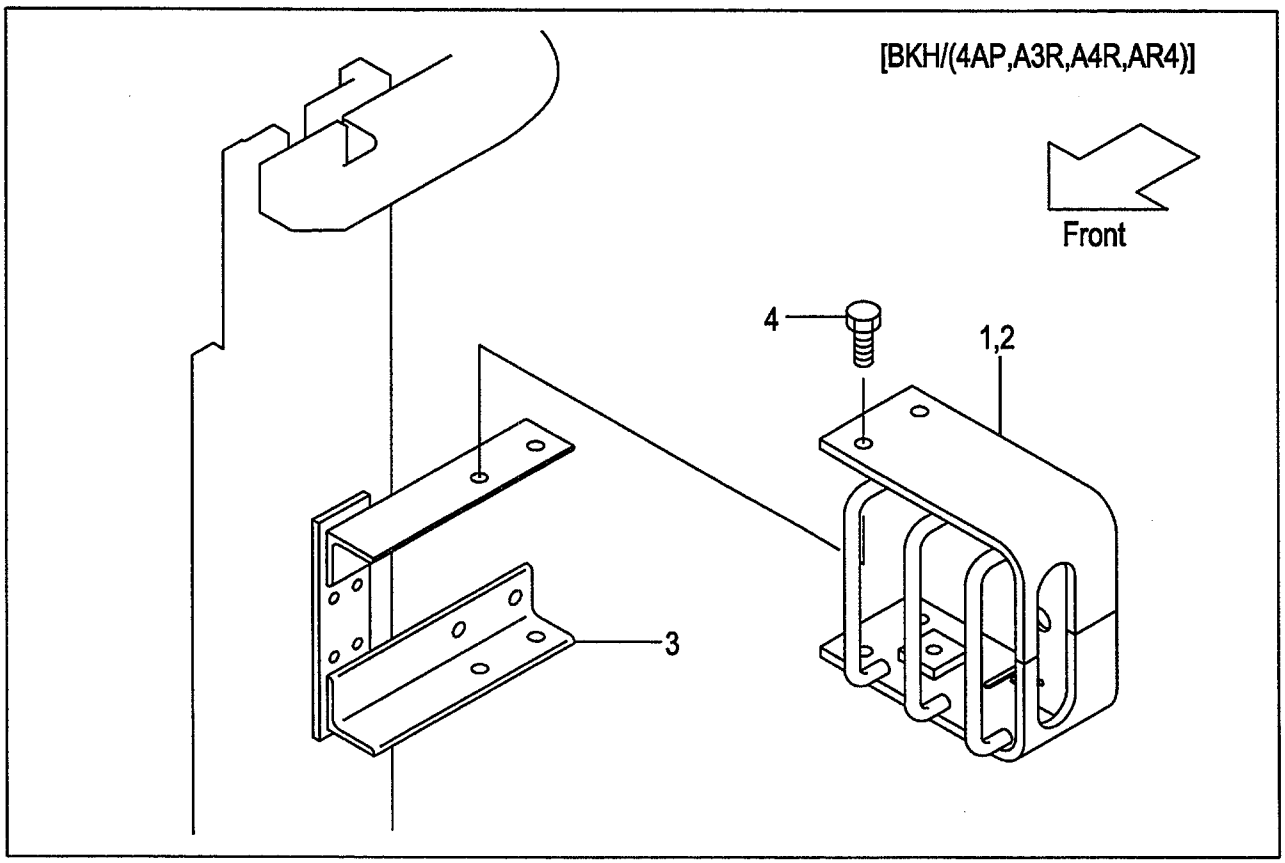

A:AP131F(VFM/J)

Item No	Part No.	Mark	Description		Req'd	Remarks : Serial No.
-	216G2-40701	+	LAMP,COMBI.,FRONT	ﾗﾝﾌﾟ	2	[BKH/(4AP,5AP) /VFM250-600] INC.12-14
-	216G2-40701	+	LAMP,COMBI.,FRONT	ﾗﾝﾌﾟ	2	[BKH/(A3R,A4R,AR4,AR5) /VFM250-600] INC.12-14
12	216G2-40711	+	BULB,TURN-SIGNAL	ﾊﾞﾙﾌﾞ	1	[BKH/VFM250-600]
-	216G2-40711	+	BULB,TURN-SIGNAL	ﾊﾞﾙﾌﾞ	1	[BKH/ (4AP,5AP,A3R,A4R,AR4,AR5) /VFM250-600]
13	216G2-40721	+	BULB,12V/10W	ﾊﾞﾙﾌﾞ	1	[BKH/VFM250-600]
-	216G2-40721	+	BULB,12V/10W	ﾊﾞﾙﾌﾞ	1	[BKH/ (4AP,5AP,A3R,A4R,AR4,AR5) /VFM250-600]
14	216G2-40731	+	LENS	ﾚﾝｽﾞ	1	[BKH/VFM250-600]
-	216G2-40731	+	LENS	ﾚﾝｽﾞ	1	[BKH/ (4AP,5AP,A3R,A4R,AR4,AR5) /VFM250-600]
15	01183-08016	+	BOLT & WASHER	ﾎﾞﾙﾄ&ﾜｯｼｬ	4	[BKH/VFM250-600]
-	01183-08016	+	BOLT & WASHER	ﾎﾞﾙﾄ&ﾜｯｼｬ	4	[BKH/ (4AP,5AP,A3R,A4R,AR4,AR5) /VFM250-600]
16	62469-27001	+	DECAL,CAUTION	ﾃﾞｶﾙ	1	[BKH/ (4AP,5AP,A3R,A4R,AR4,AR5)]

FIG.178 LAMP BKT.[AP131F/HLG] [AP131F/HLG/(4AP,5AP,A3R,A4R,AR4,AR5)]

(A503APK0) ﾗﾝﾌﾟﾌﾞﾗｹｯﾄ

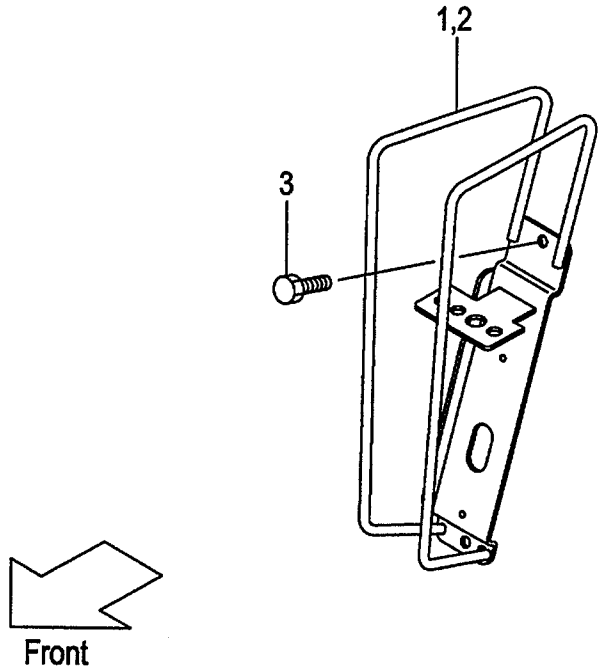

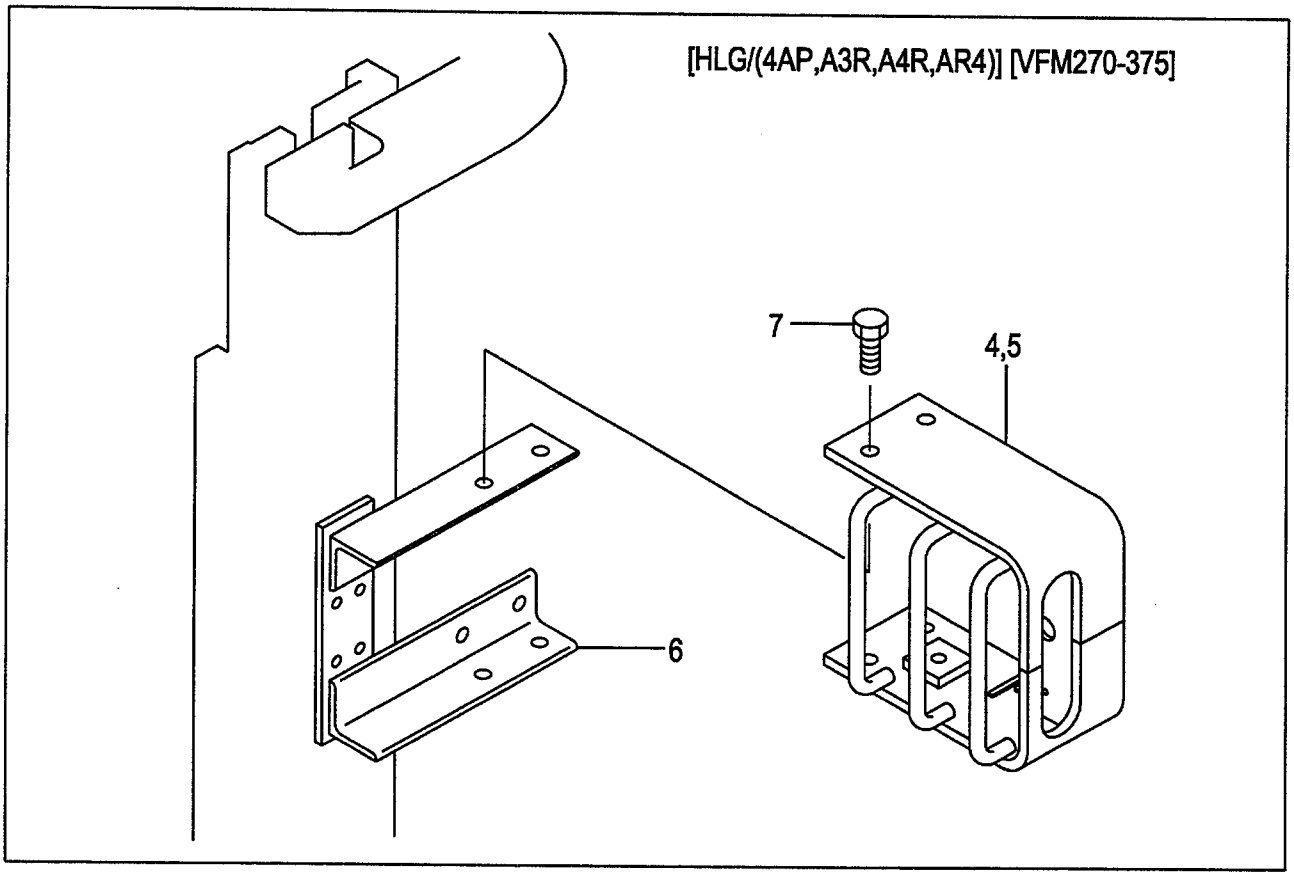

A:AP131F(VFM/J)

Item No	Part No.	Mark	Description		Req'd	Remarks : Serial No.
1	539A5-12041		GUARD,LAMP,RH	ｶﾞｰﾄﾞ	1	[HLG]
-	539A5-12041		GUARD,LAMP,RH	ｶﾞｰﾄﾞ	1	[HLG/(4AP,5AP) /(VFM200-250,400-600)]
-	539A5-12041		GUARD,LAMP,RH	ｶﾞｰﾄﾞ	1	[HLG/(A3R,A4R,AR4,AR5) /(VFM200-250,400-600)]
2	539A5-12011		GUARD,LAMP,LH	ｶﾞｰﾄﾞ	1	[HLG]
-	539A5-12011		GUARD,LAMP,LH	ｶﾞｰﾄﾞ	1	[HLG/(4AP,5AP) /(VFM200-250,400-600)]
-	539A5-12011		GUARD,LAMP,LH	ｶﾞｰﾄﾞ	1	[HLG/(A3R,A4R,AR4,AR5) /(VFM200-250,400-600)]
3	01183-08016		BOLT & WASHER	ﾎﾞﾙﾄ&ﾜｯｼｬ	4	[HLG]
-	01183-08016		BOLT & WASHER	ﾎﾞﾙﾄ&ﾜｯｼｬ	4	[HLG/(4AP,5AP) /(VFM200-250,400-600)]
-	01183-08016		BOLT & WASHER	ﾎﾞﾙﾄ&ﾜｯｼｬ	4	[HLG/(A3R,A4R,AR4,AR5) /(VFM200-250,400-600)]
4	534A4-22001		GUARD,RH	ｶﾞｰﾄﾞ	1	[HLG/ (4AP,5AP,A3R,A4R,AR4,AR5) /VFM270-375]
5	534A4-22011		GUARD,LH	ｶﾞｰﾄﾞ	1	[HLG/ (4AP,5AP,A3R,A4R,AR4,AR5) /VFM270-375]
6	621B0-12651		BRACKET,BKH	ﾌﾞﾗｹｯﾄ	4	[HLG/ (4AP,5AP,A3R,A4R,AR4,AR5) /VFM270-375]
7	01184-12020		BOLT	ﾎﾞﾙﾄ	8	[HLG/ (4AP,5AP,A3R,A4R,AR4,AR5) /VFM270-375]
8	239A2-42221	+	WIRE-HARNESS,HG	ﾜｲﾔﾊｰﾈｽ	2	[HLG]
-	239A2-42221	+	WIRE-HARNESS,HG	ﾜｲﾔﾊｰﾈｽ	2	[HLG/(4AP,5AP) /(VFM200-250,400-600)]
-	239A2-42221	+	WIRE-HARNESS,HG	ﾜｲﾔﾊｰﾈｽ	2	[HLG/(A3R,A4R,AR4,AR5) /(VFM200-250,400-600)]
-	534A9-22201	+	WIRE-HARNESS,HG	ﾜｲﾔﾊｰﾈｽ	2	[HLG/ (4AP,5AP,A3R,A4R,AR4,AR5) /VFM270-300]
-	534A9-22211	+	WIRE-HARNESS,HG	ﾜｲﾔﾊｰﾈｽ	2	[HLG/ (4AP,5AP,A3R,A4R,AR4,AR5) /VFM325-375]
9	27732-42221	+	CLAMP	ｸﾗﾝﾌﾟ	2	[HLG/ (4AP,5AP,A3R,A4R,AR4,AR5) /VFM270-375]
10	04913-11100	+	BAND	ﾊﾞﾝﾄﾞ	2	[HLG]
-	04913-11100	+	BAND	ﾊﾞﾝﾄﾞ	2	[HLG/(4AP,5AP) /(VFM200-250,400-600)]
-	04913-11100	+	BAND	ﾊﾞﾝﾄﾞ	2	[HLG/(A3R,A4R,AR4,AR5) /(VFM200-250,400-600)]
-	04913-11380	+	BAND	ﾊﾞﾝﾄﾞ	4	[HLG/ (4AP,5AP,A3R,A4R,AR4,AR5) /VFM270-375]

FIG.178 LAMP BKT.[AP131F/HLG] [AP131F/HLG/(4AP,5AP,A3R,A4R,AR4,AR5)]

(A503APK0) ﾗﾝﾌﾟﾌﾞﾗｹｯﾄ

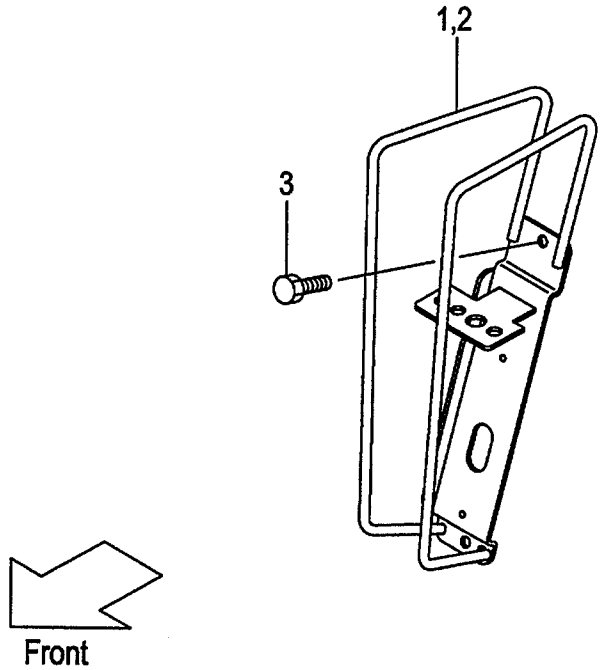

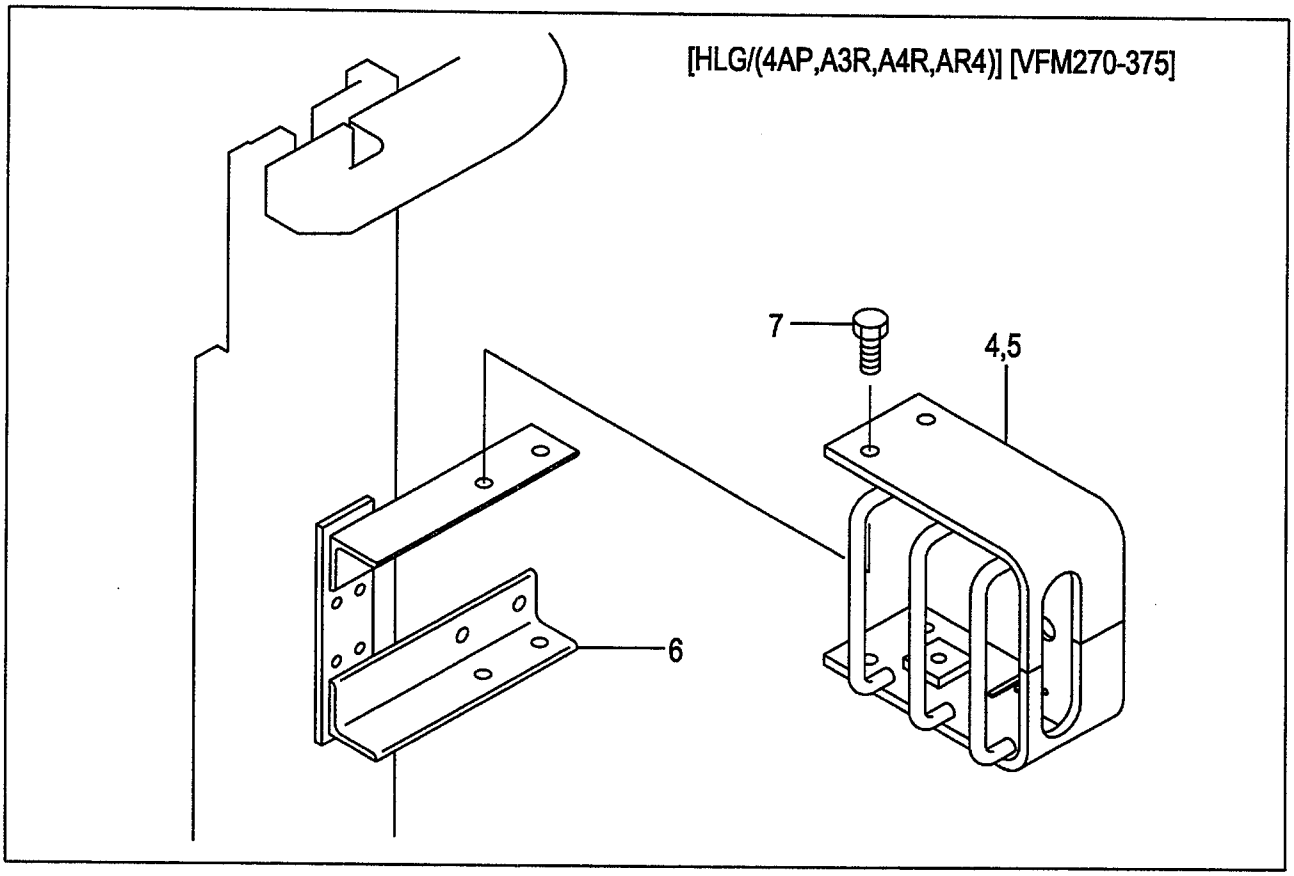

A:AP131F(VFM/J)

Item No	Part No.	Mark	Description		Req'd	Remarks : Serial No.
11	534A9-22301	+	PLATE	ﾌﾟﾚｰﾄ	2	[HLG/ (4AP,5AP,A3R,A4R,AR4,AR5) /VFM270-375]
12	216G2-40602	+	LAMP,HEAD	ﾗﾝﾌﾟ	2	[HLG] INC.13
-	216G2-40602	+	LAMP,HEAD	ﾗﾝﾌﾟ	2	[HLG/ (4AP,5AP,A3R,A4R,AR4,AR5)] INC.13
13	216G2-40611	+	BULB,12V/55W	ﾊﾞﾙﾌﾞ	1	[HLG]
-	216G2-40611	+	BULB,12V/55W	ﾊﾞﾙﾌﾞ	1	[HLG/ (4AP,5AP,A3R,A4R,AR4,AR5)]
14	216G2-40701	+	LAMP,COMBI.,FRONT	ﾗﾝﾌﾟ	2	[HLG] INC.15-17
-	216G2-40701	+	LAMP,COMBI.,FRONT	ﾗﾝﾌﾟ	2	[HLG/ (4AP,5AP,A3R,A4R,AR4,AR5)] INC.15-17
15	216G2-40711	+	BULB,TURN-SIGNAL	ﾊﾞﾙﾌﾞ	1	[HLG]
-	216G2-40711	+	BULB,TURN-SIGNAL	ﾊﾞﾙﾌﾞ	1	[HLG/ (4AP,5AP,A3R,A4R,AR4,AR5)]
16	216G2-40721	+	BULB,12V/10W	ﾊﾞﾙﾌﾞ	1	[HLG]
-	216G2-40721	+	BULB,12V/10W	ﾊﾞﾙﾌﾞ	1	[HLG/ (4AP,5AP,A3R,A4R,AR4,AR5)]
17	216G2-40731	+	LENS	ﾚﾝｽﾞ	1	[HLG]
-	216G2-40731	+	LENS	ﾚﾝｽﾞ	1	[HLG/ (4AP,5AP,A3R,A4R,AR4,AR5)]
18	01183-08016	+	BOLT & WASHER	ﾎﾞﾙﾄ&ﾜｯｼｬ	4	[HLG/ (4AP,5AP,A3R,A4R,AR4,AR5) /VFM270-375]
19	62469-27001	+	DECAL,CAUTION	ﾃﾞｶﾙ	1	[HLG/ (4AP,5AP,A3R,A4R,AR4,AR5)]

FIG.179 HYDRAULIC LINE (CONTROL VALVE-CONNECTOR)

(A503APL0) ﾊｲﾄﾞﾛﾘｯｸﾗｲﾝ (ｺﾝﾄﾛｰﾙﾊﾞﾙﾌﾞ-ｺﾈｸﾀ)

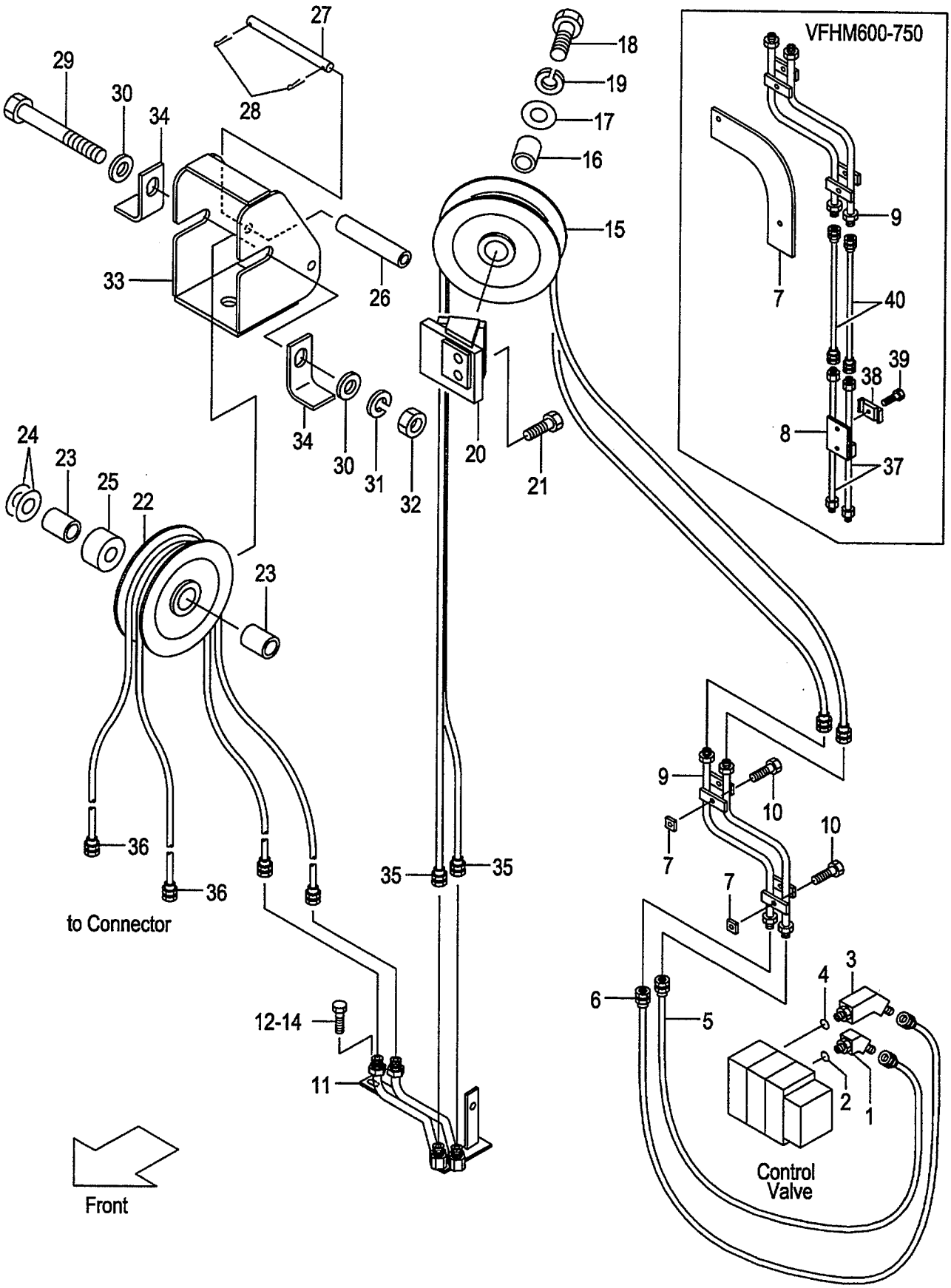

A:AP231F(VFHM/J)

Item No	Part No.	Mark	Description		Req'd	Remarks : Serial No.
A1	62160-10021		ELBOW-ASSY	ｴﾙﾎﾞｱｯｾﾝ	1	INC.1,2
1	63130-12071		ELBOW	ｴﾙﾎﾞ	1	
2	03320-00140		O-RING	Oﾘﾝｸﾞ	1	
A2	62160-10001		ELBOW-ASSY	ｴﾙﾎﾞｱｯｾﾝ	1	INC.3,4
3	62160-10011		ELBOW	ｴﾙﾎﾞ	1	
4	03320-00140		O-RING	Oﾘﾝｸﾞ	1	
5	62160-12302		HOSE	ﾎｰｽ	1	
6	62160-12312		HOSE	ﾎｰｽ	1	
7	62150-12981		BLOCK,TAPPED	ﾌﾞﾛｯｸ	2	(VFHM360-550)
-	63170-12161		BRACKET	ﾌﾞﾗｹｯﾄ	1	(VFHM600-750)
8	63680-12401		BRACKET	ﾌﾞﾗｹｯﾄ	1	(VFHM600-750)
9	62170-12311		PIPE	ﾊﾟｲﾌﾟ	1	
10	01183-08016		BOLT	ﾎﾞﾙﾄ	2	
11	63170-12002		PIPE	ﾊﾟｲﾌﾟ	1	
12	01183-08020		BOLT	ﾎﾞﾙﾄ	1	
13	01100-10016		BOLT	ﾎﾞﾙﾄ	1	
14	02010-00010		WASHER	ﾜｯｼｬ	1	
15	62170-12731		PULLEY	ﾌﾟｰﾘ	1	
16	62170-12651		COLLAR	ｶﾗｰ	1	
17	23917-42191		SHIM	ｼﾑ	2	
18	01100-16050		BOLT	ﾎﾞﾙﾄ	1	
19	02010-00016		WASHER	ﾜｯｼｬ	1	
20	63170-12101		BRACKET	ﾌﾞﾗｹｯﾄ	1	
21	01184-10030		BOLT	ﾎﾞﾙﾄ	2	
22	62170-12731		PULLEY	ﾌﾟｰﾘ	1	
23	62170-12651		COLLAR	ｶﾗｰ	2	
24	23917-42191		SHIM	ｼﾑ	2	
25	62170-12671		SPACER	ｽﾍﾟｰｻ	1	
26	62170-12711		COLLAR	ｶﾗｰ	1	
27	62170-12701		PIN	ﾋﾟﾝ	1	
28	02200-32020		PIN	ﾋﾟﾝ	2	
29	01100-16140		BOLT	ﾎﾞﾙﾄ	1	
30	02000-00016		WASHER	ﾜｯｼｬ	2	
31	02010-00016		WASHER	ﾜｯｼｬ	1	
32	01400-00016		NUT	ﾅｯﾄ	1	
33	62170-12501		BRACKET	ﾌﾞﾗｹｯﾄ	1	
34	62170-12551		STOPPER	ｽﾄｯﾊﾟ	2	
35	04601-33230		HOSE VFHM360	ﾎｰｽ	2	
-	04601-33254		HOSE VFHM400	ﾎｰｽ	2	
-	04601-33276		HOSE VFHM435	ﾎｰｽ	2	
-	04601-33306		HOSE VFHM480	ﾎｰｽ	2	
-	04601-33325		HOSE VFHM500	ﾎｰｽ	2	
-	04601-33350		HOSE VFHM540	ﾎｰｽ	2	
-	04601-33358		HOSE VFHM550	ﾎｰｽ	2	
-	04601-33266		HOSE VFHM600	ﾎｰｽ	2	
-	04601-33287		HOSE VFHM650	ﾎｰｽ	2	
-	04601-33309		HOSE VFHM700	ﾎｰｽ	2	
-	04601-33321		HOSE VFHM750	ﾎｰｽ	2	
36	04601-33190		HOSE VFHM360	ﾎｰｽ	2	
-	04601-33202		HOSE VFHM400	ﾎｰｽ	2	

FIG.179 HYDRAULIC LINE (CONTROL VALVE-CONNECTOR)

(A503APL0) ﾊｲﾄﾞﾛﾘｯｸﾗｲﾝ (ｺﾝﾄﾛｰﾙﾊﾞﾙﾌﾞ-ｺﾈｸﾀ)

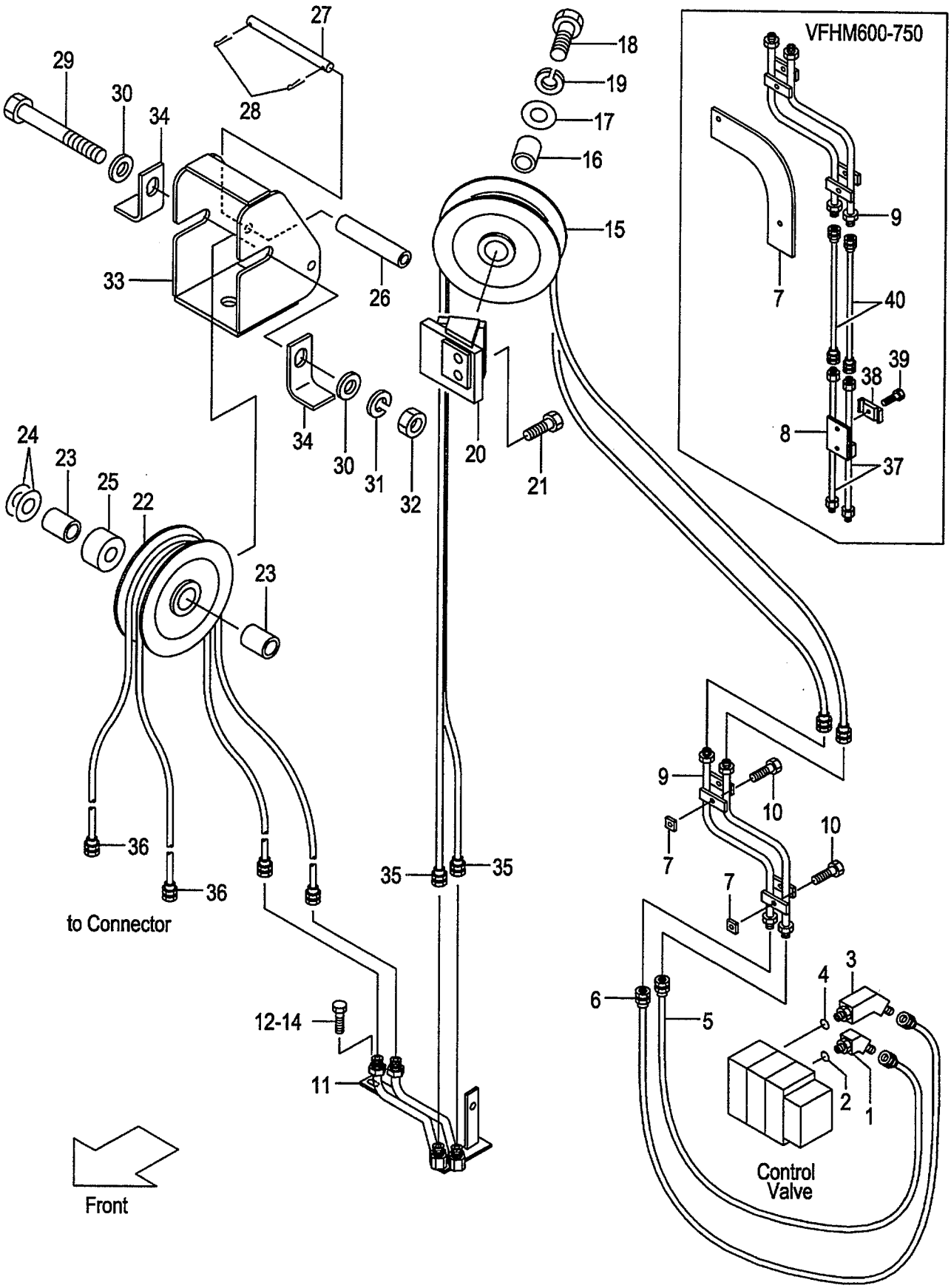

A:AP231F(VFHM/J)

Item No	Part No.	Mark	Description		Req'd	Remarks : Serial No.
-	04601-33214		HOSE VFHM435	ホース	2	
-	04601-33229		HOSE VFHM480	ホース	2	
-	04601-33239		HOSE VFHM500	ホース	2	
-	04601-33249		HOSE VFHM540	ホース	2	
-	04601-33253		HOSE VFHM550	ホース	2	
-	04601-33273		HOSE VFHM600	ホース	2	
-	04601-33294		HOSE VFHM650	ホース	2	
-	04601-33316		HOSE VFHM700	ホース	2	
-	04601-33332		HOSE VFHM750	ホース	2	
37	63160-12401		PIPE	パイプ	2	(VFHM600-750)
38	63810-12081		BAND	バンド	2	(VFHM600-750)
39	01184-10035		BOLT & WASHER	ボルト&ワッシャ	2	(VFHM600-750)
40	04601-33094		HOSE VFHM600	ホース	2	
-	04601-33316		HOSE VFHM650	ホース	2	
-	04601-33138		HOSE VFHM700	ホース	2	
-	04601-33154		HOSE VFHM750	ホース	2	
41	55787-22061	+	BLOCK,TAPPED	ブロック	1	

HYDRAULIC LINE
FIG.180 (CONT. VALVE-CONNECTOR)[AR4,4AP,ARD]
(A503APM0) ﾊｲﾄﾞﾛﾘｯｸﾗｲﾝ (ｺﾝﾄﾛｰﾙﾊﾞﾙﾌﾞ-ｺﾈｸﾀ)

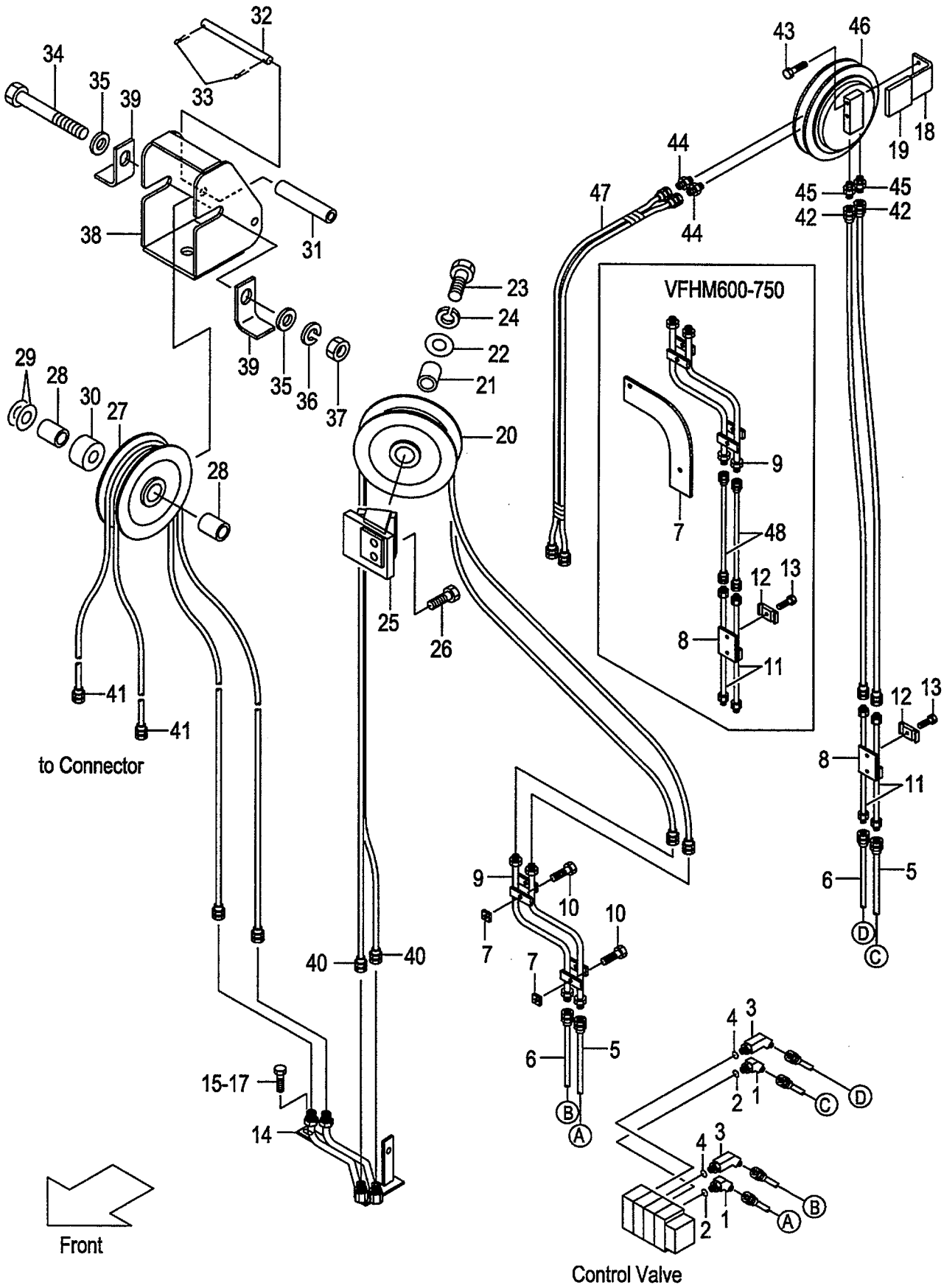

A:AP231F(VFHM/J)

Item No	Part No.	Mark	Description		Req'd	Remarks : Serial No.
A1	62160-10021		ELBOW-ASSY	ｴﾙﾎﾞｱｯｾﾝ	2	[AR4][4AP][ARD] INC.1,2
1	63130-12071		ELBOW	ｴﾙﾎﾞ	2	[AR4][4AP][ARD]
2	03320-00140		O-RING	Oﾘﾝｸﾞ	2	[AR4][4AP][ARD]
A2	62160-10001		ELBOW-ASSY	ｴﾙﾎﾞｱｯｾﾝ	2	[AR4][4AP][ARD] INC.3,4
3	62160-10011		ELBOW	ｴﾙﾎﾞ	2	[AR4][4AP][ARD]
4	03320-00140		O-RING	Oﾘﾝｸﾞ	2	[AR4][4AP][ARD]
5	62160-12302		HOSE	ﾎｰｽ	2	[AR4][4AP][ARD]
6	62160-12312		HOSE	ﾎｰｽ	2	[AR4][4AP][ARD]
7	62150-12981		BLOCK,TAPPED	ﾌﾞﾛｯｸ	2	[(AR4,4AP,ARD)/VFHM360-550]
-	63170-12161		BRACKET	ﾌﾞﾗｹｯﾄ	1	[(AR4,4AP,ARD)/VFHM600-750]
8	63680-12401		BRACKET	ﾌﾞﾗｹｯﾄ	1	[(AR4,4AP,ARD)/VFHM360-550]
-	63680-12401		BRACKET	ﾌﾞﾗｹｯﾄ	2	[(AR4,4AP,ARD)/VFHM600-750]
9	62170-12311		PIPE	ﾊﾟｲﾌﾟ	1	[AR4][4AP][ARD]
10	01183-08016		BOLT	ﾎﾞﾙﾄ	2	[AR4][4AP][ARD]
11	63160-12401		PIPE	ﾊﾟｲﾌﾟ	2	[(AR4,4AP,ARD)/VFHM360-550]
-	63160-12401		PIPE	ﾊﾟｲﾌﾟ	4	[(AR4,4AP,ARD)/VFHM600-750]
12	63810-12081		BAND	ﾊﾞﾝﾄﾞ	2	[(AR4,4AP,ARD)/VFHM360-550]
-	63810-12081		BAND	ﾊﾞﾝﾄﾞ	4	[(AR4,4AP,ARD)/VFHM600-750]
13	01184-10035		BOLT	ﾎﾞﾙﾄ	2	[(AR4,4AP,ARD)/VFHM360-550]
-	01184-10035		BOLT	ﾎﾞﾙﾄ	4	[(AR4,4AP,ARD)/VFHM600-750]
14	63170-12002		PIPE	ﾊﾟｲﾌﾟ	1	[AR4][4AP][ARD]
15	01183-08020		BOLT	ﾎﾞﾙﾄ	1	[AR4][4AP][ARD]
16	01100-10016		BOLT	ﾎﾞﾙﾄ	1	[AR4][4AP][ARD]
17	02010-10016		WASHER	ﾜｯｼｬ	1	[AR4][4AP][ARD]
18	62170-12901		BRACKET	ﾌﾞﾗｹｯﾄ	1	[AR4][4AP][ARD]
19	61163-32012		PLATE	ﾌﾟﾚｰﾄ	1	[AR4][4AP][ARD]
20	62170-12731		PULLEY	ﾌﾟｰﾘ	1	[AR4][4AP][ARD]
21	62170-12651		COLLAR	ｶﾗｰ	1	[AR4][4AP][ARD]
22	23917-42191		SHIM	ｼﾑ	2	[AR4][4AP][ARD]
23	01100-16050		BOLT	ﾎﾞﾙﾄ	1	[AR4][4AP][ARD]
24	02010-00016		WASHER	ﾜｯｼｬ	1	[AR4][4AP][ARD]
25	63170-12101		BRACKET	ﾌﾞﾗｹｯﾄ	1	[AR4][4AP][ARD]
26	01184-10030		BOLT	ﾎﾞﾙﾄ	2	[AR4][4AP][ARD]
27	62170-12731		PULLEY	ﾌﾟｰﾘ	1	[AR4][4AP][ARD]
28	62170-12651		COLLAR	ｶﾗｰ	2	[AR4][4AP][ARD]
29	23917-42191		SHIM	ｼﾑ	2	[AR4][4AP][ARD]
30	62170-12671		SPACER	ｽﾍﾟｰｻ	1	[AR4][4AP][ARD]
31	62170-12711		COLLAR	ｶﾗｰ	1	[AR4][4AP][ARD]
32	62170-12701		PIN	ﾋﾟﾝ	1	[AR4][4AP][ARD]
33	02200-32020		PIN	ﾋﾟﾝ	2	[AR4][4AP][ARD]
34	01100-16140		BOLT	ﾎﾞﾙﾄ	1	[AR4][4AP][ARD]
35	02000-00016		WASHER	ﾜｯｼｬ	2	[AR4][4AP][ARD]
36	02010-00016		WASHER	ﾜｯｼｬ	1	[AR4][4AP][ARD]
37	01400-00016		NUT	ﾅｯﾄ	1	[AR4][4AP][ARD]
38	62170-12501		BRACKET	ﾌﾞﾗｹｯﾄ	1	[AR4][4AP][ARD]
39	62170-12551		STOPPER	ｽﾄｯﾊﾟ	2	[AR4][4AP][ARD]
40	04601-33230		HOSE VFHM360	ﾎｰｽ	2	[AR4][4AP][ARD]
-	04601-33254		HOSE VFHM400	ﾎｰｽ	2	[AR4][4AP][ARD]
-	04601-33276		HOSE VFHM435	ﾎｰｽ	2	[AR4][4AP][ARD]
-	04601-33306		HOSE VFHM480	ﾎｰｽ	2	[AR4][4AP][ARD]

HYDRAULIC LINE
FIG.180 (CONT. VALVE-CONNECTOR)[AR4,4AP,ARD]
(A503APM0) ﾊｲﾄﾞﾛﾘｯｸﾗｲﾝ (ｺﾝﾄﾛｰﾙﾊﾞﾙﾌﾞ-ｺﾈｸﾀ)

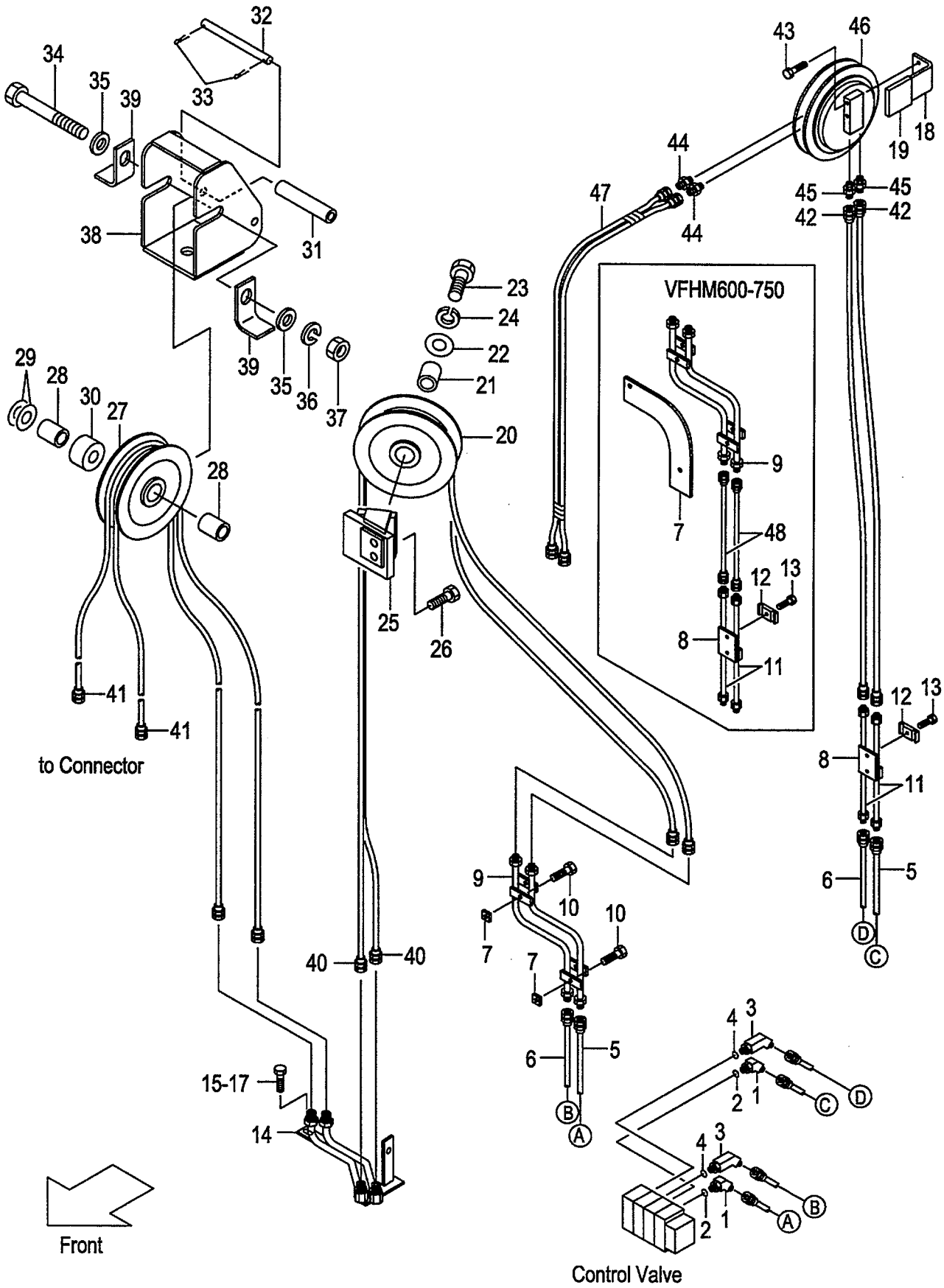

A:AP231F(VFHM/J)

Item No	Part No.	Mark	Description		Req'd	Remarks : Serial No.
-	04601-33325		HOSE VFHM500	ホース	2	[AR4][4AP][ARD]
-	04601-33350		HOSE VFHM540	ホース	2	[AR4][4AP][ARD]
-	04601-33358		HOSE VFHM550	ホース	2	[AR4][4AP][ARD]
-	04601-33266		HOSE VFHM600	ホース	2	[AR4][4AP][ARD]
-	04601-33287		HOSE VFHM650	ホース	2	[AR4][4AP][ARD]
-	04601-33309		HOSE VFHM700	ホース	2	[AR4][4AP][ARD]
-	04601-33321		HOSE VFHM750	ホース	2	[AR4][4AP][ARD]
41	04601-33190		HOSE VFHM360	ホース	2	[AR4][4AP][ARD]
-	04601-33202		HOSE VFHM400	ホース	2	[AR4][4AP][ARD]
-	04601-33214		HOSE VFHM435	ホース	2	[AR4][4AP][ARD]
-	04601-33229		HOSE VFHM480	ホース	2	[AR4][4AP][ARD]
-	04601-33239		HOSE VFHM500	ホース	2	[AR4][4AP][ARD]
-	04601-33249		HOSE VFHM540	ホース	2	[AR4][4AP][ARD]
-	04601-33253		HOSE VFHM550	ホース	2	[AR4][4AP][ARD]
-	04601-33273		HOSE VFHM600	ホース	2	[AR4][4AP][ARD]
-	04601-33294		HOSE VFHM650	ホース	2	[AR4][4AP][ARD]
-	04601-33316		HOSE VFHM700	ホース	2	[AR4][4AP][ARD]
-	04601-33332		HOSE VFHM750	ホース	2	[AR4][4AP][ARD]
42	63130-21071		HOSE VFHM360	ホース	2	[AR4][4AP][ARD]
-	63130-21084		HOSE VFHM400	ホース	2	[AR4][4AP][ARD]
-	63130-21096		HOSE VFHM435	ホース	2	[AR4][4AP][ARD]
-	63130-21111		HOSE VFHM480	ホース	2	[AR4][4AP][ARD]
-	63130-21121		HOSE VFHM500	ホース	2	[AR4][4AP][ARD]
-	63130-21134		HOSE VFHM540	ホース	2	[AR4][4AP][ARD]
-	63130-21138		HOSE VFHM550	ホース	2	[AR4][4AP][ARD]
-	63130-21156		HOSE VFHM600	ホース	2	[AR4][4AP][ARD]
-	63130-21178		HOSE VFHM650	ホース	2	[AR4][4AP][ARD]
-	63130-21200		HOSE VFHM700	ホース	2	[AR4][4AP][ARD]
-	63130-21216		HOSE VFHM750	ホース	2	[AR4][4AP][ARD]
43	01184-12065		BOLT	ボルト	2	[AR4][4AP][ARD]
44	97050-01971		FITTING	フィッティング	2	[AR4][4AP][ARD]
45	97060-45111		FITTING	フィッティング	2	[AR4][4AP][ARD]
46	61170-23001		REEL,HOSE	リール	1	[(AR4,4AP,ARD)/VFHM360-550]
-	61170-23021		REEL,HOSE	リール	1	[(AR4,4AP,ARD)/VFHM600-750]
47	63130-12621		HOSE	ホース	1	[(AR4,4AP,ARD)/VFHM360-400]
-	63130-12601		HOSE	ホース	1	[(AR4,4AP,ARD)/VFHM435-550]
-	63130-12612		HOSE	ホース	1	[(AR4,4AP,ARD)/VFHM600-750]
48	04601-33094		HOSE VFHM600	ホース	1	[AR4][4AP][ARD]
-	04601-33316		HOSE VFHM650	ホース	1	[AR4][4AP][ARD]
-	04601-33138		HOSE VFHM700	ホース	1	[AR4][4AP][ARD]
-	04601-33154		HOSE VFHM750	ホース	1	[AR4][4AP][ARD]
49	55787-22061	+	PLATE	プレート	1	[AR4][4AP][ARD]
50	62469-27001	+	DECAL,CAUTION	デカル	1	[ARD]
K1	BS-51502-08610		KIT,SEAL,REEL	リールシールキット	2	[AR4][4AP][ARD]

HYDRAULIC LINE
FIG.181 (CONT. VALVE-CONNECTOR)[AR5,5AP,ARE]
(A503APN0) ﾊｲﾄﾞﾛﾘｯｸﾗｲﾝ (ｺﾝﾄﾛｰﾙﾊﾞﾙﾌﾞ-ｺﾈｸﾀ)

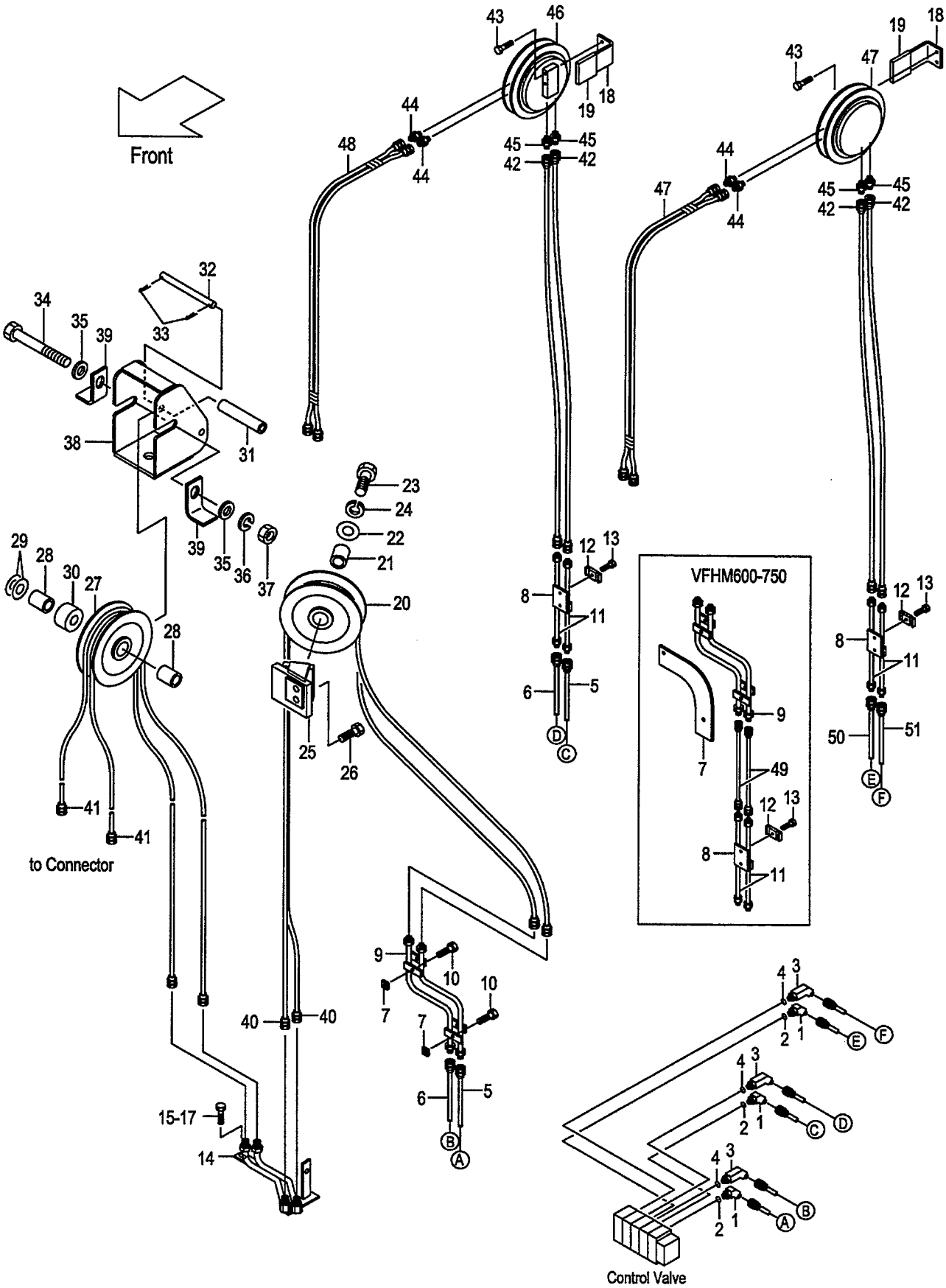

A:AP231F(VFHM/J)

Item No	Part No.	Mark	Description		Req'd	Remarks : Serial No.
A1	62160-10021		ELBOW-ASSY	ｴﾙﾎﾞｱｯｾﾝ	2	[AR5][5AP][ARE] INC.1,2
1	63130-12071		ELBOW	ｴﾙﾎﾞ	2	[AR5][5AP][ARE]
2	03320-00140		O-RING	Oﾘﾝｸﾞ	2	[AR5][5AP][ARE]
A2	62160-10001		ELBOW-ASSY	ｴﾙﾎﾞｱｯｾﾝ	2	[AR5][5AP][ARE] INC.3,4
3	62160-10011		ELBOW	ｴﾙﾎﾞ	2	[AR5][5AP][ARE]
4	03320-00140		O-RING	Oﾘﾝｸﾞ	2	[AR5][5AP][ARE]
5	62160-12302		HOSE	ﾎｰｽ	2	[AR5][5AP][ARE]
6	62160-12312		HOSE	ﾎｰｽ	2	[AR5][5AP][ARE]
7	62150-12981		BLOCK,TAPPED	ﾌﾞﾛｯｸ	2	[(AR5,5AP,ARE)/VFHM360-550]
-	63170-12161		BRACKET	ﾌﾞﾗｹｯﾄ	1	[(AR5,5AP,ARE)/VFHM600-750]
8	63680-12401		BRACKET	ﾌﾞﾗｹｯﾄ	2	[(AR5,5AP,ARE)/VFHM360-550]
-	63680-12401		BRACKET	ﾌﾞﾗｹｯﾄ	3	[(AR5,5AP,ARE)/VFHM600-750]
9	62170-12311		PIPE	ﾊﾟｲﾌﾟ	1	[AR5][5AP][ARE]
10	01183-08016		BOLT	ﾎﾞﾙﾄ	2	[AR5][5AP][ARE]
11	63160-12401		PIPE	ﾊﾟｲﾌﾟ	4	[(AR5,5AP,ARE)/VFHM360-550]
-	63160-12401		PIPE	ﾊﾟｲﾌﾟ	6	[(AR5,5AP,ARE)/VFHM600-750]
12	63810-12081		BAND	ﾊﾞﾝﾄﾞ	4	[(AR5,5AP,ARE)/VFHM360-550]
-	63810-12081		BAND	ﾊﾞﾝﾄﾞ	6	[(AR5,5AP,ARE)/VFHM600-750]
13	01184-10035		BOLT	ﾎﾞﾙﾄ	4	[(AR5,5AP,ARE)/VFHM360-550]
-	01184-10035		BOLT	ﾎﾞﾙﾄ	6	[(AR5,5AP,ARE)/VFHM600-750]
14	63170-12002		PIPE	ﾊﾟｲﾌﾟ	1	[AR5][5AP][ARE]
15	01183-08020		BOLT	ﾎﾞﾙﾄ	1	[AR5][5AP][ARE]
16	01100-10016		BOLT	ﾎﾞﾙﾄ	1	[AR5][5AP][ARE]
17	02010-10016		WASHER	ﾜｯｼｬ	1	[AR5][5AP][ARE]
18	62170-12901		BRACKET	ﾌﾞﾗｹｯﾄ	2	[AR5][5AP][ARE]
19	61163-32012		PLATE	ﾌﾟﾚｰﾄ	2	[AR5][5AP][ARE]
20	62170-12731		PULLEY	ﾌﾟｰﾘ	1	[AR5][5AP][ARE]
21	62170-12651		COLLAR	ｶﾗｰ	1	[AR5][5AP][ARE]
22	23917-42191		SHIM	ｼﾑ	2	[AR5][5AP][ARE]
23	01100-16050		BOLT	ﾎﾞﾙﾄ	1	[AR5][5AP][ARE]
24	02010-00016		WASHER	ﾜｯｼｬ	1	[AR5][5AP][ARE]
25	63170-12101		BRACKET	ﾌﾞﾗｹｯﾄ	1	[AR5][5AP][ARE]
26	01184-10030		BOLT	ﾎﾞﾙﾄ	2	[AR5][5AP][ARE]
27	62170-12731		PULLEY	ﾌﾟｰﾘ	1	[AR5][5AP][ARE]
28	62170-12651		COLLAR	ｶﾗｰ	2	[AR5][5AP][ARE]
29	23917-42191		SHIM	ｼﾑ	2	[AR5][5AP][ARE]
30	62170-12671		SPACER	ｽﾍﾟｰｻ	1	[AR5][5AP][ARE]
31	62170-12711		COLLAR	ｶﾗｰ	1	[AR5][5AP][ARE]
32	62170-12701		PIN	ﾋﾟﾝ	1	[AR5][5AP][ARE]
33	02200-32020		PIN	ﾋﾟﾝ	2	[AR5][5AP][ARE]
34	01100-16140		BOLT	ﾎﾞﾙﾄ	1	[AR5][5AP][ARE]
35	02000-00016		WASHER	ﾜｯｼｬ	2	[AR5][5AP][ARE]
36	02010-00016		WASHER	ﾜｯｼｬ	1	[AR5][5AP][ARE]
37	01400-00016		NUT	ﾅｯﾄ	1	[AR5][5AP][ARE]
38	62170-12501		BRACKET	ﾌﾞﾗｹｯﾄ	1	[AR5][5AP][ARE]
39	62170-12551		STOPPER	ｽﾄｯﾊﾟ	2	[AR5][5AP][ARE]
40	04601-33230		HOSE VFHM360	ﾎｰｽ	2	[AR5][5AP][ARE]
-	04601-33254		HOSE VFHM400	ﾎｰｽ	2	[AR5][5AP][ARE]
-	04601-33276		HOSE VFHM435	ﾎｰｽ	2	[AR5][5AP][ARE]
-	04601-33306		HOSE VFHM480	ﾎｰｽ	2	[AR5][5AP][ARE]

HYDRAULIC LINE
FIG.181 (CONT. VALVE-CONNECTOR)[AR5,5AP,ARE]
(A503APN0) ﾊｲﾄﾞﾛﾘｯｸﾗｲﾝ (ｺﾝﾄﾛｰﾙﾊﾞﾙﾌﾞ-ｺﾈｸﾀ)

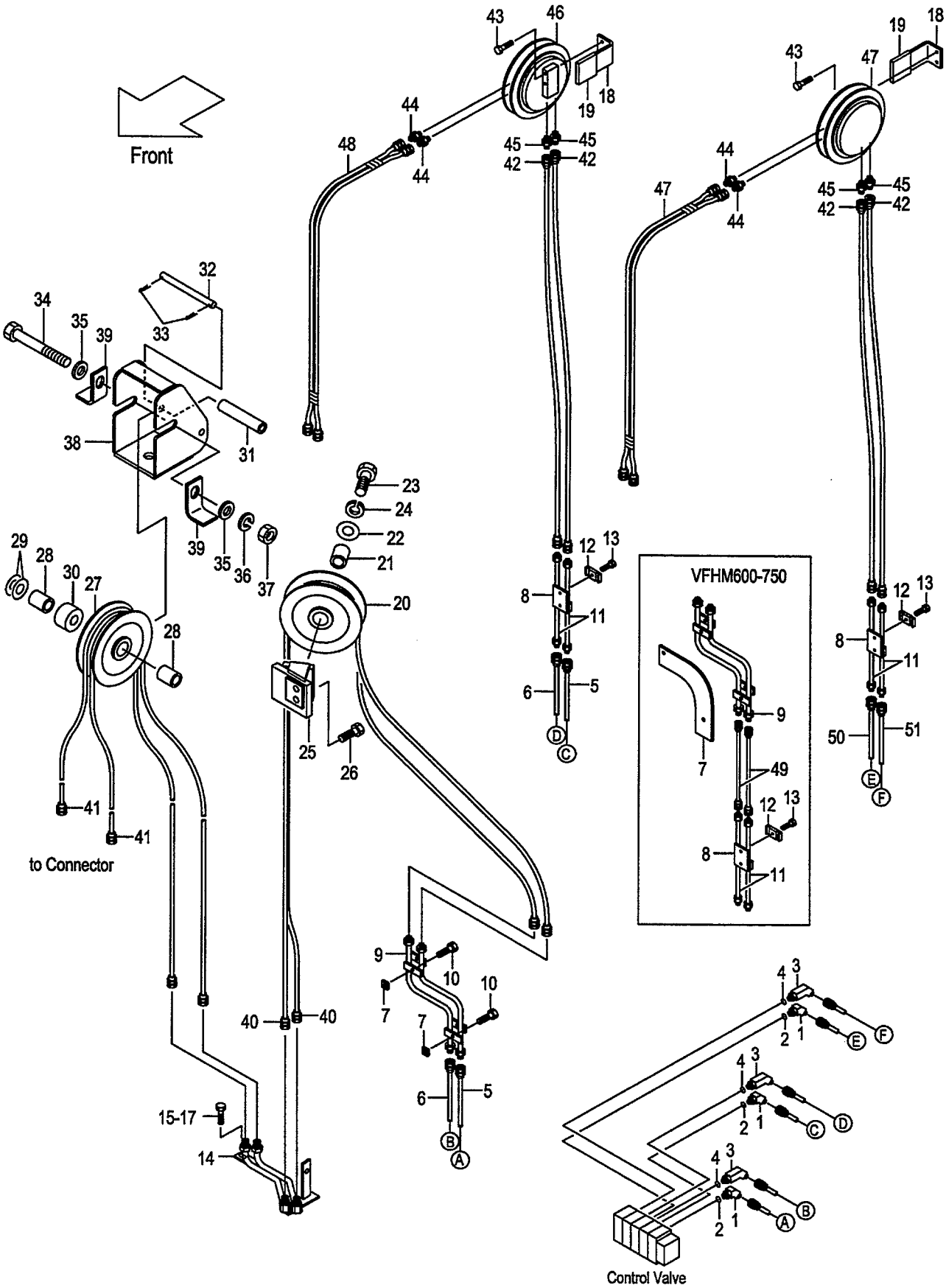

A:AP231F(VFHM/J)

Item No	Part No.	Mark	Description		Req'd	Remarks : Serial No.
-	04601-33325		HOSE VFHM500	ホース	2	[AR5][5AP][ARE]
-	04601-33350		HOSE VFHM540	ホース	2	[AR5][5AP][ARE]
-	04601-33358		HOSE VFHM550	ホース	2	[AR5][5AP][ARE]
-	04601-33266		HOSE VFHM600	ホース	2	[AR5][5AP][ARE]
-	04601-33287		HOSE VFHM650	ホース	2	[AR5][5AP][ARE]
-	04601-33309		HOSE VFHM700	ホース	2	[AR5][5AP][ARE]
-	04601-33321		HOSE VFHM750	ホース	2	[AR5][5AP][ARE]
41	04601-33190		HOSE VFHM360	ホース	2	[AR5][5AP][ARE]
-	04601-33202		HOSE VFHM400	ホース	2	[AR5][5AP][ARE]
-	04601-33214		HOSE VFHM435	ホース	2	[AR5][5AP][ARE]
-	04601-33229		HOSE VFHM480	ホース	2	[AR5][5AP][ARE]
-	04601-33239		HOSE VFHM500	ホース	2	[AR5][5AP][ARE]
-	04601-33249		HOSE VFHM540	ホース	2	[AR5][5AP][ARE]
-	04601-33253		HOSE VFHM550	ホース	2	[AR5][5AP][ARE]
-	04601-33273		HOSE VFHM600	ホース	2	[AR5][5AP][ARE]
-	04601-33294		HOSE VFHM650	ホース	2	[AR5][5AP][ARE]
-	04601-33316		HOSE VFHM700	ホース	2	[AR5][5AP][ARE]
-	04601-33332		HOSE VFHM750	ホース	2	[AR5][5AP][ARE]
42	63130-21071		HOSE VFHM360	ホース	4	[AR5][5AP][ARE]
-	63130-21084		HOSE VFHM400	ホース	4	[AR5][5AP][ARE]
-	63130-21096		HOSE VFHM435	ホース	4	[AR5][5AP][ARE]
-	63130-21111		HOSE VFHM480	ホース	4	[AR5][5AP][ARE]
-	63130-21121		HOSE VFHM500	ホース	4	[AR5][5AP][ARE]
-	63130-21134		HOSE VFHM540	ホース	4	[AR5][5AP][ARE]
-	63130-21138		HOSE VFHM550	ホース	4	[AR5][5AP][ARE]
-	63130-21156		HOSE VFHM600	ホース	4	[AR5][5AP][ARE]
-	63130-21178		HOSE VFHM650	ホース	4	[AR5][5AP][ARE]
-	63130-21200		HOSE VFHM700	ホース	4	[AR5][5AP][ARE]
-	63130-21216		HOSE VFHM750	ホース	4	[AR5][5AP][ARE]
43	01184-12065		BOLT	ボルト	4	[AR5][5AP][ARE]
44	97050-01971		FITTING	フィッティング	4	[AR5][5AP][ARE]
45	97060-45111		FITTING	フィッティング	4	[AR5][5AP][ARE]
46	61170-23001		REEL,HOSE,RH	リール	1	[(AR5,5AP,ARE)/VFHM360-550]
-	61170-23021		REEL,HOSE,RH	リール	1	[(AR5,5AP,ARE)/VFHM600-750]
47	61170-23011		REEL,HOSE,LH	リール	1	[(AR5,5AP,ARE)/VFHM360-550]
-	61170-23031		REEL,HOSE,LH	リール	1	[(AR5,5AP,ARE)/VFHM600-750]
48	63130-12621		HOSE	ホース	2	[(AR5,5AP,ARE)/VFHM360-400]
-	63130-12601		HOSE	ホース	2	[(AR5,5AP,ARE)/VFHM435-550]
-	63130-12612		HOSE	ホース	2	[(AR5,5AP,ARE)/VFHM600-750]
49	04601-33094		HOSE VFHM600	ホース	1	[AR5][5AP][ARE]
-	04601-33116		HOSE VFHM650	ホース	1	[AR5][5AP][ARE]
-	04601-33138		HOSE VFHM700	ホース	1	[AR5][5AP][ARE]
-	04601-33154		HOSE VFHM750	ホース	1	[AR5][5AP][ARE]
50	62150-12522		HOSE	ホース	1	[AR5][5AP][ARE]
51	62150-12532		HOSE	ホース	1	[AR5][5AP][ARE]
52	55787-22061	+	PLATE	プレート	1	[AR5][5AP][ARE]
53	62469-27001	+	DECAL,CAUTION	デカル	1	[ARE]
K1	BS-51502-08610		KIT,SEAL,REEL	リールシールキット	2	[AR5][5AP][ARE]

FIG.182 HYDRAULIC LINE (CONTROL VALVE-CONNECTOR)[A3R,A3S]

(A503APP0) ﾊｲﾄﾞﾛﾘｯｸﾗｲﾝ (ｺﾝﾄﾛｰﾙﾊﾞﾙﾌﾞ-ｺﾈｸﾀ)

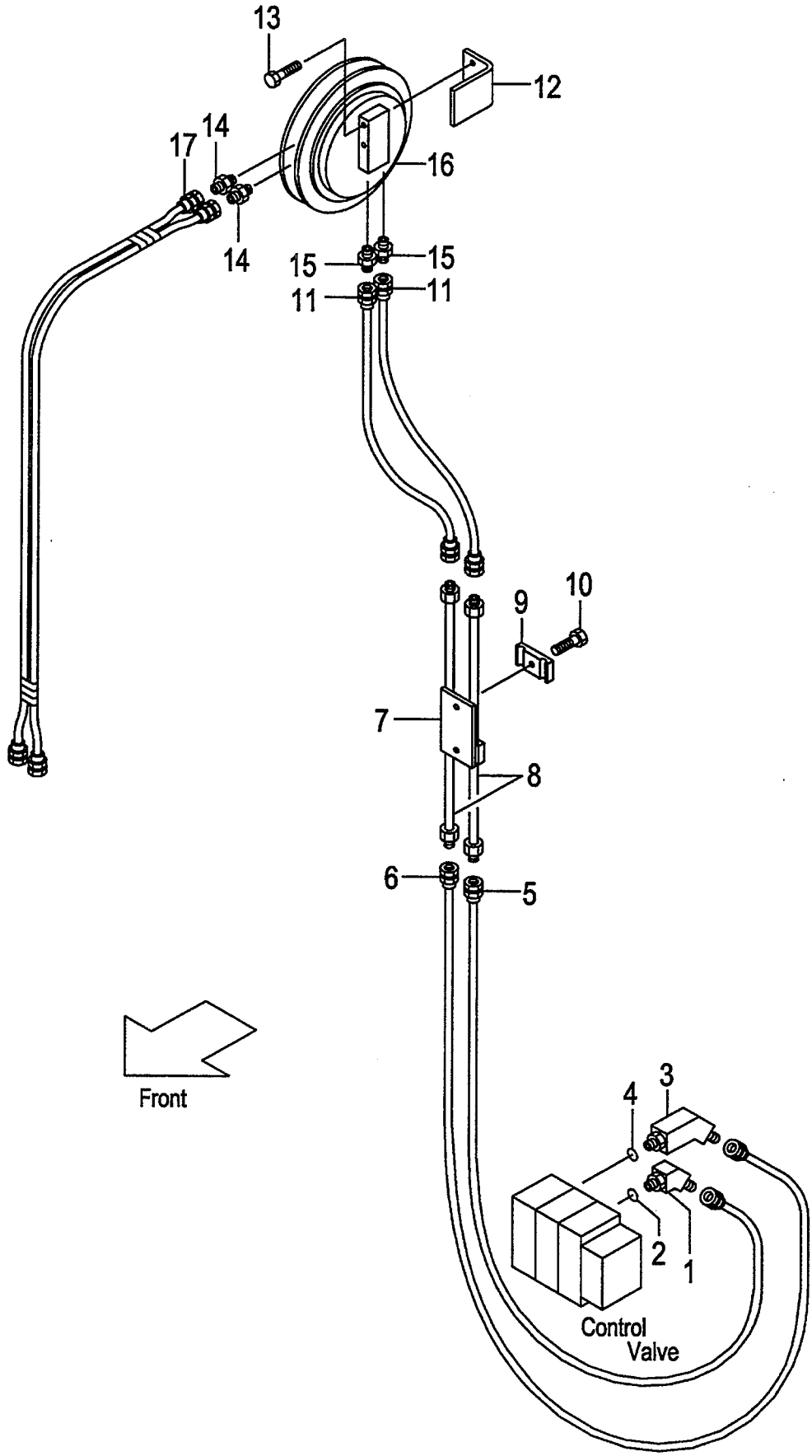

A:AP231F(VFHM/J)

Item No	Part No.	Mark	Description		Req'd	Remarks : Serial No.
A1	62160-10021		ELBOW-ASSY	ｴﾙﾎﾞｱｯｾﾝ	1	[A3R][A3S] INC.1,2
1	63130-12071		ELBOW	ｴﾙﾎﾞ	1	[A3R][A3S]
2	03320-00140		O-RING	Oﾘﾝｸﾞ	1	[A3R][A3S]
A2	62160-10001		ELBOW-ASSY	ｴﾙﾎﾞｱｯｾﾝ	1	[A3R][A3S] INC.3,4
3	62160-10011		ELBOW	ｴﾙﾎﾞ	1	[A3R][A3S]
4	03320-00140		O-RING	Oﾘﾝｸﾞ	1	[A3R][A3S]
5	62160-12302		HOSE	ﾎｰｽ	1	[A3R][A3S]
6	62160-12312		HOSE	ﾎｰｽ	1	[A3R][A3S]
7	63680-12401		BRACKET	ﾌﾞﾗｹｯﾄ	1	[A3R][A3S]
8	63160-12401		PIPE	ﾊﾟｲﾌﾟ	2	[A3R][A3S]
9	63810-12081		BAND	ﾊﾞﾝﾄﾞ	2	[A3R][A3S]
10	01184-10035		BOLT	ﾎﾞﾙﾄ	2	[A3R][A3S]
11	63130-21076		HOSE VFHM360	ﾎｰｽ	2	[A3R][A3S]
-	63130-21089		HOSE VFHM400	ﾎｰｽ	2	[A3R][A3S]
-	63130-21101		HOSE VFHM435	ﾎｰｽ	2	[A3R][A3S]
-	63130-21116		HOSE VFHM480	ﾎｰｽ	2	[A3R][A3S]
-	63130-21126		HOSE VFHM500	ﾎｰｽ	2	[A3R][A3S]
-	63130-21139		HOSE VFHM540	ﾎｰｽ	2	[A3R][A3S]
-	63130-21143		HOSE VFHM550	ﾎｰｽ	2	[A3R][A3S]
-	63130-21161		HOSE VFHM600	ﾎｰｽ	2	[A3R][A3S]
-	63130-21183		HOSE VFHM650	ﾎｰｽ	2	[A3R][A3S]
-	63130-21205		HOSE VFHM700	ﾎｰｽ	2	[A3R][A3S]
-	63130-21221		HOSE VFHM750	ﾎｰｽ	2	[A3R][A3S]
12	62170-12901		BRACKET	ﾌﾞﾗｹｯﾄ	1	[A3R][A3S]
13	01184-12065		BOLT	ﾎﾞﾙﾄ	2	[A3R][A3S]
14	97050-01971		FITTING	ﾌｨｯﾃｨﾝｸﾞ	2	[A3R][A3S]
15	97060-45111		FITTING	ﾌｨｯﾃｨﾝｸﾞ	2	[A3R][A3S]
16	61170-23001		HOSE,REEL	ﾎｰｽ	1	[(A3R,A3S)/VFHM360-550]
-	61170-23021		HOSE,REEL	ﾎｰｽ	1	[(A3R,A3S)/VFHM600-750]
17	63130-12621		HOSE	ﾎｰｽ	1	[(A3R,A3S)/VFHM360-400]
-	63130-12601		HOSE	ﾎｰｽ	1	[(A3R,A3S)/VFHM435-550]
-	63130-12612		HOSE	ﾎｰｽ	1	[(A3R,A3S)/VFHM600-750]
18	62469-27001	+	DECAL,CAUTION	ﾃﾞｶﾙ	1	[A3S]
K1	BS-51502-08610		KIT,SEAL,REEL	ﾘｰﾙｼｰﾙｷｯﾄ	2	[A3R][A3S]

HYDRAULIC LINE
FIG.183 (CONTROL VALVE-CONNECTOR)[A4R,A4S]
(A503APQ0) ﾊｲﾄﾞﾛﾘｯｸﾗｲﾝ (ｺﾝﾄﾛｰﾙﾊﾞﾙﾌﾞ-ｺﾈｸﾀ)

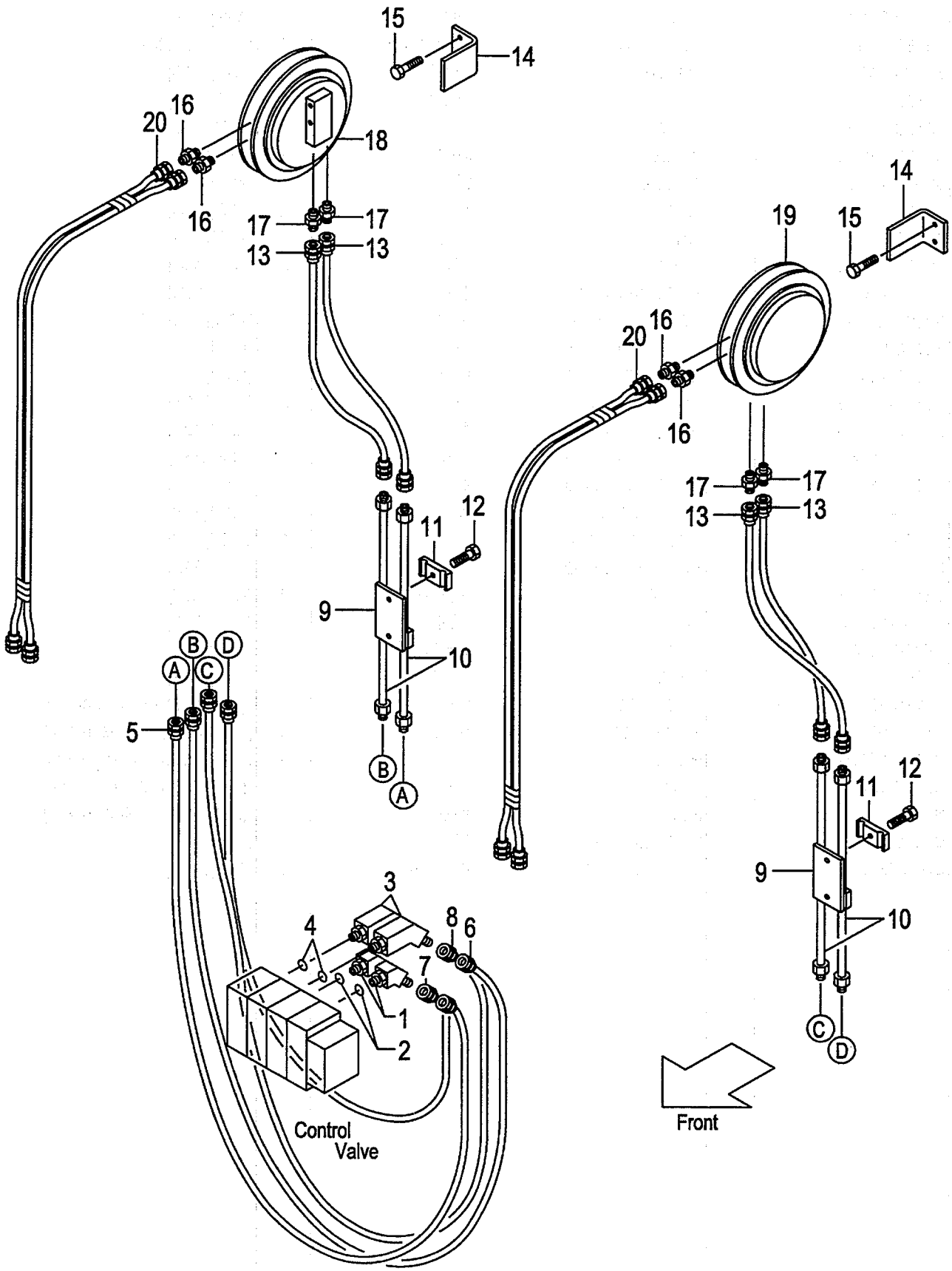

A:AP231F(VFHM/J)

Item No	Part No.	Mark	Description		Req'd	Remarks : Serial No.
A1	62160-10021		ELBOW-ASSY	ｴﾙﾎﾞｱｯｾﾝ	2	[A4R][A4S] INC.1,2
1	63130-12071		ELBOW	ｴﾙﾎﾞ	2	[A4R][A4S]
2	03320-00140		O-RING	Oﾘﾝｸﾞ	2	[A4R][A4S]
A2	62160-10001		ELBOW-ASSY	ｴﾙﾎﾞｱｯｾﾝ	2	[A4R][A4S] INC.3,4
3	62160-10011		ELBOW	ｴﾙﾎﾞ	2	[A4R][A4S]
4	03320-00140		O-RING	Oﾘﾝｸﾞ	2	[A4R][A4S]
5	62160-12302		HOSE	ﾎｰｽ	2	[A4R][A4S]
6	62160-12312		HOSE	ﾎｰｽ	2	[A4R][A4S]
7	62150-12522		HOSE	ﾎｰｽ	2	[A4R][A4S]
8	62150-12532		HOSE	ﾎｰｽ	2	[A4R][A4S]
9	63680-12401		BRACKET	ﾌﾞﾗｹｯﾄ	2	[A4R][A4S]
10	63160-12401		PIPE	ﾊﾟｲﾌﾟ	4	[A4R][A4S]
11	63810-12081		BAND	ﾊﾞﾝﾄﾞ	4	[A4R][A4S]
12	01184-10035		BOLT	ﾎﾞﾙﾄ	4	[A4R][A4S]
13	63130-21076		HOSE VFHM360	ﾎｰｽ	4	[A4R][A4S]
-	63130-21089		HOSE VFHM400	ﾎｰｽ	4	[A4R][A4S]
-	63130-21101		HOSE VFHM435	ﾎｰｽ	4	[A4R][A4S]
-	63130-21116		HOSE VFHM480	ﾎｰｽ	4	[A4R][A4S]
-	63130-21126		HOSE VFHM500	ﾎｰｽ	4	[A4R][A4S]
-	63130-21139		HOSE VFHM540	ﾎｰｽ	4	[A4R][A4S]
-	63130-21143		HOSE VFHM550	ﾎｰｽ	4	[A4R][A4S]
-	63130-21161		HOSE VFHM600	ﾎｰｽ	4	[A4R][A4S]
-	63130-21183		HOSE VFHM650	ﾎｰｽ	4	[A4R][A4S]
-	63130-21205		HOSE VFHM700	ﾎｰｽ	4	[A4R][A4S]
-	63130-21221		HOSE VFHM750	ﾎｰｽ	4	[A4R][A4S]
14	62170-12901		BRACKET	ﾌﾞﾗｹｯﾄ	2	[A4R][A4S]
15	01184-12065		BOLT	ﾎﾞﾙﾄ	4	[A4R][A4S]
16	97050-01971		FITTING	ﾌｨｯﾃｨﾝｸﾞ	4	[A4R][A4S]
17	97060-45111		FITTING	ﾌｨｯﾃｨﾝｸﾞ	4	[A4R][A4S]
18	61170-23001		HOSE,REEL,RH	ﾎｰｽ	1	[(A4R,A4S)/VFHM360-550]
-	61170-23021		HOSE,REEL,RH	ﾎｰｽ	1	[(A4R,A4S)/VFHM600-750]
19	61170-23011		HOSE,REEL,LH	ﾎｰｽ	1	[(A4R,A4S)/VFHM360-550]
-	61170-23031		HOSE,REEL,LH	ﾎｰｽ	1	[(A4R,A4S)/VFHM600-750]
20	63130-12621		HOSE	ﾎｰｽ	2	[(A4R,A4S)/VFHM360-400]
-	63130-12601		HOSE	ﾎｰｽ	2	[(A4R,A4S)/VFHM435-550]
-	63130-12612		HOSE	ﾎｰｽ	2	[(A4R,A4S)/VFHM600-750]
21	62469-27001	+	DECAL,CAUTION	ﾃﾞｶﾙ	1	[A4S]
K1	BS-51502-08610		KIT,SEAL,REEL	ﾘｰﾙｼｰﾙｷｯﾄ	2	[A4R][A4S]

FIG.184 HYDRAULIC LINE (RELIEF VALVE)[VRV]

(A503APR0) ﾊｲﾄﾞﾛﾘｯｸﾗｲﾝ (ﾘﾘｰﾌﾊﾞﾙﾌﾞ)

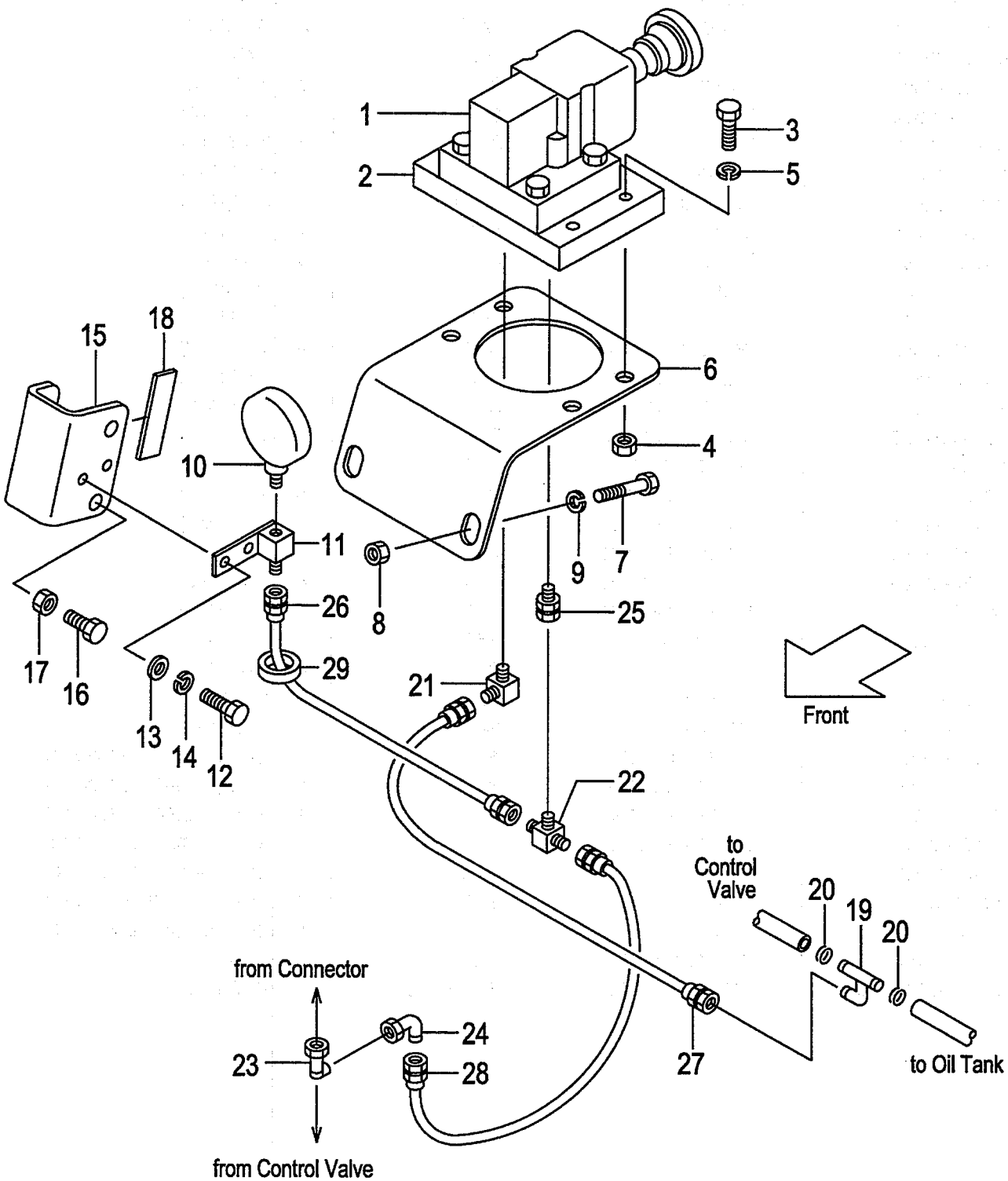

FIG.184
(A503APR0)

A:AP231F(VFHM/J)

Item No	Part No.	Mark	Description		Req'd	Remarks : Serial No.
1	63130-15771		VALVE,RELIEF	ﾊﾞﾙﾌﾞ	1	[VRV]
2	63130-15921		PLATE	ﾌﾟﾚｰﾄ	1	[VRV]
3	01181-08030		BOLT	ﾎﾞﾙﾄ	4	[VRV]
4	01400-00008		NUT	ﾅｯﾄ	4	[VRV]
5	02010-00008		WASHER	ﾜｯｼｬ	4	[VRV]
6	61170-10151		BRACKET	ﾌﾞﾗｹｯﾄ	1	[VRV]
7	01181-10025		BOLT	ﾎﾞﾙﾄ	2	[VRV]
8	01400-00010		NUT	ﾅｯﾄ	2	[VRV]
9	02010-00010		WASHER	ﾜｯｼｬ	2	[VRV]
10	63110-20221		GAUGE	ｹﾞｰｼﾞ	1	[VRV]
11	62150-14041		STUD	ｽﾀｯﾄﾞ	1	[VRV]
12	01100-08012		BOLT	ﾎﾞﾙﾄ	2	[VRV]
13	02000-00008		WASHER	ﾜｯｼｬ	2	[VRV]
14	02010-00008		WASHER	ﾜｯｼｬ	2	[VRV]
15	61170-10101		BRACKET	ﾌﾞﾗｹｯﾄ	1	[VRV]
16	01100-10016		BOLT	ﾎﾞﾙﾄ	2	[VRV]
17	01402-00010		NUT	ﾅｯﾄ	2	[VRV]
18	61170-10111		RUBBER	ﾗﾊﾞｰ	1	[VRV]
19	62150-14011		PIPE	ﾊﾟｲﾌﾟ	1	[VRV]
20	63110-20261		CLIP	ｸﾘｯﾌﾟ	2	[VRV]
21	53110-12121		ELBOW	ｴﾙﾎﾞ	1	[VRV]
22	61170-10201		THREE-WAY	ｽﾘｰｳｴｲ	1	[VRV]
23	62150-14001		THREE-WAY	ｽﾘｰｳｴｲ	1	[VRV]
24	62150-14311		ELBOW	ｴﾙﾎﾞ	1	[VRV]
25	04138-00303		UNION	ﾕﾆｵﾝ	1	[VRV]
26	63130-31055		HOSE	ﾎｰｽ	1	[VRV]
27	63130-21085		HOSE	ﾎｰｽ	1	[VRV]
28	63130-21120		HOSE	ﾎｰｽ	1	[VRV]
29	04913-11300		BAND	ﾊﾞﾝﾄﾞ	2	[VRV]
30	63130-12751	+	PLUG	ﾌﾟﾗｸﾞ	1	[VRV]

FIG.185 LAMP BRACKET [AP231F]

(A503APS0) ﾗﾝﾌﾟﾌﾞﾗｹｯﾄ

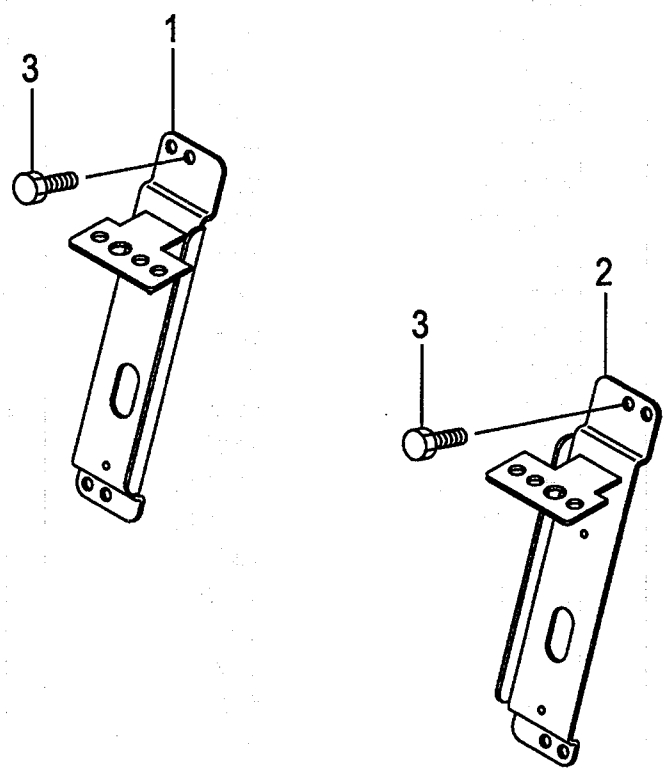

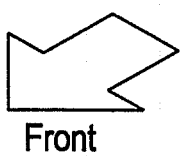

A:AP231F(VFHM/J)

Item No	Part No.	Mark	Description		Req'd	Remarks : Serial No.
1	239A5-12521		BRACKET,RH	ﾌﾞﾗｹｯﾄ	1	
2	239A5-12501		BRACKET,LH	ﾌﾞﾗｹｯﾄ	1	
3	01183-08016		BOLT	ﾎﾞﾙﾄ	4	
4	04913-11100	+	BAND	ﾊﾞﾝﾄﾞ	2	
5	239A2-42221	+	WIRE-HARNESS,HG	ﾜｲﾔﾊｰﾈｽ	2	
6	216G2-40602	+	LAMP,HEAD	ﾗﾝﾌﾟ	2	INC.7
7	216G2-40611	+	BULB,12V/55W	ﾊﾞﾙﾌﾞ	1	
8	216G2-40701	+	LAMP,COMBI.,FRONT	ﾗﾝﾌﾟ	2	INC.9-11
9	216G2-40711	+	BULB,TURN-SIGNAL	ﾊﾞﾙﾌﾞ	1	
10	216G2-40721	+	BULB,12V/10W	ﾊﾞﾙﾌﾞ	1	
11	216G2-40731	+	LENS	ﾚﾝｽﾞ	1	

FIG.186 LAMP BKT.[AP231F/(AR4,AR5,4AP,5AP,ARD, ARE,A3R,A4R,A3S,A4S)]

(A503APT0) ﾗﾝﾌﾟﾌﾞﾗｹｯﾄ

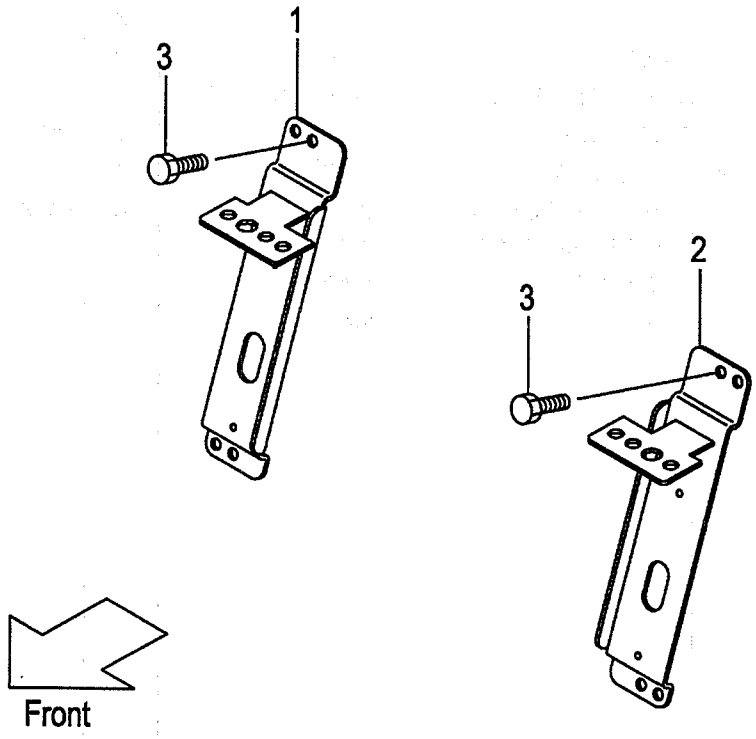

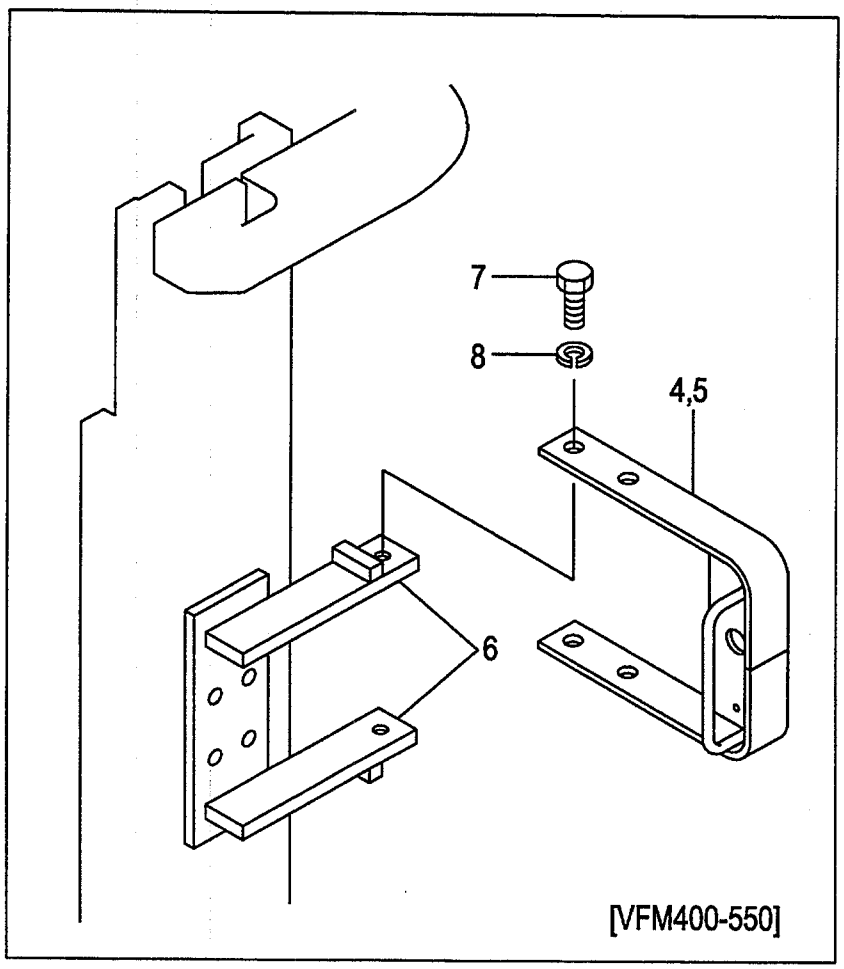

A:AP231F(VFHM/J)

Item No	Part No.	Mark	Description		Req'd	Remarks : Serial No.
1	239A5-12521		BRACKET,RH	ﾌﾞﾗｹｯﾄ	1	[(AR4,AR5,4AP,5AP,ARD,ARE) /(VFHM360,600-750)]
-	239A5-12521		BRACKET,RH	ﾌﾞﾗｹｯﾄ	1	[(A3R,A4R,A3S,A4S) /(VFHM360,600-750)]
2	239A5-12501		BRACKET,LH	ﾌﾞﾗｹｯﾄ	1	[(AR4,AR5,4AP,5AP,ARD,ARE) /(VFHM360,600-750)]
-	239A5-12501		BRACKET,LH	ﾌﾞﾗｹｯﾄ	1	[(A3R,A4R,A3S,A4S) /(VFHM360,600-750)]
3	01183-08016		BOLT	ﾎﾞﾙﾄ	4	[(AR4,AR5,4AP,5AP,ARD,ARE) /(VFHM360,600-750)]
-	01183-08016		BOLT	ﾎﾞﾙﾄ	4	[(A3R,A4R,A3S,A4S) /(VFHM360,600-750)]
4	534A9-22001		BRACKET,RH	ﾌﾞﾗｹｯﾄ	1	[(AR4,AR5,4AP,5AP,ARD,ARE) /VFHM400-550]
-	534A9-22001		BRACKET,RH	ﾌﾞﾗｹｯﾄ	1	[(A3R,A4R,A3S,A4S)/VFHM400-550]
5	534A9-22011		BRACKET,LH	ﾌﾞﾗｹｯﾄ	1	[(AR4,AR5,4AP,5AP,ARD,ARE) /VFHM400-550]
-	534A9-22011		BRACKET,LH	ﾌﾞﾗｹｯﾄ	1	[(A3R,A4R,A3S,A4S)/VFHM400-550]
6	621B0-12641		BRACKET	ﾌﾞﾗｹｯﾄ	4	[(AR4,AR5,4AP,5AP,ARD,ARE) /VFHM400-550]
-	621B0-12641		BRACKET	ﾌﾞﾗｹｯﾄ	4	[(A3R,A4R,A3S,A4S)/VFHM400-550]
7	01100-12020		BOLT	ﾎﾞﾙﾄ	4	[(AR4,AR5,4AP,5AP,ARD,ARE) /VFHM400-550]
-	01100-12020		BOLT	ﾎﾞﾙﾄ	4	[(A3R,A4R,A3S,A4S)/VFHM400-550]
8	02010-00012		WASHER	ﾜｯｼｬ	4	[(AR4,AR5,4AP,5AP,ARD,ARE) /VFHM400-550]
-	02010-00012		WASHER	ﾜｯｼｬ	4	[(A3R,A4R,A3S,A4S)/VFHM400-550]
9	239A2-42221	+	WIRE-HARNESS,HG	ﾜｲﾔﾊｰﾈｽ	2	[(AR4,AR5,4AP,5AP,ARD,ARE) /(VFHM360,600-750)]
-	239A2-42221	+	WIRE-HARNESS,HG	ﾜｲﾔﾊｰﾈｽ	2	[(A3R,A4R,A3S,A4S) /(VFHM360,600-750)]
-	534A9-22201	+	WIRE-HARNESS,HG	ﾜｲﾔﾊｰﾈｽ	2	[(AR4,AR5,4AP,5AP,ARD,ARE) /VFHM400-435]
-	534A9-22201	+	WIRE-HARNESS,HG	ﾜｲﾔﾊｰﾈｽ	2	[(A3R,A4R,A3S,A4S)/VFHM400-435]
-	534A9-22211	+	WIRE-HARNESS,HG	ﾜｲﾔﾊｰﾈｽ	2	[(AR4,AR5,4AP,5AP,ARD,ARE) /VFHM480-550]
-	534A9-22211	+	WIRE-HARNESS,HG	ﾜｲﾔﾊｰﾈｽ	2	[(A3R,A4R,A3S,A4S)/VFHM480-550]
10	27732-42221	+	CLAMP	ｸﾗﾝﾌﾟ	2	[(AR4,AR5,4AP,5AP,ARD,ARE) /VFHM400-750]
-	27732-42221	+	CLAMP	ｸﾗﾝﾌﾟ	2	[(A3R,A4R,A3S,A4S)/VFHM400-750]
11	04913-11100	+	BAND	ﾊﾞﾝﾄﾞ	2	[(AR4,AR5,4AP,5AP,ARD,ARE) /(VFHM360,600-750)]
-	04913-11100	+	BAND	ﾊﾞﾝﾄﾞ	2	[(A3R,A4R,A3S,A4S) /(VFHM360,600-750)]
-	04913-11380	+	BAND	ﾊﾞﾝﾄﾞ	4	[(AR4,AR5,4AP,5AP,ARD,ARE) /VFHM400-435]
-	04913-11380	+	BAND	ﾊﾞﾝﾄﾞ	4	[(A3R,A4R,A3S,A4S)/VFHM400-435]
-	04913-11380	+	BAND	ﾊﾞﾝﾄﾞ	6	[(AR4,AR5,4AP,5AP,ARD,ARE) /VFHM480-550]
-	04913-11380	+	BAND	ﾊﾞﾝﾄﾞ	6	[(A3R,A4R,A3S,A4S)/VFHM480-550]

FIG.186 LAMP BKT.[AP231F/(AR4,AR5,4AP,5AP,ARD, ARE,A3R,A4R,A3S,A4S)]

(A503APT0) ﾗﾝﾌﾟﾌﾞﾗｹｯﾄ

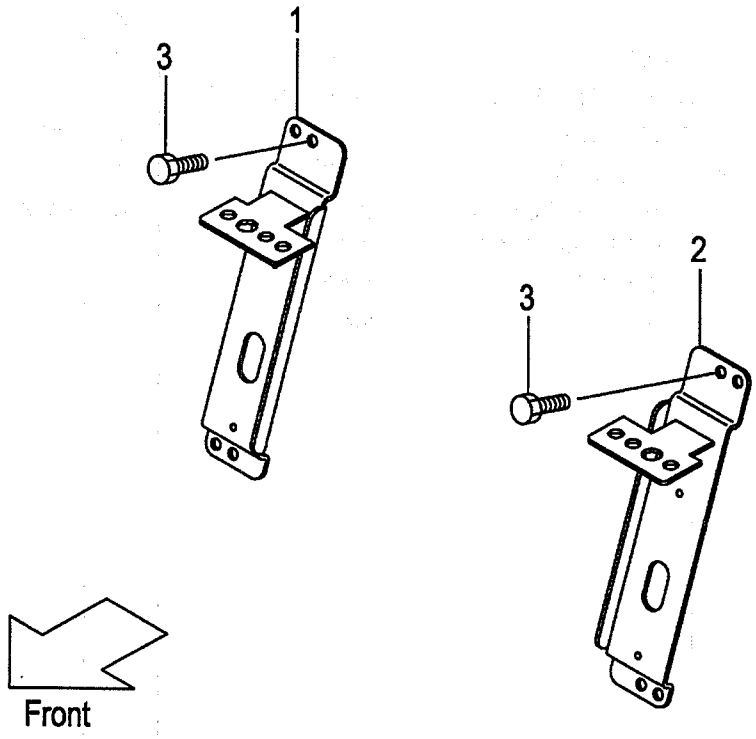

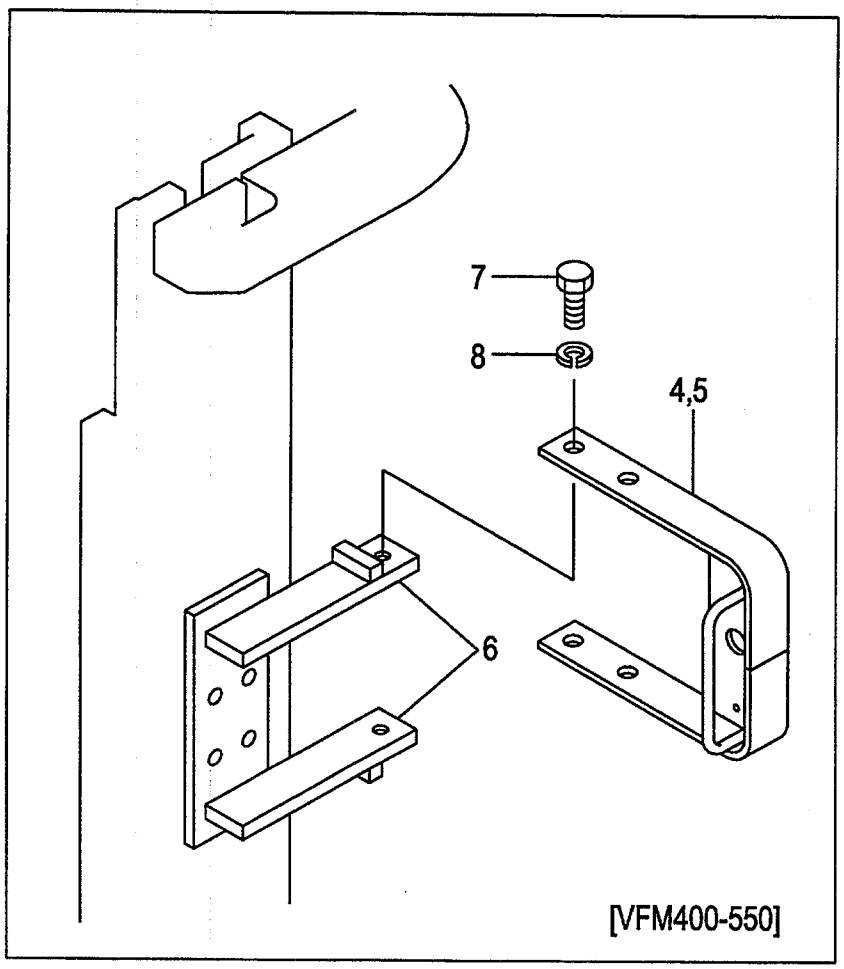

A:AP231F(VFHM/J)

Item No	Part No.	Mark	Description		Req'd	Remarks : Serial No.
12	534A9-22301	+	PLATE	ﾌﾟﾚｰﾄ	2	[(AR4,AR5,4AP,5AP,ARD,ARE) /VFHM400-550]
-	534A9-22301	+	PLATE	ﾌﾟﾚｰﾄ	2	[(A3R,A4R,A3S,A4S)/VFHM400-550]
13	216G2-40602	+	LAMP,HEAD	ﾗﾝﾌﾟ	2	[AR4][AR5][4AP][5AP][ARD] [ARE] INC.14
-	216G2-40602	+	LAMP,HEAD	ﾗﾝﾌﾟ	2	[A3R][A4R][A3S][A4S] INC.14
14	216G2-40611	+	BULB,12V/55W	ﾊﾞﾙﾌﾞ	1	[AR4][AR5][4AP][5AP][ARD] [ARE][A3R][A4R][A3S][A4S]
15	216G2-40701	+	LAMP,COMBI.,FRONT	ﾗﾝﾌﾟ	2	[AR4][AR5][4AP][5AP][ARD] [ARE] INC.16-18
-	216G2-40701	+	LAMP,COMBI.,FRONT	ﾗﾝﾌﾟ	2	[A3R][A4R][A3S][A4S] INC.16-18
16	216G2-40711	+	BULB,TURN-SIGNAL	ﾊﾞﾙﾌﾞ	1	[AR4][AR5][4AP][5AP][ARD] [ARE][A3R][A4R][A3S][A4S]
17	216G2-40721	+	BULB,12V/10W	ﾊﾞﾙﾌﾞ	1	[AR4][AR5][4AP][5AP][ARD] [ARE][A3R][A4R][A3S][A4S]
18	216G2-40731	+	LENS	ﾚﾝｽﾞ	1	[AR4][AR5][4AP][5AP][ARD] [ARE][A3R][A4R][A3S][A4S]
19	01183-08016	+	BOLT	ﾎﾞﾙﾄ	4	[(AR4,AR5,4AP,5AP,ARD,ARE) /VFHM400-550]
-	01183-08016	+	BOLT	ﾎﾞﾙﾄ	4	[(A3R,A4R,A3S,A4S)/VFHM400-550]
20	534A9-22301	+	PLATE	ﾌﾟﾚｰﾄ	2	[(AR4,AR5,4AP,5AP,ARD,ARE) /VFHM400-550]
-	534A9-22301	+	PLATE	ﾌﾟﾚｰﾄ	2	[(A3R,A4R,A3S,A4S)/VFHM400-550]
21	62469-27001	+	DECAL,CAUTION	ﾃﾞｶﾙ	1	[ARD][ARE][A3S][A4S]

LAMP BRACKET [AP231F/HL]
FIG.187 [AP231F/HL/(4AP,5AP,AR4,AR5)]

(A503APU0) ﾗﾝﾌﾟﾌﾞﾗｹｯﾄ

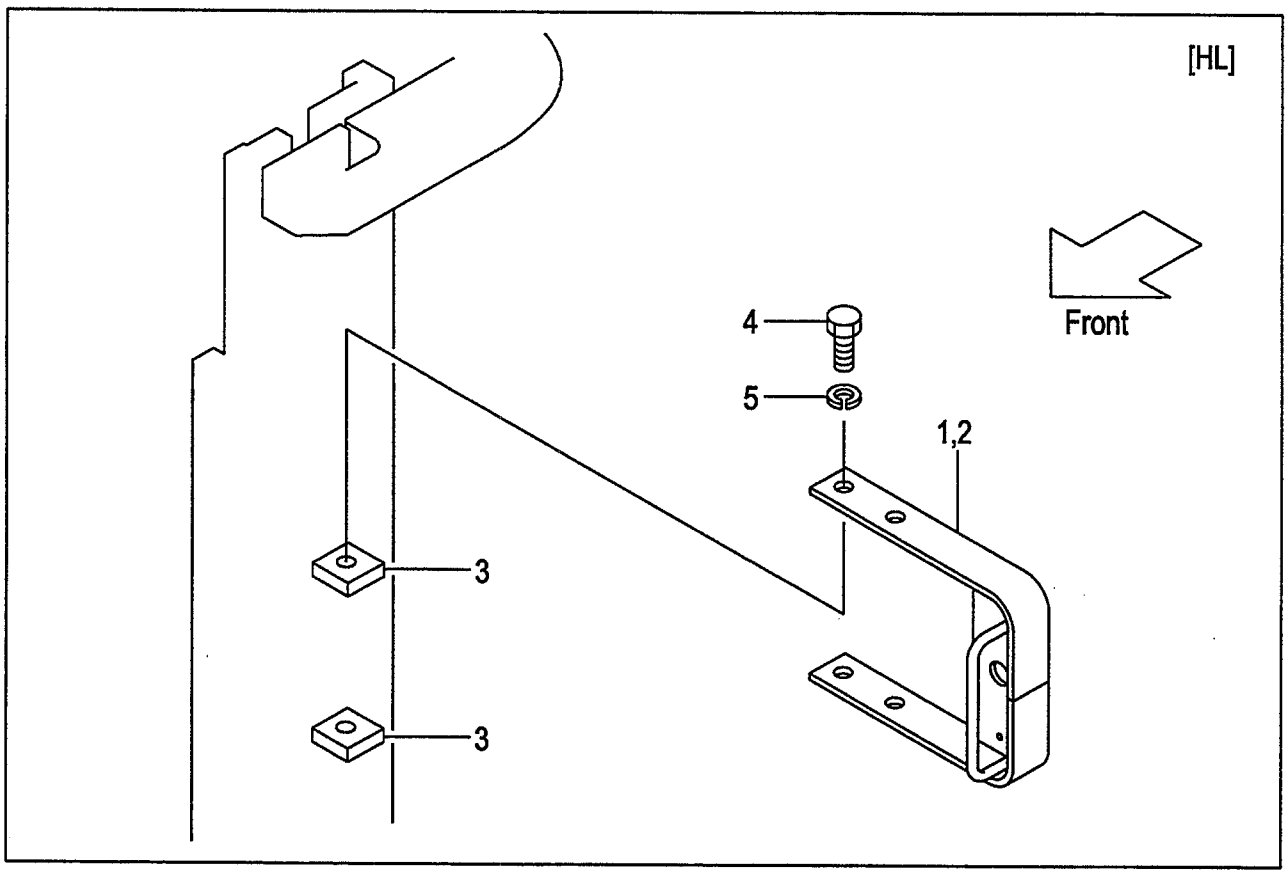

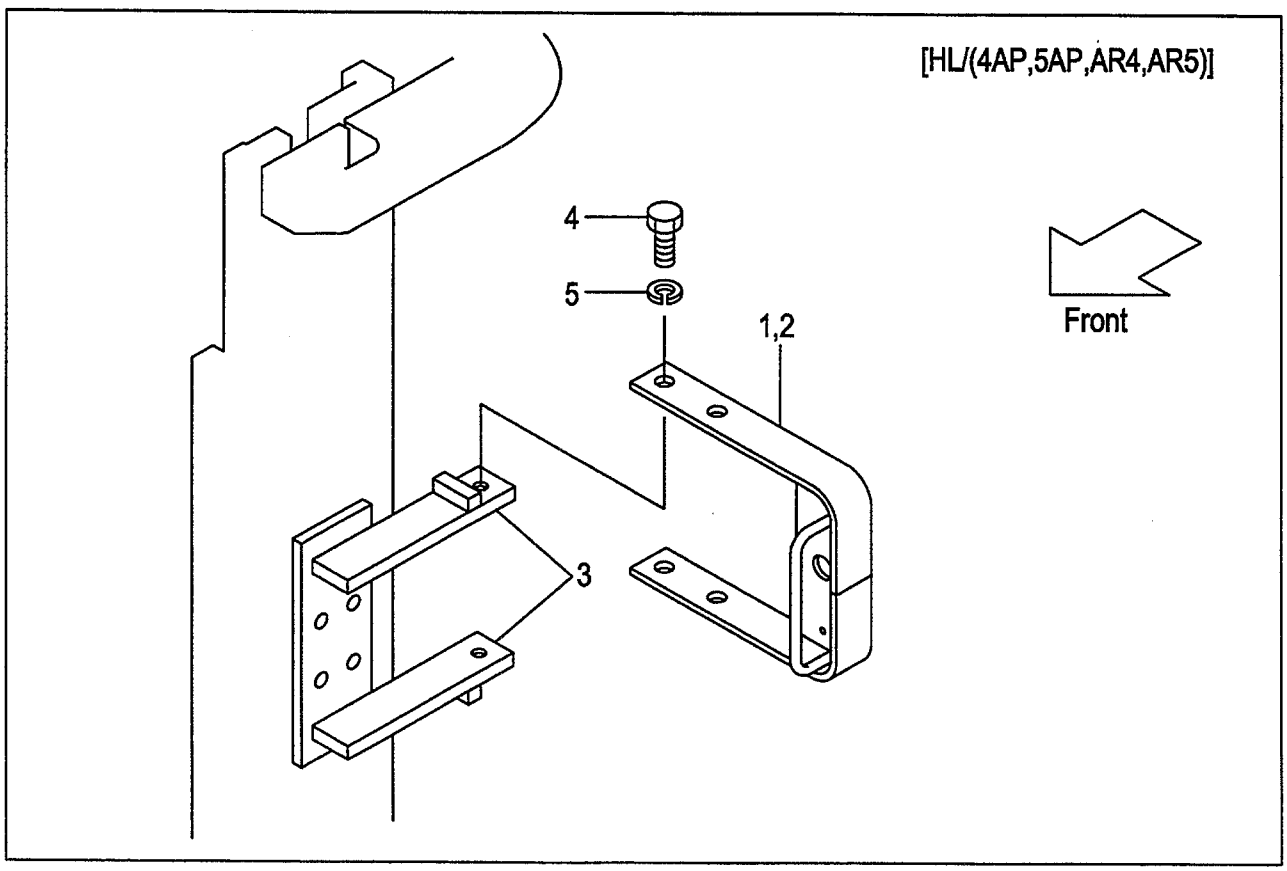

A:AP231F(VFHM/J)

Item No	Part No.	Mark	Description		Req'd	Remarks : Serial No.
1	534A9-22001		BRACKET,RH	ﾌﾞﾗｹｯﾄ	1	[HL]
-	534A9-22001		BRACKET,RH	ﾌﾞﾗｹｯﾄ	1	[HL/(4AP,5AP,AR4,AR5)]
2	534A9-22011		BRACKET,LH	ﾌﾞﾗｹｯﾄ	1	[HL]
-	534A9-22011		BRACKET,LH	ﾌﾞﾗｹｯﾄ	1	[HL/(4AP,5AP,AR4,AR5)]
3	534A9-22101		BRACKET,HL	ﾌﾞﾗｹｯﾄ	4	[HL]
-	621B0-12641		BRACKET,HL	ﾌﾞﾗｹｯﾄ	4	[HL/(4AP,5AP,AR4,AR5)]
4	01100-12020		BOLT	ﾎﾞﾙﾄ	4	[HL]
-	01100-12020		BOLT	ﾎﾞﾙﾄ	4	[HL/(4AP,5AP,AR4,AR5)]
5	02010-00012		WASHER	ﾜｯｼｬ	4	[HL]
-	02010-00012		WASHER	ﾜｯｼｬ	4	[HL/(4AP,5AP,AR4,AR5)]
6	534A9-22201	+	WIRE-HARNESS,HG	ﾜｲﾔﾊｰﾈｽ	2	[HL/VFHM360-400]
-	534A9-22201	+	WIRE-HARNESS,HG	ﾜｲﾔﾊｰﾈｽ	2	[HL/(4AP,5AP,AR4,AR5) /VFHM360-435]
-	534A9-22211	+	WIRE-HARNESS,HG	ﾜｲﾔﾊｰﾈｽ	2	[HL/VFHM435-750]
-	534A9-22211	+	WIRE-HARNESS,HG	ﾜｲﾔﾊｰﾈｽ	2	[HL/(4AP,5AP,AR4,AR5) /VFHM480-750]
7	27732-42221	+	CLAMP	ｸﾗﾝﾌﾟ	2	[HL]
-	27732-42221	+	CLAMP	ｸﾗﾝﾌﾟ	2	[HL/(4AP,5AP,AR4,AR5)]
8	04913-11380	+	BAND	ﾊﾞﾝﾄﾞ	4	[HL]
-	04913-11380	+	BAND	ﾊﾞﾝﾄﾞ	4	[HL/(4AP,5AP,AR4,AR5) /VFHM360-435]
-	04913-11380	+	BAND	ﾊﾞﾝﾄﾞ	6	[HL/(4AP,5AP,AR4,AR5) /VFHM480-750]
9	534A9-22301	+	PLATE	ﾌﾟﾚｰﾄ	2	[HL]
-	534A9-22301	+	PLATE	ﾌﾟﾚｰﾄ	2	[HL/(4AP,5AP,AR4,AR5)]
10	216G2-40602	+	LAMP,HEAD	ﾗﾝﾌﾟ	2	[HL] INC.11
-	216G2-40602	+	LAMP,HEAD	ﾗﾝﾌﾟ	2	[HL/(4AP,5AP,AR4,AR5)] INC.11
11	216G2-40611	+	BULB,12V/55W	ﾊﾞﾙﾌﾞ	1	[HL]
-	216G2-40611	+	BULB,12V/55W	ﾊﾞﾙﾌﾞ	1	[HL/(4AP,5AP,AR4,AR5)]
12	216G2-40701	+	LAMP,COMBI.,FRONT	ﾗﾝﾌﾟ	2	[HL] INC.13-15
-	216G2-40701	+	LAMP,COMBI.,FRONT	ﾗﾝﾌﾟ	2	[HL/(4AP,5AP,AR4,AR5)] INC.13-15
13	216G2-40711	+	BULB,TURN-SIGNAL	ﾊﾞﾙﾌﾞ	1	[HL]
-	216G2-40711	+	BULB,TURN-SIGNAL	ﾊﾞﾙﾌﾞ	1	[HL/(4AP,5AP,AR4,AR5)]
14	216G2-40721	+	BULB,12V/10W	ﾊﾞﾙﾌﾞ	1	[HL]
-	216G2-40721	+	BULB,12V/10W	ﾊﾞﾙﾌﾞ	1	[HL/(4AP,5AP,AR4,AR5)]
15	216G2-40731	+	LENS	ﾚﾝｽﾞ	1	[HL]
-	216G2-40731	+	LENS	ﾚﾝｽﾞ	1	[HL/(4AP,5AP,AR4,AR5)]
16	01183-08016	+	BOLT & WASHER	ﾎﾞﾙﾄ&ﾜｯｼｬ	4	[HL]
-	01183-08016	+	BOLT & WASHER	ﾎﾞﾙﾄ&ﾜｯｼｬ	4	[HL/(4AP,5AP,AR4,AR5)]

LAMP BRACKET [AP231F/BKH]
FIG.188 [AP231F/BKH/(4AP,5AP,AR4,AR5)]

(A503APW0) ﾗﾝﾌﾟﾌﾞﾗｹｯﾄ

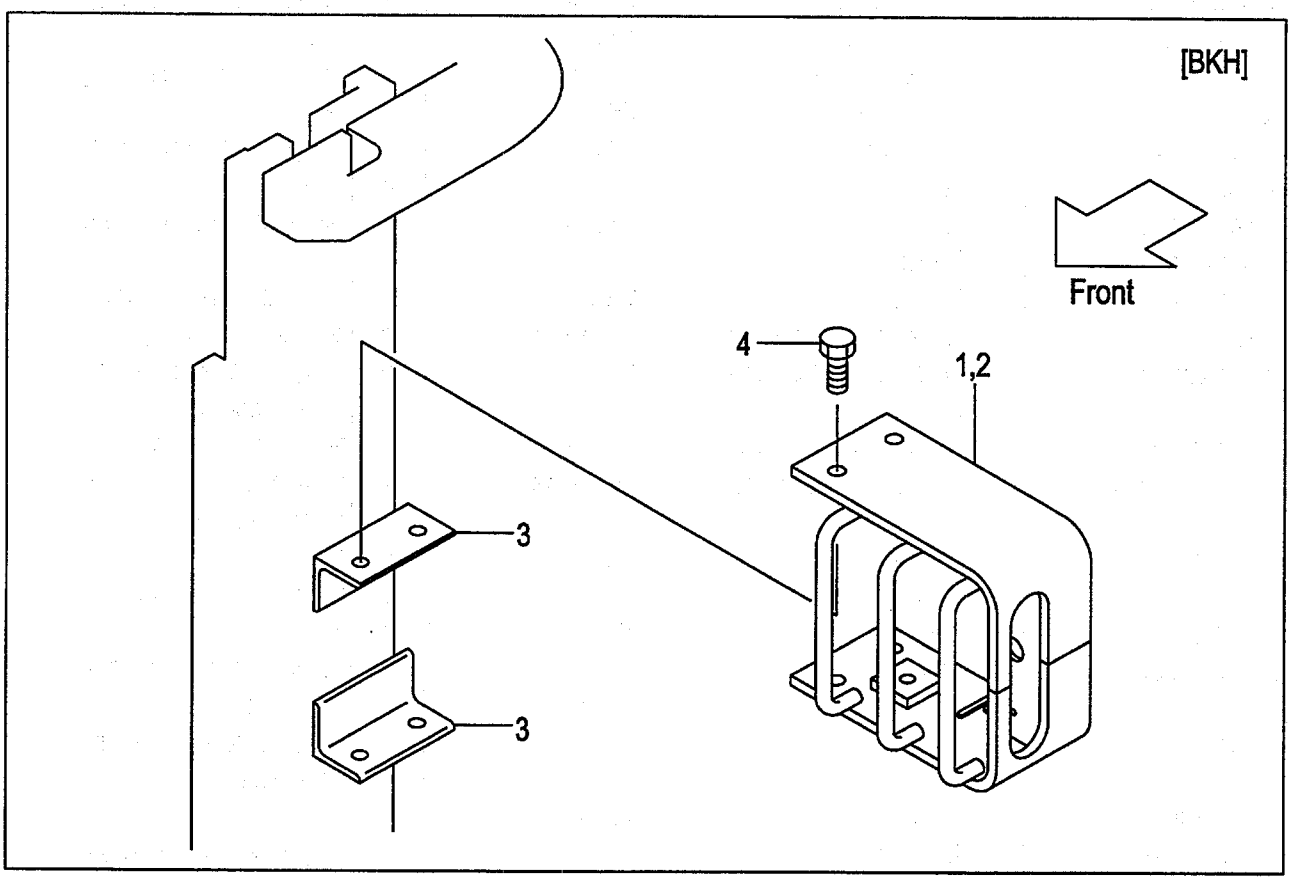

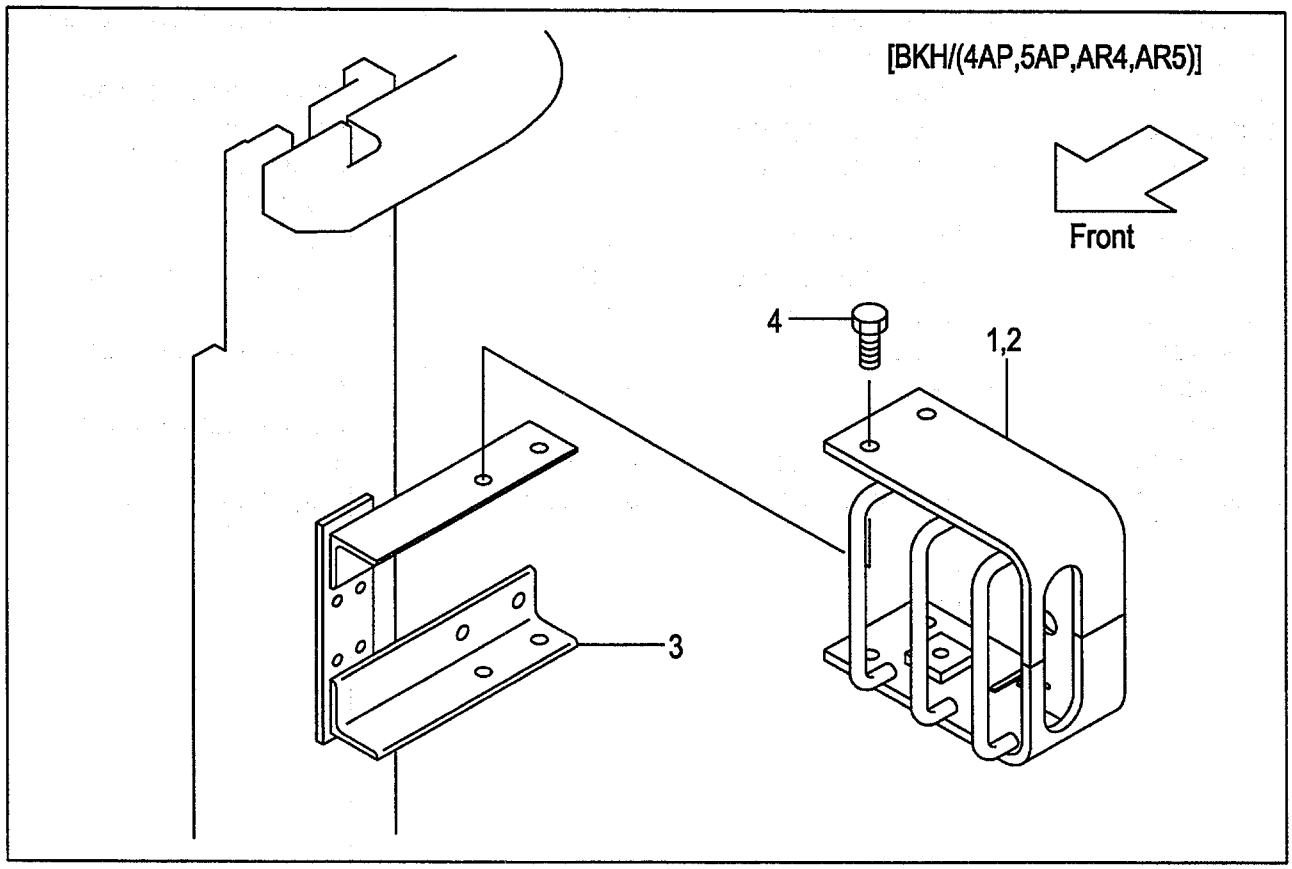

A:AP231F(VFHM/J)

Item No	Part No.	Mark	Description		Req'd	Remarks : Serial No.
1	534A4-22001		GUARD,RH	ｶﾞｰﾄﾞ	1	[BKH]
-	534A4-22001		GUARD,RH	ｶﾞｰﾄﾞ	1	[BKH/(4AP,5AP,AR4,AR5)]
2	534A4-22011		GUARD,LH	ｶﾞｰﾄﾞ	1	[BKH]
-	534A4-22011		GUARD,LH	ｶﾞｰﾄﾞ	1	[BKH/(4AP,5AP,AR4,AR5)]
3	534A4-22101		BRACKET,BKH	ﾌﾞﾗｹｯﾄ	4	[BKH]
-	621B0-12651		BRACKET,BKH	ﾌﾞﾗｹｯﾄ	4	[BKH/(4AP,5AP,AR4,AR5)]
4	01184-12020		BOLT	ﾎﾞﾙﾄ	8	[BKH]
-	01184-12020		BOLT	ﾎﾞﾙﾄ	8	[BKH/(4AP,5AP,AR4,AR5)]
5	534A9-22201	+	WIRE-HARNESS,HG	ﾜｲﾔﾊｰﾈｽ	2	[BKH/VFHM360-400]
-	534A9-22201	+	WIRE-HARNESS,HG	ﾜｲﾔﾊｰﾈｽ	2	[BKH/(4AP,5AP,AR4,AR5) /VFHM360-435]
-	534A9-22211	+	WIRE-HARNESS,HG	ﾜｲﾔﾊｰﾈｽ	2	[BKH/VFHM435-750]
-	534A9-22211	+	WIRE-HARNESS,HG	ﾜｲﾔﾊｰﾈｽ	2	[BKH/(4AP,5AP,AR4,AR5) /VFHM480-750]
6	27732-42221	+	CLAMP	ｸﾗﾝﾌﾟ	2	[BKH]
-	27732-42221	+	CLAMP	ｸﾗﾝﾌﾟ	2	[BKH/(4AP,5AP,AR4,AR5)]
7	04913-11380	+	BAND	ﾊﾞﾝﾄﾞ	4	[BKH]
-	04913-11380	+	BAND	ﾊﾞﾝﾄﾞ	4	[BKH/(4AP,5AP,AR4,AR5) /VFHM360-435]
-	04913-11380	+	BAND	ﾊﾞﾝﾄﾞ	6	[BKH/(4AP,5AP,AR4,AR5) /VFHM480-750]
8	534A9-22301	+	PLATE	ﾌﾟﾚｰﾄ	2	[BKH]
-	534A9-22301	+	PLATE	ﾌﾟﾚｰﾄ	2	[BKH/(4AP,5AP,AR4,AR5) /VFHM250-600]
9	216G2-40602	+	LAMP,HEAD	ﾗﾝﾌﾟ	2	[BKH] INC.10
-	216G2-40602	+	LAMP,HEAD	ﾗﾝﾌﾟ	2	[BKH/(4AP,5AP,AR4,AR5)] INC.10
10	216G2-40611	+	BULB,12V/55W	ﾊﾞﾙﾌﾞ	1	[BKH]
-	216G2-40611	+	BULB,12V/55W	ﾊﾞﾙﾌﾞ	1	[BKH/(4AP,5AP,AR4,AR5)]
11	216G2-40701	+	LAMP,COMBI.,FRONT	ﾗﾝﾌﾟ	2	[BKH] INC.12-14
-	216G2-40701	+	LAMP,COMBI.,FRONT	ﾗﾝﾌﾟ	2	[BKH/(4AP,5AP,AR4,AR5)] INC.12-14
12	216G2-40711	+	BULB,TURN-SIGNAL	ﾊﾞﾙﾌﾞ	1	[BKH]
-	216G2-40711	+	BULB,TURN-SIGNAL	ﾊﾞﾙﾌﾞ	1	[BKH/(4AP,5AP,AR4,AR5)]
13	216G2-40721	+	BULB,12V/10W	ﾊﾞﾙﾌﾞ	1	[BKH]
-	216G2-40721	+	BULB,12V/10W	ﾊﾞﾙﾌﾞ	1	[BKH/(4AP,5AP,AR4,AR5)]
14	216G2-40731	+	LENS	ﾚﾝｽﾞ	1	[BKH]
-	216G2-40731	+	LENS	ﾚﾝｽﾞ	1	[BKH/(4AP,5AP,AR4,AR5)]
15	01183-08016	+	BOLT & WASHER	ﾎﾞﾙﾄ&ﾜｯｼｬ	4	[BKH]
-	01183-08016	+	BOLT & WASHER	ﾎﾞﾙﾄ&ﾜｯｼｬ	4	[BKH/(4AP,5AP,AR4,AR5)]

LAMP BKT.[AP231F/HLG]

FIG.189 [AP231F/HLG/(4AP,5AP,A3R,A4R,AR4,AR5)]

(A503APX0) ﾗﾝﾌﾟﾌﾞﾗｹｯﾄ

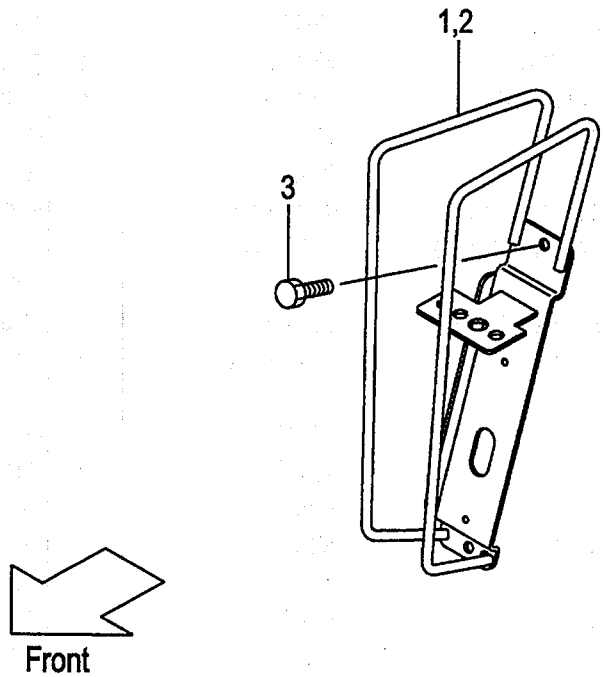

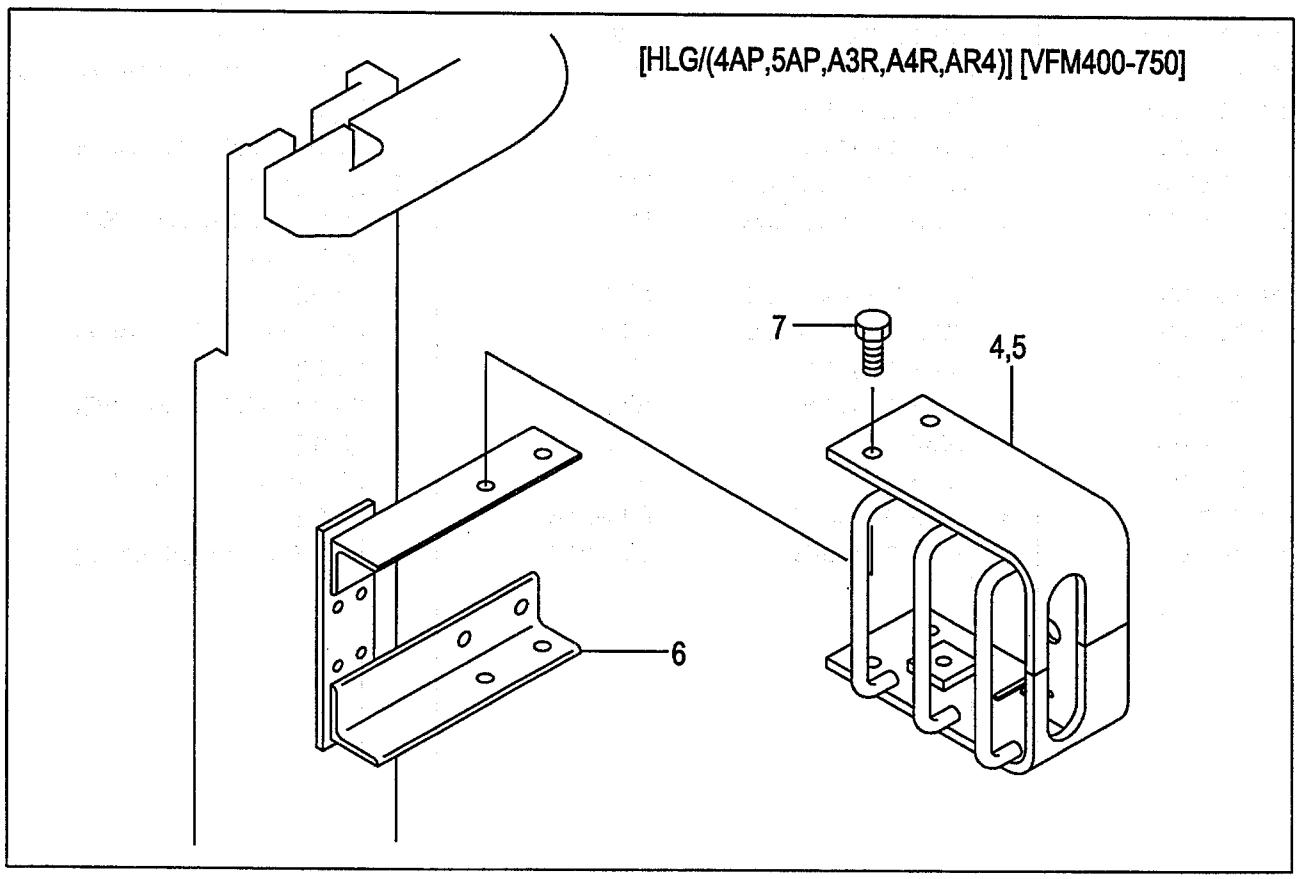

A:AP231F(VFHM/J)

Item No	Part No.	Mark	Description		Req'd	Remarks : Serial No.
1	539A5-12041		GUARD,LAMP,RH	ｶﾞｰﾄﾞ	1	[HLG]
-	539A5-12041		GUARD,LAMP,RH	ｶﾞｰﾄﾞ	1	[HLG/ (4AP,5AP,A3R,A4R,AR4,AR5) /(VFHM360,600-750)]
2	539A5-12011		GUARD,LAMP,LH	ｶﾞｰﾄﾞ	1	[HLG]
-	539A5-12011		GUARD,LAMP,LH	ｶﾞｰﾄﾞ	1	[HLG/ (4AP,5AP,A3R,A4R,AR4,AR5) /(VFHM360,600-750)]
3	01183-08016		BOLT & WASHER	ﾎﾞﾙﾄ&ﾜｯｼｬ	4	[HLG]
-	01183-08016	+	BOLT & WASHER	ﾎﾞﾙﾄ&ﾜｯｼｬ	4	[HLG/ (4AP,5AP,A3R,A4R,AR4,AR5) /(VFHM360,600-750)]
4	534A4-22001		GUARD,RH	ｶﾞｰﾄﾞ	1	[HLG/ (4AP,5AP,A3R,A4R,AR4,AR5) /VFHM400-550]
5	534A4-22011		GUARD,LH	ｶﾞｰﾄﾞ	1	[HLG/ (4AP,5AP,A3R,A4R,AR4,AR5) /VFHM400-550]
6	621B0-12651		BRACKET,BKH	ﾌﾞﾗｹｯﾄ	4	[HLG/ (4AP,5AP,A3R,A4R,AR4,AR5) /VFHM400-550]
7	01184-12020		BOLT	ﾎﾞﾙﾄ	8	[HLG/ (4AP,5AP,A3R,A4R,AR4,AR5) /VFHM400-550]
8	239A2-42221	+	WIRE-HARNESS,HG	ﾜｲﾔﾊｰﾈｽ	2	[HLG]
-	239A2-42221	+	WIRE-HARNESS,HG	ﾜｲﾔﾊｰﾈｽ	2	[HLG/ (4AP,5AP,A3R,A4R,AR4,AR5) /(VFHM360,600-750)]
-	534A9-22201	+	WIRE-HARNESS,HG	ﾜｲﾔﾊｰﾈｽ	2	[HLG/ (4AP,5AP,A3R,A4R,AR4,AR5) /VFHM400-435]
-	534A9-22211	+	WIRE-HARNESS,HG	ﾜｲﾔﾊｰﾈｽ	2	[HLG/ (4AP,5AP,A3R,A4R,AR4,AR5) /VFHM480-550]
9	27732-42221	+	CLAMP	ｸﾗﾝﾌﾟ	2	[HLG/ (4AP,5AP,A3R,A4R,AR4,AR5) /VFHM400-550]
10	04913-11100	+	BAND	ﾊﾞﾝﾄﾞ	2	[HLG]
-	04913-11100	+	BAND	ﾊﾞﾝﾄﾞ	2	[HLG/ (4AP,5AP,A3R,A4R,AR4,AR5) /(VFHM360,600-750)]
-	04913-11380	+	BAND	ﾊﾞﾝﾄﾞ	4	[HLG/ (4AP,5AP,A3R,A4R,AR4,AR5) /VFHM400-550]
11	534A9-22301	+	PLATE	ﾌﾟﾚｰﾄ	2	[HLG/ (4AP,5AP,A3R,A4R,AR4,AR5) /VFHM400-550]
12	216G2-40602	+	LAMP,HEAD	ﾗﾝﾌﾟ	2	[HLG] INC.13

LAMP BKT.[AP231F/HLG]

FIG.189 [AP231F/HLG/(4AP,5AP,A3R,A4R,AR4,AR5)]

(A503APX0) ﾗﾝﾌﾟﾌﾞﾗｹｯﾄ

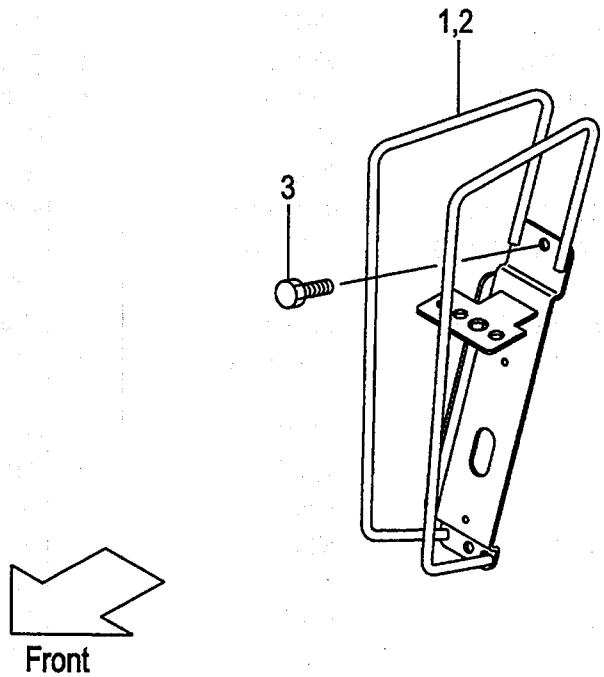

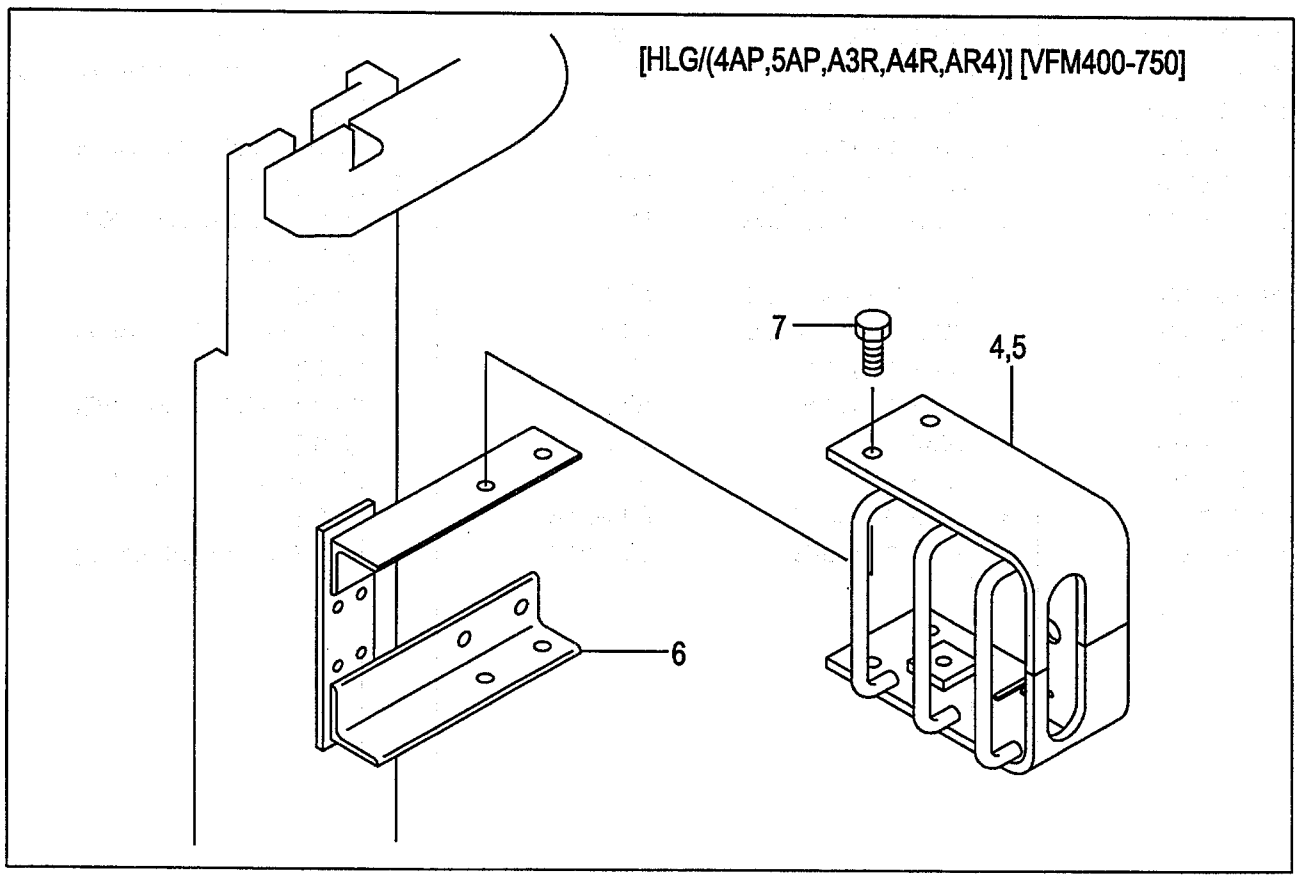

A:AP231F(VFHM/J)

Item No	Part No.	Mark	Description		Req'd	Remarks : Serial No.
-	216G2-40602	+	LAMP,HEAD	ﾗﾝﾌﾟ	2	[HLG/ (4AP,5AP,A3R,A4R,AR4,AR5)] INC.13
13	216G2-40611	+	BULB,12V/55W	ﾊﾞﾙﾌﾞ	1	[HLG]
-	216G2-40611	+	BULB,12V/55W	ﾊﾞﾙﾌﾞ	1	[HLG/ (4AP,5AP,A3R,A4R,AR4,AR5)]
14	216G2-40701	+	LAMP,COMBI.,FRONT	ﾗﾝﾌﾟ	2	[HLG] INC.15-17
-	216G2-40701	+	LAMP,COMBI.,FRONT	ﾗﾝﾌﾟ	2	[HLG/ (4AP,5AP,A3R,A4R,AR4,AR5)] INC.15-17
15	216G2-40711	+	BULB,TURN-SIGNAL	ﾊﾞﾙﾌﾞ	1	[HLG]
-	216G2-40711	+	BULB,TURN-SIGNAL	ﾊﾞﾙﾌﾞ	1	[HLG/ (4AP,5AP,A3R,A4R,AR4,AR5)]
16	216G2-40721	+	BULB,12V/10W	ﾊﾞﾙﾌﾞ	1	[HLG]
-	216G2-40721	+	BULB,12V/10W	ﾊﾞﾙﾌﾞ	1	[HLG/ (4AP,5AP,A3R,A4R,AR4,AR5)]
17	216G2-40731	+	LENS	ﾚﾝｽﾞ	1	[HLG]
-	216G2-40731	+	LENS	ﾚﾝｽﾞ	1	[HLG/ (4AP,5AP,A3R,A4R,AR4,AR5)]
18	01183-08016	+	BOLT & WASHER	ﾎﾞﾙﾄ&ﾜｯｼｬ	4	[HLG/ (4AP,5AP,A3R,A4R,AR4,AR5) /VFHM400-550]

PARTS NUMBER INDEX

Part No.	Fig.No.	Part No.	Fig.No.	Part No.	Fig.No.	Part No.	Fig.No.
BS-51502-08610	139	W-675514	5	01100-10016	149	01100-12035	67
BS-51502-08610	140	W-675515	5	01100-10016	150	01100-12035	73
BS-51502-08610	141	W-678832	5	01100-10016	151	01100-12035	74
BS-51502-08610	142	W-683182	5	01100-10016	154	01100-12035	83
BS-51502-08610	146	W-684588	5	01100-10016	167	01100-12035	84
BS-51502-08610	150	W-7403	13	01100-10016	173	01100-12035	109
BS-51502-08610	151	W-769573	5	01100-10016	179	01100-12035	123
BS-51502-08610	152	W-7890	5	01100-10016	180	01100-14025	1
BS-51502-08610	153	01100-08012	52	01100-10016	181	01100-14025	5
BS-51502-08610	169	01100-08012	53	01100-10016	184	01100-14025	5
BS-51502-08610	170	01100-08012	54	01100-10020	1	01100-14025	5
BS-51502-08610	171	01100-08012	55	01100-10020	9	01100-14025	9
BS-51502-08610	172	01100-08012	64	01100-10020	31	01100-14025	13
BS-51502-08610	180	01100-08012	65	01100-10025	75	01100-14025	13
BS-51502-08610	181	01100-08012	66	01100-10025	75	01100-14025	13
BS-51502-08610	182	01100-08012	67	01100-10025	91	01100-14030	1
BS-51502-08610	183	01100-08012	137	01100-10025	91	01100-14030	1
W-204182	5	01100-08012	143	01100-10040	75	01100-14030	5
W-204186	5	01100-08012	154	01100-10040	91	01100-14030	5
W-204186	13	01100-08012	167	01100-10045	44	01100-14030	9
W-206488	14	01100-08012	173	01100-10045	56	01100-14030	9
W-208350	13	01100-08012	184	01100-12020	21	01100-14030	13
W-21006-1	5	01100-08016	44	01100-12020	22	01100-14030	13
W-21006-1	6	01100-08016	56	01100-12020	28	01100-14030	17
W-218324	6	01100-08016	74	01100-12020	29	01100-14030	24
W-218361	5	01100-08016	75	01100-12020	68	01100-14035	1
W-218363	5	01100-08016	75	01100-12020	69	01100-14035	5
W-219400	5	01100-08016	84	01100-12020	79	01100-14035	9
W-219868	6	01100-08016	91	01100-12020	80	01100-14035	13
W-220689	5	01100-08016	91	01100-12020	87	01100-14040	38
W-220888	5	01100-08016	107	01100-12020	88	01100-16045	85
W-221733	5	01100-08016	121	01100-12020	94	01100-16045	116
W-221906	5	01100-08045	20	01100-12020	95	01100-16050	56
W-228782	5	01100-08045	27	01100-12020	108	01100-16050	149
W-415866	6	01100-08045	50	01100-12020	122	01100-16050	150
W-553857	5	01100-08045	51	01100-12020	145	01100-16050	151
W-553857	13	01100-08045	54	01100-12020	145	01100-16050	179
W-562055	14	01100-08045	55	01100-12020	146	01100-16050	180
W-562127	14	01100-08045	62	01100-12020	146	01100-16050	181
W-562131	6	01100-08045	63	01100-12020	156	01100-16055	1
W-562131	14	01100-08045	66	01100-12020	156	01100-16055	9
W-562132	6	01100-08045	67	01100-12020	157	01100-16055	44
W-562132	14	01100-08045	77	01100-12020	157	01100-16055	85
W-562792	14	01100-08045	85	01100-12020	175	01100-16055	116
W-562942	14	01100-08045	92	01100-12020	175	01100-16085	77
W-562951	14	01100-08045	97	01100-12020	176	01100-16085	102
W-563278	14	01100-08045	102	01100-12020	176	01100-16085	130
W-563388	14	01100-08045	112	01100-12020	186	01100-16085	131
W-563469	14	01100-08045	116	01100-12020	186	01100-16085	133
W-563487	14	01100-08045	126	01100-12020	187	01100-16085	134
W-583971	13	01100-08050	46	01100-12020	187	01100-16085	135
W-583971	14	01100-08050	47	01100-12025	1	01100-16085	136
W-601676	5	01100-08050	52	01100-12025	9	01100-16085	160
W-601676	14	01100-08050	53	01100-12035	52	01100-16085	161
W-639121	5	01100-08050	58	01100-12035	53	01100-16085	163
W-639121	13	01100-08050	59	01100-12035	54	01100-16085	164
W-666984	14	01100-08050	64	01100-12035	55	01100-16085	165
W-667225	5	01100-08050	65	01100-12035	64	01100-16085	166
W-667225	13	01100-10016	137	01100-12035	65	01100-16115	132
W-672018	13	01100-10016	143	01100-12035	66	01100-16115	133

PARTS NUMBER INDEX

Part No.	Fig.No.	Part No.	Fig.No.	Part No.	Fig.No.	Part No.	Fig.No.
01100-16115	134	01103-16070	116	01170-14030	116	01183-08016	158
01100-16115	162	01103-16070	116	01170-14030	125	01183-08016	158
01100-16115	163	01103-16070	116	01170-14030	126	01183-08016	159
01100-16115	164	01103-16080	85	01170-14030	129	01183-08016	159
01100-16140	138	01103-16080	116	01170-14045	77	01183-08016	159
01100-16140	139	01103-16085	77	01170-14045	85	01183-08016	168
01100-16140	140	01103-16085	85	01170-14045	92	01183-08016	168
01100-16140	149	01103-16085	102	01170-14045	97	01183-08016	168
01100-16140	150	01103-16085	116	01170-14045	102	01183-08016	169
01100-16140	151	01103-16120	77	01170-14045	112	01183-08016	169
01100-16140	168	01103-16120	102	01170-14045	116	01183-08016	169
01100-16140	169	01106-10025	78	01170-14045	126	01183-08016	170
01100-16140	170	01106-10025	93	01170-16040	98	01183-08016	170
01100-16140	179	01106-10025	103	01170-16040	99	01183-08016	170
01100-16140	180	01106-10025	113	01181-08030	137	01183-08016	171
01100-16140	181	01106-10025	117	01181-08030	143	01183-08016	172
01103-10020	31	01106-10025	127	01181-08030	154	01183-08016	174
01103-10020	34	01106-14040	31	01181-08030	167	01183-08016	175
01103-10020	38	01106-16045	98	01181-08030	173	01183-08016	175
01103-10020	38	01106-16045	99	01181-08030	184	01183-08016	175
01103-10020	41	01106-20040	100	01181-10025	137	01183-08016	175
01103-10025	44	01106-20040	101	01181-10025	143	01183-08016	176
01103-10025	56	01110-10025	77	01181-10025	154	01183-08016	176
01103-12025	44	01110-10025	85	01181-10025	167	01183-08016	177
01103-12025	56	01110-10025	92	01181-10025	173	01183-08016	177
01103-12035	77	01110-10025	97	01181-10025	184	01183-08016	178
01103-12035	85	01110-10025	102	01183-08016	138	01183-08016	178
01103-12035	92	01110-10025	112	01183-08016	138	01183-08016	178
01103-12035	97	01110-10025	116	01183-08016	138	01183-08016	178
01103-12035	102	01110-10025	126	01183-08016	139	01183-08016	179
01103-12035	112	01120-08025	1	01183-08016	139	01183-08016	180
01103-12035	116	01120-08025	9	01183-08016	139	01183-08016	181
01103-12035	126	01120-08025	13	01183-08016	140	01183-08016	185
01103-14045	77	01120-08025	31	01183-08016	140	01183-08016	186
01103-14045	85	01120-08025	34	01183-08016	140	01183-08016	186
01103-14045	92	01120-08025	38	01183-08016	141	01183-08016	186
01103-14045	97	01120-08025	41	01183-08016	142	01183-08016	186
01103-14045	102	01120-10014	68	01183-08016	144	01183-08016	187
01103-14045	112	01120-10014	68	01183-08016	145	01183-08016	187
01103-14045	116	01120-10014	69	01183-08016	145	01183-08016	188
01103-14045	126	01120-10014	69	01183-08016	145	01183-08016	188
01103-16025	34	01120-10014	79	01183-08016	145	01183-08016	189
01103-16025	41	01120-10014	79	01183-08016	146	01183-08016	189
01103-16030	34	01120-10014	80	01183-08016	146	01183-08016	189
01103-16030	41	01120-10014	80	01183-08016	147	01183-08020	149
01103-16030	92	01120-10014	87	01183-08016	147	01183-08020	150
01103-16030	97	01120-10014	87	01183-08016	148	01183-08020	151
01103-16030	112	01120-10014	88	01183-08016	148	01183-08020	179
01103-16030	126	01120-10014	88	01183-08016	148	01183-08020	180
01103-16040	92	01120-10014	94	01183-08016	148	01183-08020	181
01103-16040	97	01120-10014	94	01183-08016	149	01183-08035	138
01103-16040	112	01120-10014	95	01183-08016	150	01183-08035	139
01103-16040	126	01120-10014	95	01183-08016	151	01183-08035	140
01103-16070	77	01170-14030	77	01183-08016	155	01183-08035	168
01103-16070	77	01170-14030	85	01183-08016	156	01183-08035	169
01103-16070	85	01170-14030	92	01183-08016	156	01183-08035	170
01103-16070	85	01170-14030	97	01183-08016	156	01184-10016	31
01103-16070	85	01170-14030	102	01183-08016	156	01184-10016	38
01103-16070	102	01170-14030	112	01183-08016	157	01184-10020	36
01103-16070	102	01170-14030	115	01183-08016	157	01184-10020	43

PARTS NUMBER INDEX

Part No.	Fig.No.	Part No.	Fig.No.	Part No.	Fig.No.	Part No.	Fig.No.
01184-10025	3	01184-10035	164	01184-12065	182	01400-00008	44
01184-10025	7	01184-10035	165	01184-12065	183	01400-00008	44
01184-10025	11	01184-10035	166	01300-08032	44	01400-00008	44
01184-10025	15	01184-10035	169	01300-08032	44	01400-00008	56
01184-10025	19	01184-10035	170	01300-08032	44	01400-00008	56
01184-10025	20	01184-10035	179	01300-08032	44	01400-00008	56
01184-10025	26	01184-10035	180	01300-08032	44	01400-00008	56
01184-10025	27	01184-10035	180	01300-08032	44	01400-00008	56
01184-10025	46	01184-10035	181	01300-08032	44	01400-00008	56
01184-10025	47	01184-10035	181	01300-08032	44	01400-00008	56
01184-10025	48	01184-10035	182	01300-08032	44	01400-00008	56
01184-10025	49	01184-10035	183	01300-08032	44	01400-00008	56
01184-10025	50	01184-12020	147	01300-08032	44	01400-00008	56
01184-10025	51	01184-12020	147	01300-08032	44	01400-00008	56
01184-10025	58	01184-12020	148	01300-08032	44	01400-00008	56
01184-10025	59	01184-12020	158	01300-08032	44	01400-00008	56
01184-10025	60	01184-12020	158	01300-08032	44	01400-00008	56
01184-10025	61	01184-12020	159	01300-08032	44	01400-00008	56
01184-10025	62	01184-12020	177	01300-08032	44	01400-00008	56
01184-10025	63	01184-12020	177	01300-08032	44	01400-00008	56
01184-10025	71	01184-12020	178	01300-08032	56	01400-00008	56
01184-10025	71	01184-12020	188	01300-08032	56	01400-00008	135
01184-10025	72	01184-12020	188	01300-08032	56	01400-00008	136
01184-10025	72	01184-12020	189	01300-08032	56	01400-00008	137
01184-10025	81	01184-12025	1	01300-08032	56	01400-00008	143
01184-10025	81	01184-12025	9	01300-08032	56	01400-00008	154
01184-10025	82	01184-12025	31	01300-08032	56	01400-00008	165
01184-10025	82	01184-12025	34	01300-08032	56	01400-00008	166
01184-10025	90	01184-12025	38	01300-08032	56	01400-00008	167
01184-10025	90	01184-12025	41	01300-08032	56	01400-00008	173
01184-10025	96	01184-12025	98	01300-08032	56	01400-00008	184
01184-10025	96	01184-12025	99	01300-08032	56	01400-00010	68
01184-10025	114	01184-12025	100	01300-08032	56	01400-00010	68
01184-10025	128	01184-12025	101	01300-08032	56	01400-00010	69
01184-10030	149	01184-12050	1	01300-08032	56	01400-00010	69
01184-10030	150	01184-12050	9	01300-08032	56	01400-00010	79
01184-10030	151	01184-12050	17	01300-08032	56	01400-00010	79
01184-10030	179	01184-12050	24	01300-08032	56	01400-00010	80
01184-10030	180	01184-12050	31	01400-00008	1	01400-00010	80
01184-10030	181	01184-12050	34	01400-00008	9	01400-00010	87
01184-10035	130	01184-12050	38	01400-00008	13	01400-00010	87
01184-10035	131	01184-12050	41	01400-00008	31	01400-00010	88
01184-10035	132	01184-12050	92	01400-00008	34	01400-00010	88
01184-10035	133	01184-12050	97	01400-00008	38	01400-00010	94
01184-10035	134	01184-12050	112	01400-00008	41	01400-00010	94
01184-10035	135	01184-12050	126	01400-00008	44	01400-00010	95
01184-10035	136	01184-12065	139	01400-00008	44	01400-00010	95
01184-10035	139	01184-12065	140	01400-00008	44	01400-00010	137
01184-10035	140	01184-12065	141	01400-00008	44	01400-00010	143
01184-10035	149	01184-12065	142	01400-00008	44	01400-00010	154
01184-10035	150	01184-12065	150	01400-00008	44	01400-00010	167
01184-10035	150	01184-12065	151	01400-00008	44	01400-00010	173
01184-10035	151	01184-12065	152	01400-00008	44	01400-00010	184
01184-10035	151	01184-12065	153	01400-00008	44	01400-00016	138
01184-10035	152	01184-12065	169	01400-00008	44	01400-00016	139
01184-10035	153	01184-12065	170	01400-00008	44	01400-00016	140
01184-10035	160	01184-12065	171	01400-00008	44	01400-00016	149
01184-10035	161	01184-12065	172	01400-00008	44	01400-00016	150
01184-10035	162	01184-12065	180	01400-00008	44	01400-00016	151
01184-10035	163	01184-12065	181	01400-00008	44	01400-00016	168

PARTS NUMBER INDEX

Part No.	Fig.No.	Part No.	Fig.No.	Part No.	Fig.No.	Part No.	Fig.No.
01400-00016	169	02010-00008	44	02010-00008	91	02010-00012	69
01400-00016	170	02010-00008	44	02010-00008	107	02010-00012	73
01400-00016	179	02010-00008	44	02010-00008	121	02010-00012	74
01400-00016	180	02010-00008	44	02010-00008	135	02010-00012	79
01400-00016	181	02010-00008	44	02010-00008	136	02010-00012	80
01402-00010	137	02010-00008	44	02010-00008	137	02010-00012	83
01402-00010	143	02010-00008	44	02010-00008	137	02010-00012	84
01402-00010	154	02010-00008	44	02010-00008	143	02010-00012	87
01402-00010	167	02010-00008	44	02010-00008	143	02010-00012	88
01402-00010	173	02010-00008	44	02010-00008	154	02010-00012	94
01402-00010	184	02010-00008	44	02010-00008	154	02010-00012	95
01412-10016	2	02010-00008	44	02010-00008	165	02010-00012	109
01412-10016	10	02010-00008	46	02010-00008	166	02010-00012	123
02000-00008	20	02010-00008	47	02010-00008	167	02010-00012	145
02000-00008	27	02010-00008	50	02010-00008	167	02010-00012	145
02000-00008	46	02010-00008	51	02010-00008	173	02010-00012	146
02000-00008	47	02010-00008	52	02010-00008	173	02010-00012	146
02000-00008	50	02010-00008	52	02010-00008	184	02010-00012	156
02000-00008	51	02010-00008	53	02010-00008	184	02010-00012	156
02000-00008	52	02010-00008	53	02010-00010	31	02010-00012	157
02000-00008	53	02010-00008	54	02010-00010	31	02010-00012	157
02000-00008	54	02010-00008	54	02010-00010	34	02010-00012	175
02000-00008	55	02010-00008	55	02010-00010	38	02010-00012	175
02000-00008	58	02010-00008	55	02010-00010	38	02010-00012	176
02000-00008	59	02010-00008	56	02010-00010	41	02010-00012	176
02000-00008	62	02010-00008	56	02010-00010	75	02010-00012	186
02000-00008	63	02010-00008	56	02010-00010	75	02010-00012	186
02000-00008	64	02010-00008	56	02010-00010	77	02010-00012	187
02000-00008	65	02010-00008	56	02010-00010	85	02010-00012	187
02000-00008	66	02010-00008	56	02010-00010	91	02010-00014	1
02000-00008	67	02010-00008	56	02010-00010	91	02010-00014	1
02000-00008	137	02010-00008	56	02010-00010	92	02010-00014	5
02000-00008	143	02010-00008	56	02010-00010	97	02010-00014	5
02000-00008	154	02010-00008	56	02010-00010	102	02010-00014	9
02000-00008	167	02010-00008	56	02010-00010	112	02010-00014	9
02000-00008	173	02010-00008	56	02010-00010	116	02010-00014	13
02000-00008	184	02010-00008	56	02010-00010	126	02010-00014	13
02000-00010	1	02010-00008	56	02010-00010	137	02010-00014	17
02000-00010	9	02010-00008	56	02010-00010	143	02010-00014	24
02000-00016	138	02010-00008	56	02010-00010	149	02010-00016	1
02000-00016	139	02010-00008	56	02010-00010	154	02010-00016	9
02000-00016	140	02010-00008	56	02010-00010	167	02010-00016	44
02000-00016	149	02010-00008	56	02010-00010	173	02010-00016	56
02000-00016	150	02010-00008	58	02010-00010	179	02010-00016	77
02000-00016	151	02010-00008	59	02010-00010	184	02010-00016	85
02000-00016	168	02010-00008	62	02010-00012	1	02010-00016	102
02000-00016	169	02010-00008	63	02010-00012	9	02010-00016	116
02000-00016	170	02010-00008	64	02010-00012	21	02010-00016	130
02000-00016	179	02010-00008	64	02010-00012	22	02010-00016	131
02000-00016	180	02010-00008	65	02010-00012	28	02010-00016	132
02000-00016	181	02010-00008	65	02010-00012	29	02010-00016	133
02010-00008	20	02010-00008	66	02010-00012	52	02010-00016	134
02010-00008	27	02010-00008	66	02010-00012	53	02010-00016	135
02010-00008	44	02010-00008	67	02010-00012	54	02010-00016	136
02010-00008	44	02010-00008	67	02010-00012	55	02010-00016	138
02010-00008	44	02010-00008	74	02010-00012	64	02010-00016	139
02010-00008	44	02010-00008	75	02010-00012	65	02010-00016	140
02010-00008	44	02010-00008	75	02010-00012	66	02010-00016	149
02010-00008	44	02010-00008	84	02010-00012	67	02010-00016	149
02010-00008	44	02010-00008	91	02010-00012	68	02010-00016	150

PARTS NUMBER INDEX

Part No.	Fig.No.	Part No.	Fig.No.	Part No.	Fig.No.	Part No.	Fig.No.
02010-00016	150	02011-00016	92	02200-06060	42	03006-00210	93
02010-00016	151	02011-00016	97	02200-32020	138	03006-00210	103
02010-00016	151	02011-00016	98	02200-32020	139	03006-00210	113
02010-00016	160	02011-00016	99	02200-32020	140	03006-00210	117
02010-00016	161	02011-00016	102	02200-32020	149	03006-00210	127
02010-00016	162	02011-00016	102	02200-32020	150	03071-32008	78
02010-00016	163	02011-00016	112	02200-32020	151	03071-32008	93
02010-00016	164	02011-00016	116	02200-32020	168	03071-32008	103
02010-00016	165	02011-00016	116	02200-32020	169	03071-32008	113
02010-00016	166	02011-00016	116	02200-32020	170	03071-32008	117
02010-00016	168	02011-00016	126	02200-32020	179	03071-32008	127
02010-00016	169	02011-00020	100	02200-32020	180	03190-00026	77
02010-00016	170	02011-00020	101	02200-32020	181	03190-00026	85
02010-00016	179	02011-00024	100	02270-03010	44	03190-00026	92
02010-00016	179	02011-00024	101	02270-03010	44	03190-00026	97
02010-00016	180	02100-00030	23	02270-03010	56	03190-00026	102
02010-00016	180	02100-00030	30	02270-03010	56	03190-00026	112
02010-00016	181	02100-00030	76	02270-04020	68	03190-00026	116
02010-00016	181	02100-00030	110	02270-04020	69	03190-00026	126
02010-00020	108	02100-00030	124	02270-04020	79	03300-00390	2
02010-00020	122	02100-00036	75	02270-04020	80	03300-00390	10
02010-10016	150	02100-00036	91	02270-04020	87	03300-00390	18
02010-10016	151	02100-00045	1	02270-04020	88	03300-00390	25
02010-10016	180	02100-00045	1	02270-04020	94	03310-00600	1
02010-10016	181	02100-00045	9	02270-04020	95	03310-00600	9
02011-00010	44	02100-00045	9	02270-06040	1	03310-00750	78
02011-00010	56	02100-00045	17	02270-06040	9	03310-00750	93
02011-00010	78	02100-00045	17	02270-06040	17	03310-00750	103
02011-00010	93	02100-00045	24	02270-06040	24	03310-00750	113
02011-00010	103	02100-00045	24	02432-01008	1	03310-00750	117
02011-00010	113	02100-00045	31	02432-01008	5	03310-00750	127
02011-00010	117	02100-00045	34	02432-01008	9	03310-01400	78
02011-00010	127	02100-00045	34	02432-01008	13	03310-01400	93
02011-00012	44	02100-00045	38	02432-01008	17	03310-01400	103
02011-00012	56	02100-00045	41	02432-01008	24	03310-01400	113
02011-00012	77	02100-00045	92	02432-01008	31	03310-01400	117
02011-00012	85	02100-00045	97	02432-01008	34	03310-01400	127
02011-00012	92	02100-00045	112	02432-01008	38	03320-00110	3
02011-00012	97	02100-00045	126	02432-01008	41	03320-00110	4
02011-00012	102	02100-00050	78	02432-01008	44	03320-00110	11
02011-00012	112	02100-00050	93	02432-01008	56	03320-00110	12
02011-00012	116	02100-00050	103	02432-01008	68	03320-00110	19
02011-00012	126	02100-00050	113	02432-01008	69	03320-00110	20
02011-00014	31	02100-00050	117	02432-01008	79	03320-00110	21
02011-00014	38	02100-00050	127	02432-01008	80	03320-00110	22
02011-00014	77	02100-00060	44	02432-01008	87	03320-00110	26
02011-00014	85	02100-00060	44	02432-01008	88	03320-00110	27
02011-00014	92	02100-00060	56	02432-01008	94	03320-00110	28
02011-00014	97	02100-00060	56	02432-01008	95	03320-00110	29
02011-00014	102	02110-00042	18	02432-01008	98	03320-00140	21
02011-00014	112	02110-00042	25	02432-01008	99	03320-00140	22
02011-00014	116	02110-00062	70	02432-01008	100	03320-00140	28
02011-00014	126	02110-00062	89	02432-01008	101	03320-00140	29
02011-00016	34	02110-00072	32	03000-06210	78	03320-00140	33
02011-00016	41	02110-00072	39	03000-06210	93	03320-00140	33
02011-00016	77	02200-04030	2	03000-06210	103	03320-00140	36
02011-00016	77	02200-04030	10	03000-06210	113	03320-00140	37
02011-00016	85	02200-05050	45	03000-06210	117	03320-00140	40
02011-00016	85	02200-05050	57	03000-06210	127	03320-00140	40
02011-00016	85	02200-06060	35	03006-00210	78	03320-00140	43

PARTS NUMBER INDEX

Part No.	Fig.No.	Part No.	Fig.No.	Part No.	Fig.No.	Part No.	Fig.No.
03320-00140	46	03320-00140	82	03320-00140	151	03350-01100	32
03320-00140	46	03320-00140	83	03320-00140	151	03350-01100	39
03320-00140	47	03320-00140	83	03320-00140	152	03370-00850	35
03320-00140	47	03320-00140	83	03320-00140	152	03370-00850	42
03320-00140	48	03320-00140	83	03320-00140	153	03370-00850	70
03320-00140	49	03320-00140	84	03320-00140	153	03370-00850	89
03320-00140	50	03320-00140	84	03320-00140	160	04134-00202	19
03320-00140	51	03320-00140	84	03320-00140	160	04134-00202	26
03320-00140	52	03320-00140	84	03320-00140	161	04134-00303	21
03320-00140	52	03320-00140	84	03320-00140	161	04134-00303	22
03320-00140	52	03320-00140	90	03320-00140	162	04134-00303	28
03320-00140	53	03320-00140	90	03320-00140	162	04134-00303	29
03320-00140	53	03320-00140	90	03320-00140	163	04134-00303	33
03320-00140	53	03320-00140	96	03320-00140	163	04134-00303	40
03320-00140	54	03320-00140	96	03320-00140	164	04134-00303	46
03320-00140	54	03320-00140	96	03320-00140	164	04134-00303	47
03320-00140	54	03320-00140	104	03320-00140	165	04134-00303	52
03320-00140	55	03320-00140	105	03320-00140	165	04134-00303	53
03320-00140	55	03320-00140	106	03320-00140	166	04134-00303	53
03320-00140	55	03320-00140	107	03320-00140	166	04134-00303	54
03320-00140	58	03320-00140	108	03320-00140	168	04134-00303	55
03320-00140	58	03320-00140	109	03320-00140	168	04134-00303	55
03320-00140	59	03320-00140	109	03320-00140	169	04134-00303	58
03320-00140	59	03320-00140	114	03320-00140	169	04134-00303	59
03320-00140	60	03320-00140	118	03320-00140	170	04134-00303	64
03320-00140	61	03320-00140	119	03320-00140	170	04134-00303	65
03320-00140	62	03320-00140	120	03320-00140	171	04134-00303	65
03320-00140	63	03320-00140	121	03320-00140	171	04134-00303	66
03320-00140	64	03320-00140	122	03320-00140	172	04134-00303	67
03320-00140	64	03320-00140	123	03320-00140	172	04134-00303	67
03320-00140	64	03320-00140	123	03320-00140	179	04134-00303	71
03320-00140	65	03320-00140	128	03320-00140	179	04134-00303	72
03320-00140	65	03320-00140	130	03320-00140	180	04134-00303	73
03320-00140	65	03320-00140	130	03320-00140	180	04134-00303	74
03320-00140	66	03320-00140	131	03320-00140	181	04134-00303	81
03320-00140	66	03320-00140	131	03320-00140	181	04134-00303	82
03320-00140	66	03320-00140	132	03320-00140	182	04134-00303	83
03320-00140	67	03320-00140	132	03320-00140	182	04134-00303	84
03320-00140	67	03320-00140	133	03320-00140	183	04134-00303	90
03320-00140	67	03320-00140	133	03320-00140	183	04134-00303	96
03320-00140	71	03320-00140	134	03320-00141	73	04134-00303	104
03320-00140	71	03320-00140	134	03320-00141	74	04134-00303	105
03320-00140	71	03320-00140	135	03320-00141	83	04134-00303	106
03320-00140	72	03320-00140	135	03320-00141	84	04134-00303	107
03320-00140	72	03320-00140	136	03320-00200	45	04134-00303	108
03320-00140	72	03320-00140	136	03320-00200	57	04134-00303	109
03320-00140	73	03320-00140	138	03320-00400	35	04134-00303	114
03320-00140	73	03320-00140	138	03320-00400	42	04134-00303	118
03320-00140	73	03320-00140	139	03320-00400	70	04134-00303	119
03320-00140	73	03320-00140	139	03320-00400	89	04134-00303	120
03320-00140	74	03320-00140	140	03350-00350	32	04134-00303	121
03320-00140	74	03320-00140	140	03350-00350	39	04134-00303	122
03320-00140	74	03320-00140	141	03350-00400	2	04134-00303	123
03320-00140	74	03320-00140	141	03350-00400	10	04134-00303	128
03320-00140	74	03320-00140	142	03350-00400	18	04134-20303	33
03320-00140	81	03320-00140	142	03350-00400	25	04134-20303	40
03320-00140	81	03320-00140	149	03350-00850	35	04135-00303	61
03320-00140	81	03320-00140	149	03350-00850	42	04135-00303	74
03320-00140	82	03320-00140	150	03350-00850	70	04135-00303	84
03320-00140	82	03320-00140	150	03350-00850	89	04137-00303	47

PARTS NUMBER INDEX

Part No.	Fig.No.	Part No.	Fig.No.	Part No.	Fig.No.	Part No.	Fig.No.
04137-00303	49	04139-00303	66	04601-33097	149	04601-33190	169
04137-00303	50	04139-00303	66	04601-33097	150	04601-33190	170
04137-00303	51	04139-00303	67	04601-33097	151	04601-33190	179
04137-00303	51	04139-00303	74	04601-33116	181	04601-33190	180
04137-00303	54	04139-00303	84	04601-33119	149	04601-33190	181
04137-00303	55	04150-00202	3	04601-33119	150	04601-33192	149
04137-00303	59	04150-00202	4	04601-33119	151	04601-33192	150
04137-00303	62	04150-00202	11	04601-33138	179	04601-33192	151
04137-00303	63	04150-00202	12	04601-33138	180	04601-33195	138
04137-00303	63	04150-00202	19	04601-33138	181	04601-33195	139
04137-00303	66	04150-00202	26	04601-33141	149	04601-33195	140
04137-00303	67	04150-00303	21	04601-33141	150	04601-33200	168
04137-00303	72	04150-00303	22	04601-33141	151	04601-33200	169
04137-00303	74	04150-00303	28	04601-33154	179	04601-33200	170
04137-00303	82	04150-00303	29	04601-33154	180	04601-33202	179
04137-00303	84	04150-00303	33	04601-33154	181	04601-33202	180
04137-00303	105	04150-00303	36	04601-33157	149	04601-33202	181
04137-00303	109	04150-00303	37	04601-33157	150	04601-33204	149
04137-00303	119	04150-00303	40	04601-33157	151	04601-33204	150
04137-00303	123	04150-00303	43	04601-33163	130	04601-33204	151
04138-00303	47	04150-00303	46	04601-33163	131	04601-33205	138
04138-00303	49	04150-00303	47	04601-33163	132	04601-33205	139
04138-00303	51	04150-00303	52	04601-33163	133	04601-33205	140
04138-00303	53	04150-00303	54	04601-33163	134	04601-33210	138
04138-00303	55	04150-00303	58	04601-33163	135	04601-33210	139
04138-00303	59	04150-00303	59	04601-33163	136	04601-33210	140
04138-00303	61	04150-00303	64	04601-33163	160	04601-33210	168
04138-00303	63	04150-00303	66	04601-33163	161	04601-33210	169
04138-00303	63	04150-00303	71	04601-33163	162	04601-33210	170
04138-00303	65	04150-00303	72	04601-33163	163	04601-33212	130
04138-00303	67	04150-00303	73	04601-33163	164	04601-33212	131
04138-00303	72	04150-00303	74	04601-33163	165	04601-33212	132
04138-00303	72	04150-00303	81	04601-33163	166	04601-33212	133
04138-00303	74	04150-00303	82	04601-33170	138	04601-33212	134
04138-00303	74	04150-00303	83	04601-33170	139	04601-33212	135
04138-00303	82	04150-00303	84	04601-33170	140	04601-33212	136
04138-00303	82	04150-00303	90	04601-33175	168	04601-33212	160
04138-00303	84	04150-00303	96	04601-33175	169	04601-33212	161
04138-00303	84	04150-10303	21	04601-33175	170	04601-33212	162
04138-00303	105	04150-10303	22	04601-33180	149	04601-33212	163
04138-00303	107	04150-10303	28	04601-33180	150	04601-33212	164
04138-00303	109	04150-10303	29	04601-33180	151	04601-33212	165
04138-00303	119	04150-10303	46	04601-33185	138	04601-33212	166
04138-00303	121	04150-10303	47	04601-33185	139	04601-33214	179
04138-00303	123	04150-10303	52	04601-33185	140	04601-33214	180
04138-00303	137	04150-10303	54	04601-33187	130	04601-33214	181
04138-00303	143	04150-10303	58	04601-33187	131	04601-33215	168
04138-00303	154	04150-10303	59	04601-33187	132	04601-33215	169
04138-00303	167	04150-10303	64	04601-33187	133	04601-33215	170
04138-00303	173	04150-10303	66	04601-33187	134	04601-33216	149
04138-00303	184	04150-10303	73	04601-33187	135	04601-33216	150
04139-00303	50	04150-10303	83	04601-33187	136	04601-33216	151
04139-00303	51	04150-20303	33	04601-33187	160	04601-33219	149
04139-00303	52	04150-20303	40	04601-33187	161	04601-33219	150
04139-00303	54	04150-20303	43	04601-33187	162	04601-33219	151
04139-00303	54	04451-03050	133	04601-33187	163	04601-33220	138
04139-00303	55	04451-03050	163	04601-33187	164	04601-33220	139
04139-00303	62	04601-33094	179	04601-33187	165	04601-33220	140
04139-00303	63	04601-33094	180	04601-33187	166	04601-33225	168
04139-00303	64	04601-33094	181	04601-33190	168	04601-33225	169

PARTS NUMBER INDEX

Part No.	Fig.No.	Part No.	Fig.No.	Part No.	Fig.No.	Part No.	Fig.No.
04601-33225	170	04601-33245	139	04601-33265	170	04601-33294	180
04601-33229	149	04601-33245	140	04601-33266	179	04601-33294	181
04601-33229	150	04601-33246	149	04601-33266	180	04601-33295	149
04601-33229	151	04601-33246	150	04601-33266	181	04601-33295	150
04601-33229	179	04601-33246	151	04601-33270	168	04601-33295	151
04601-33229	180	04601-33249	179	04601-33270	169	04601-33295	168
04601-33229	181	04601-33249	180	04601-33270	170	04601-33295	169
04601-33230	179	04601-33249	181	04601-33271	149	04601-33295	170
04601-33230	180	04601-33250	168	04601-33271	150	04601-33297	149
04601-33230	181	04601-33250	169	04601-33271	151	04601-33297	150
04601-33231	130	04601-33250	170	04601-33273	179	04601-33297	151
04601-33231	131	04601-33252	149	04601-33273	180	04601-33305	138
04601-33231	132	04601-33252	150	04601-33273	181	04601-33305	139
04601-33231	133	04601-33252	151	04601-33276	179	04601-33305	140
04601-33231	134	04601-33253	179	04601-33276	180	04601-33306	179
04601-33231	135	04601-33253	180	04601-33276	181	04601-33306	180
04601-33231	136	04601-33253	181	04601-33280	138	04601-33306	181
04601-33231	160	04601-33254	179	04601-33280	139	04601-33307	149
04601-33231	161	04601-33254	180	04601-33280	140	04601-33307	150
04601-33231	162	04601-33254	181	04601-33285	130	04601-33307	151
04601-33231	163	04601-33255	138	04601-33285	131	04601-33309	179
04601-33231	164	04601-33255	138	04601-33285	132	04601-33309	180
04601-33231	165	04601-33255	139	04601-33285	133	04601-33309	181
04601-33231	166	04601-33255	139	04601-33285	134	04601-33310	130
04601-33235	138	04601-33255	140	04601-33285	135	04601-33310	131
04601-33235	138	04601-33255	140	04601-33285	136	04601-33310	132
04601-33235	139	04601-33260	138	04601-33285	160	04601-33310	133
04601-33235	139	04601-33260	139	04601-33285	161	04601-33310	134
04601-33235	140	04601-33260	140	04601-33285	162	04601-33310	135
04601-33235	140	04601-33260	168	04601-33285	163	04601-33310	136
04601-33236	130	04601-33260	168	04601-33285	164	04601-33310	160
04601-33236	131	04601-33260	169	04601-33285	165	04601-33310	161
04601-33236	132	04601-33260	169	04601-33285	166	04601-33310	162
04601-33236	133	04601-33260	170	04601-33285	168	04601-33310	163
04601-33236	134	04601-33260	170	04601-33285	169	04601-33310	164
04601-33236	135	04601-33261	130	04601-33285	170	04601-33310	165
04601-33236	136	04601-33261	131	04601-33286	149	04601-33310	166
04601-33236	160	04601-33261	132	04601-33286	150	04601-33310	168
04601-33236	161	04601-33261	133	04601-33286	151	04601-33310	169
04601-33236	162	04601-33261	134	04601-33287	179	04601-33310	170
04601-33236	163	04601-33261	135	04601-33287	180	04601-33313	149
04601-33236	164	04601-33261	136	04601-33287	181	04601-33313	150
04601-33236	165	04601-33261	160	04601-33290	130	04601-33313	151
04601-33236	166	04601-33261	161	04601-33290	131	04601-33314	149
04601-33239	179	04601-33261	162	04601-33290	132	04601-33314	150
04601-33239	180	04601-33261	163	04601-33290	133	04601-33314	151
04601-33239	181	04601-33261	164	04601-33290	134	04601-33315	138
04601-33240	168	04601-33261	165	04601-33290	135	04601-33315	139
04601-33240	168	04601-33261	166	04601-33290	136	04601-33315	140
04601-33240	169	04601-33265	138	04601-33290	138	04601-33316	179
04601-33240	169	04601-33265	139	04601-33290	139	04601-33316	179
04601-33240	170	04601-33265	140	04601-33290	140	04601-33316	180
04601-33240	170	04601-33265	149	04601-33290	160	04601-33316	180
04601-33241	149	04601-33265	149	04601-33290	161	04601-33316	181
04601-33241	150	04601-33265	150	04601-33290	162	04601-33320	168
04601-33241	151	04601-33265	150	04601-33290	163	04601-33320	169
04601-33243	149	04601-33265	151	04601-33290	164	04601-33320	170
04601-33243	150	04601-33265	151	04601-33290	165	04601-33321	179
04601-33243	151	04601-33265	168	04601-33290	166	04601-33321	180
04601-33245	138	04601-33265	169	04601-33294	179	04601-33321	181

PARTS NUMBER INDEX

Part No.	Fig.No.	Part No.	Fig.No.	Part No.	Fig.No.	Part No.	Fig.No.
04601-33323	149	04601-33347	149	04601-33442	133	04901-00100	97
04601-33323	150	04601-33347	150	04601-33442	134	04901-00100	102
04601-33323	151	04601-33347	151	04601-33442	135	04901-00100	112
04601-33325	130	04601-33350	179	04601-33442	136	04901-00100	116
04601-33325	131	04601-33350	180	04601-33442	160	04901-00100	126
04601-33325	132	04601-33350	181	04601-33442	161	04901-00160	1
04601-33325	133	04601-33358	179	04601-33442	162	04901-00160	9
04601-33325	134	04601-33358	180	04601-33442	163	04901-00160	17
04601-33325	135	04601-33358	181	04601-33442	164	04901-00160	24
04601-33325	136	04601-33360	138	04601-33442	165	04901-00160	34
04601-33325	160	04601-33360	139	04601-33442	166	04901-00160	41
04601-33325	161	04601-33360	140	04601-33466	130	04901-00160	44
04601-33325	162	04601-33365	168	04601-33466	131	04901-00160	56
04601-33325	163	04601-33365	169	04601-33466	132	04901-00160	68
04601-33325	164	04601-33365	170	04601-33466	133	04901-00160	69
04601-33325	165	04601-33368	130	04601-33466	134	04901-00160	79
04601-33325	166	04601-33368	131	04601-33466	135	04901-00160	80
04601-33325	179	04601-33368	132	04601-33466	136	04901-00160	87
04601-33325	180	04601-33368	133	04601-33466	160	04901-00160	88
04601-33325	181	04601-33368	134	04601-33466	161	04901-00160	94
04601-33329	130	04601-33368	135	04601-33466	162	04901-00160	95
04601-33329	131	04601-33368	136	04601-33466	163	04913-11100	144
04601-33329	132	04601-33368	160	04601-33466	164	04913-11100	145
04601-33329	133	04601-33368	161	04601-33466	165	04913-11100	145
04601-33329	134	04601-33368	162	04601-33466	166	04913-11100	148
04601-33329	135	04601-33368	163	04601-33526	130	04913-11100	148
04601-33329	136	04601-33368	164	04601-33526	131	04913-11100	148
04601-33329	160	04601-33368	165	04601-33526	132	04913-11100	155
04601-33329	161	04601-33368	166	04601-33526	133	04913-11100	156
04601-33329	162	04601-33393	130	04601-33526	134	04913-11100	156
04601-33329	163	04601-33393	131	04601-33526	135	04913-11100	159
04601-33329	164	04601-33393	132	04601-33526	136	04913-11100	159
04601-33329	165	04601-33393	133	04601-33526	160	04913-11100	174
04601-33329	166	04601-33393	134	04601-33526	161	04913-11100	175
04601-33332	179	04601-33393	135	04601-33526	162	04913-11100	175
04601-33332	180	04601-33393	136	04601-33526	163	04913-11100	178
04601-33332	181	04601-33393	160	04601-33526	164	04913-11100	178
04601-33334	130	04601-33393	161	04601-33526	165	04913-11100	178
04601-33334	131	04601-33393	162	04601-33526	166	04913-11100	185
04601-33334	132	04601-33393	163	04601-33576	130	04913-11100	186
04601-33334	133	04601-33393	164	04601-33576	131	04913-11100	186
04601-33334	134	04601-33393	165	04601-33576	132	04913-11100	189
04601-33334	135	04601-33393	166	04601-33576	133	04913-11100	189
04601-33334	136	04601-33417	130	04601-33576	134	04913-11300	137
04601-33334	160	04601-33417	131	04601-33576	135	04913-11300	143
04601-33334	161	04601-33417	132	04601-33576	136	04913-11300	154
04601-33334	162	04601-33417	133	04601-33576	160	04913-11300	167
04601-33334	163	04601-33417	134	04601-33576	161	04913-11300	173
04601-33334	164	04601-33417	135	04601-33576	162	04913-11300	184
04601-33334	165	04601-33417	136	04601-33576	163	04913-11380	145
04601-33334	166	04601-33417	160	04601-33576	164	04913-11380	145
04601-33335	138	04601-33417	161	04601-33576	165	04913-11380	145
04601-33335	139	04601-33417	162	04601-33576	166	04913-11380	145
04601-33335	140	04601-33417	163	04901-00100	31	04913-11380	146
04601-33339	149	04601-33417	164	04901-00100	34	04913-11380	146
04601-33339	150	04601-33417	165	04901-00100	38	04913-11380	146
04601-33339	151	04601-33417	166	04901-00100	41	04913-11380	147
04601-33340	168	04601-33442	130	04901-00100	77	04913-11380	147
04601-33340	169	04601-33442	131	04901-00100	85	04913-11380	147
04601-33340	170	04601-33442	132	04901-00100	92	04913-11380	148

PARTS NUMBER INDEX

Part No.	Fig.No.	Part No.	Fig.No.	Part No.	Fig.No.	Part No.	Fig.No.
04913-11380	156	09210-10300	5	214A8-11002	99	216G2-40602	178
04913-11380	156	09210-10300	9	214A8-12002	31	216G2-40602	185
04913-11380	156	09210-10300	9	214A8-12002	34	216G2-40602	186
04913-11380	156	09210-10300	13	214A8-12002	98	216G2-40602	186
04913-11380	157	09210-10300	13	214A8-12002	99	216G2-40602	187
04913-11380	157	09210-10300	17	214A8-12012	31	216G2-40602	187
04913-11380	157	09210-10300	17	214A8-12012	34	216G2-40602	188
04913-11380	158	09210-10300	24	214A8-12012	98	216G2-40602	188
04913-11380	158	09210-10300	24	214A8-12012	99	216G2-40602	189
04913-11380	158	09210-10300	31	214A8-12032	31	216G2-40602	189
04913-11380	159	09210-10300	31	214A8-12032	34	216G2-40611	144
04913-11380	175	09210-10300	34	214A8-12032	98	216G2-40611	145
04913-11380	175	09210-10300	34	214A8-12032	99	216G2-40611	146
04913-11380	175	09210-10300	38	214A8-42661	69	216G2-40611	146
04913-11380	175	09210-10300	38	214A8-42661	80	216G2-40611	147
04913-11380	176	09210-10300	41	214A8-42661	88	216G2-40611	147
04913-11380	176	09210-10300	41	214A8-42661	95	216G2-40611	148
04913-11380	176	09210-10300	44	214A8-46001	42	216G2-40611	148
04913-11380	177	09210-10300	56	214A8-52051	68	216G2-40611	155
04913-11380	177	09210-10300	68	214A8-52051	69	216G2-40611	156
04913-11380	177	09210-10300	69	214A8-52051	79	216G2-40611	157
04913-11380	178	09210-10300	79	214A8-52051	80	216G2-40611	157
04913-11380	186	09210-10300	80	214A8-52051	87	216G2-40611	158
04913-11380	186	09210-10300	87	214A8-52051	88	216G2-40611	158
04913-11380	186	09210-10300	87	214A8-52051	94	216G2-40611	159
04913-11380	186	09210-10300	88	214A8-52051	95	216G2-40611	159
04913-11380	187	09210-10300	88	214J8-11002	38	216G2-40611	174
04913-11380	187	09210-10300	94	214J8-11002	41	216G2-40611	175
04913-11380	187	09210-10300	94	214J8-11002	100	216G2-40611	176
04913-11380	188	09210-10300	95	214J8-11002	101	216G2-40611	176
04913-11380	188	09210-10300	95	216G2-40602	144	216G2-40611	177
04913-11380	188	09210-10300	98	216G2-40602	145	216G2-40611	177
04913-11380	189	09210-10300	99	216G2-40602	145	216G2-40611	178
09192-30044	92	09210-10300	100	216G2-40602	146	216G2-40611	178
09192-30044	97	09210-10300	101	216G2-40602	146	216G2-40611	185
09201-06201	5	214A7-42181	1	216G2-40602	146	216G2-40611	186
09201-06201	13	214A7-42181	5	216G2-40602	147	216G2-40611	187
09201-06201	17	214A7-42181	9	216G2-40602	147	216G2-40611	187
09201-06201	24	214A7-42181	13	216G2-40602	147	216G2-40611	188
09201-06201	31	214A7-42181	17	216G2-40602	148	216G2-40611	188
09201-06201	34	214A7-42181	24	216G2-40602	148	216G2-40611	189
09201-06201	38	214A7-42181	31	216G2-40602	155	216G2-40611	189
09201-06201	41	214A7-42181	34	216G2-40602	156	216G2-40701	144
09201-06201	44	214A7-42181	38	216G2-40602	156	216G2-40701	145
09201-06201	56	214A7-42181	41	216G2-40602	157	216G2-40701	145
09201-06201	68	214A7-42181	68	216G2-40602	157	216G2-40701	146
09201-06201	69	214A7-42181	69	216G2-40602	158	216G2-40701	146
09201-06201	79	214A7-42181	79	216G2-40602	158	216G2-40701	146
09201-06201	80	214A7-42181	80	216G2-40602	159	216G2-40701	147
09201-06201	87	214A7-42181	87	216G2-40602	159	216G2-40701	147
09201-06201	88	214A7-42181	88	216G2-40602	174	216G2-40701	147
09201-06201	94	214A7-42181	94	216G2-40602	175	216G2-40701	148
09201-06201	95	214A7-42181	95	216G2-40602	175	216G2-40701	148
09201-06201	98	214A7-42181	98	216G2-40602	176	216G2-40701	155
09201-06201	99	214A7-42181	99	216G2-40602	176	216G2-40701	156
09201-06201	100	214A7-42181	100	216G2-40602	176	216G2-40701	156
09201-06201	101	214A7-42181	101	216G2-40602	177	216G2-40701	157
09210-10300	1	214A8-11002	31	216G2-40602	177	216G2-40701	157
09210-10300	1	214A8-11002	34	216G2-40602	177	216G2-40701	158
09210-10300	5	214A8-11002	98	216G2-40602	178	216G2-40701	158

PARTS NUMBER INDEX

Part No.	Fig.No.	Part No.	Fig.No.	Part No.	Fig.No.	Part No.	Fig.No.
216G2-40701	159	216G2-40721	148	22198-42611	45	22553-12031	18
216G2-40701	159	216G2-40721	148	22199-12401	1	22553-12031	25
216G2-40701	174	216G2-40721	155	22199-12401	9	22658-52081	32
216G2-40701	175	216G2-40721	156	22199-12401	17	22658-52081	39
216G2-40701	175	216G2-40721	157	22199-12401	24	22678-23751	1
216G2-40701	176	216G2-40721	157	22199-12401	31	22678-23751	9
216G2-40701	176	216G2-40721	158	22199-12401	34	22678-23751	17
216G2-40701	176	216G2-40721	158	22199-12401	38	22678-23751	24
216G2-40701	177	216G2-40721	159	22199-12401	41	22678-52101	35
216G2-40701	177	216G2-40721	159	224T8-46001	32	22678-52101	42
216G2-40701	177	216G2-40721	174	224T8-46001	39	22678-52101	45
216G2-40701	178	216G2-40721	175	22438-52101	35	23238-40141	45
216G2-40701	178	216G2-40721	176	22438-52111	35	23238-40141	57
216G2-40701	185	216G2-40721	176	22438-59821	35	23308-22061	44
216G2-40701	186	216G2-40721	177	22438-59821	42	23308-22061	56
216G2-40701	186	216G2-40721	177	22438-59821	45	234A8-22202	1
216G2-40701	187	216G2-40721	178	22439-43711	45	234A8-22202	5
216G2-40701	187	216G2-40721	178	22439-43711	57	234F8-22101	9
216G2-40701	188	216G2-40721	185	22518-40151	78	234F8-22101	13
216G2-40701	188	216G2-40721	186	22518-40151	93	234F8-22111	9
216G2-40701	189	216G2-40721	187	22518-40151	103	234F8-22111	13
216G2-40701	189	216G2-40721	187	22518-40151	113	234F8-22121	9
216G2-40711	144	216G2-40721	188	22518-40151	117	234F8-22121	13
216G2-40711	145	216G2-40721	188	22518-40151	127	234F8-22201	9
216G2-40711	146	216G2-40721	189	22548-34031	1	234F8-22201	13
216G2-40711	146	216G2-40721	189	22548-34031	9	23458-32052	1
216G2-40711	147	216G2-40731	144	22548-34031	17	23458-32052	9
216G2-40711	147	216G2-40731	145	22548-34031	24	23458-32052	17
216G2-40711	148	216G2-40731	146	22548-34031	31	23458-32052	24
216G2-40711	148	216G2-40731	146	22548-34031	34	23458-32052	31
216G2-40711	155	216G2-40731	147	22548-34031	38	23458-32052	34
216G2-40711	156	216G2-40731	147	22548-34031	41	23458-32052	38
216G2-40711	157	216G2-40731	148	22548-34031	92	23458-32052	41
216G2-40711	157	216G2-40731	148	22548-34031	97	23458-32052	92
216G2-40711	158	216G2-40731	155	22548-34031	112	23458-32052	97
216G2-40711	158	216G2-40731	156	22548-34031	126	23458-32052	112
216G2-40711	159	216G2-40731	157	22548-34051	1	23458-32052	126
216G2-40711	159	216G2-40731	157	22548-34051	9	23460-53171	32
216G2-40711	174	216G2-40731	158	22548-34051	17	23460-53171	39
216G2-40711	175	216G2-40731	158	22548-34051	24	23648-50161	31
216G2-40711	176	216G2-40731	159	22548-34051	31	23648-50161	38
216G2-40711	176	216G2-40731	159	22548-34051	34	23650-52841	57
216G2-40711	177	216G2-40731	174	22548-34051	38	23650-52851	57
216G2-40711	177	216G2-40731	175	22548-34051	41	23650-52861	57
216G2-40711	178	216G2-40731	176	22548-34051	92	23650-52871	57
216G2-40711	178	216G2-40731	176	22548-34051	97	23650-83581	45
216G2-40711	185	216G2-40731	177	22548-34051	112	23659-42161	1
216G2-40711	186	216G2-40731	177	22548-34051	126	23659-42161	5
216G2-40711	187	216G2-40731	178	22548-34061	1	23816-10561	32
216G2-40711	187	216G2-40731	178	22548-34061	9	23816-10561	39
216G2-40711	188	216G2-40731	185	22548-34061	17	23870-52871	48
216G2-40711	188	216G2-40731	186	22548-34061	24	23870-52871	49
216G2-40711	189	216G2-40731	187	22548-34061	31	23870-52871	60
216G2-40711	189	216G2-40731	187	22548-34061	34	23870-52871	61
216G2-40721	144	216G2-40731	188	22548-34061	38	23870-52871	75
216G2-40721	145	216G2-40731	188	22548-34061	41	23870-52871	78
216G2-40721	146	216G2-40731	189	22548-34061	92	23870-52871	91
216G2-40721	146	216G2-40731	189	22548-34061	97	23870-52871	93
216G2-40721	147	22198-42611	35	22548-34061	112	23870-52871	103
216G2-40721	147	22198-42611	42	22548-34061	126	23870-52871	113

PARTS NUMBER INDEX

Part No.	Fig.No.	Part No.	Fig.No.	Part No.	Fig.No.	Part No.	Fig.No.
23870-52871	117	23917-42191	140	25178-52041	41	27262-42091	170
23870-52871	127	23917-42191	149	25594-52371	2	27262-42091	171
239A2-42221	144	23917-42191	149	25594-52371	10	27262-42091	172
239A2-42221	145	23917-42191	150	25594-52381	2	273A8-99802	18
239A2-42221	145	23917-42191	150	25594-52381	10	273A8-99802	25
239A2-42221	148	23917-42191	151	25594-52391	2	27419-12072	17
239A2-42221	148	23917-42191	151	25594-52391	10	27419-12072	24
239A2-42221	148	23917-42191	168	25594-52411	2	27419-12072	31
239A2-42221	155	23917-42191	169	25594-52411	10	27419-12072	34
239A2-42221	156	23917-42191	170	256A8-42081	25	27419-12072	38
239A2-42221	156	23917-42191	179	256A8-42091	18	27419-12072	41
239A2-42221	159	23917-42191	179	256A8-42091	25	27419-12072	44
239A2-42221	159	23917-42191	180	256C8-42081	18	27419-12072	56
239A2-42221	174	23917-42191	180	256C8-42081	25	27419-12072	68
239A2-42221	175	23917-42191	181	25788-52052	32	27419-12072	69
239A2-42221	175	23917-42191	181	25788-52052	39	27419-12072	79
239A2-42221	178	24238-42031	45	25788-52151	32	27419-12072	80
239A2-42221	178	24238-42031	57	25788-52151	39	27419-12072	87
239A2-42221	178	24238-52051	31	25788-59805	32	27419-12072	88
239A2-42221	185	24238-52051	38	25808-43111	35	27419-12072	94
239A2-42221	186	24320-56871	35	25808-43111	42	27419-12072	95
239A2-42221	186	24328-52201	32	25808-43111	70	277P8-22051	1
239A2-42221	189	24328-52201	39	25808-43111	89	277P8-22051	1
239A2-42221	189	24328-52211	32	25808-43121	35	277P8-22051	9
239A5-12501	144	24328-52211	39	25808-43121	42	277P8-22051	9
239A5-12501	145	24328-52221	32	25808-43121	70	277P8-22051	17
239A5-12501	145	24328-52221	39	25808-43121	89	277P8-22051	17
239A5-12501	155	24329-45541	78	25818-52081	32	277P8-22051	24
239A5-12501	156	24329-45541	93	25818-52081	39	277P8-22051	24
239A5-12501	156	24329-45541	103	25818-99802	35	277P8-22051	31
239A5-12501	174	24329-45541	113	25818-99802	42	277P8-22051	34
239A5-12501	175	24329-45541	117	25958-52201	70	277P8-22051	34
239A5-12501	175	24329-45541	127	25958-52201	89	277P8-22051	38
239A5-12501	185	24388-52031	31	25958-52211	70	277P8-22051	41
239A5-12501	186	24388-52031	38	25958-52211	89	277P8-22051	92
239A5-12501	186	24388-52061	32	25958-52221	70	277P8-22051	97
239A5-12521	144	24388-52061	39	25958-52221	89	277P8-22051	112
239A5-12521	145	24450-92021	9	27132-40181	47	277P8-22051	126
239A5-12521	145	24450-92021	13	27132-40181	49	277P8-22061	1
239A5-12521	155	24469-42701	70	27132-40181	51	277P8-22061	9
239A5-12521	156	24469-42701	89	27132-40181	53	277P8-22061	17
239A5-12521	156	24608-52401	35	27132-40181	55	277P8-22061	24
239A5-12521	174	24608-52401	42	27132-40181	59	277P8-22061	31
239A5-12521	175	25073-00031	77	27132-40181	61	277P8-22061	34
239A5-12521	175	25073-00031	85	27132-40181	63	277P8-22061	38
239A5-12521	185	25073-00031	92	27132-40181	65	277P8-22061	41
239A5-12521	186	25073-00031	97	27132-40181	67	277P8-22061	92
239A5-12521	186	25073-00031	102	27132-40181	138	277P8-22061	97
239A8-20101	1	25073-00031	112	27132-40181	139	277P8-22061	112
239A8-20101	5	25073-00031	116	27132-40181	140	277P8-22061	126
239A8-20111	1	25073-00031	126	27132-40181	168	277P8-22071	1
239A8-20111	5	25176-12361	31	27132-40181	169	277P8-22071	9
239A8-20121	1	25176-12361	31	27132-40181	170	277P8-22071	17
239A8-20121	5	25176-12361	34	27262-42091	33	277P8-22071	24
239A8-20131	1	25176-12361	38	27262-42091	40	277P8-22071	31
239A8-20131	5	25176-12361	38	27262-42091	139	277P8-22071	34
239A8-20141	1	25176-12361	41	27262-42091	140	277P8-22071	38
239A8-20141	5	25178-52041	32	27262-42091	141	277P8-22071	41
23917-42191	138	25178-52041	34	27262-42091	142	277P8-22071	92
23917-42191	139	25178-52041	39	27262-42091	169	277P8-22071	97

PARTS NUMBER INDEX

Part No.	Fig.No.	Part No.	Fig.No.	Part No.	Fig.No.	Part No.	Fig.No.
277P8-22071	112	27730-62481	169	27838-52101	57	514A3-82301	68
277P8-22071	126	27730-62481	169	27948-52001	2	514A3-82301	68
277P8-22081	1	27730-62481	170	27948-52001	10	514A3-82301	69
277P8-22081	9	27730-62481	170	27978-52211	2	514A3-82301	69
277P8-22081	17	27730-62491	138	27978-52211	10	514A3-82301	79
277P8-22081	24	27730-62491	138	29568-52041	18	514A3-82301	79
277P8-22081	31	27730-62491	138	29568-52041	25	514A3-82301	80
277P8-22081	34	27730-62491	138	29568-52051	18	514A3-82301	80
277P8-22081	38	27730-62491	139	29568-52051	25	514A3-82301	87
277P8-22081	41	27730-62491	139	29568-52081	18	514A3-82301	87
277P8-22081	92	27730-62491	139	29568-52081	25	514A3-82301	88
277P8-22081	97	27730-62491	139	29568-52091	18	514A3-82301	88
277P8-22081	112	27730-62491	140	29568-52091	25	514A3-82301	94
277P8-22081	126	27730-62491	140	50226-29111	47	514A3-82301	94
27718-22491	31	27730-62491	140	50226-29111	49	514A3-82301	95
27718-22491	38	27730-62491	140	50226-29111	51	514A3-82301	95
27730-62431	138	27730-62491	168	50226-29111	53	514A3-82301	98
27730-62431	138	27730-62491	168	50226-29111	55	514A3-82301	98
27730-62431	139	27730-62491	168	50226-29111	59	514A3-82301	99
27730-62431	139	27730-62491	168	50226-29111	61	514A3-82301	99
27730-62431	140	27730-62491	169	50226-29111	63	514A3-82301	100
27730-62431	140	27730-62491	169	50226-29111	65	514A3-82301	100
27730-62431	168	27730-62491	169	50226-29111	67	514A3-82301	101
27730-62431	168	27730-62491	169	50226-29111	72	514A3-82301	101
27730-62431	169	27730-62491	170	50226-29111	72	514A3-82321	1
27730-62431	169	27730-62491	170	50226-29111	74	514A3-82321	5
27730-62431	170	27730-62491	170	50226-29111	74	514A3-82321	9
27730-62431	170	27730-62491	170	50226-29111	82	514A3-82321	13
27730-62451	138	27732-42221	145	50226-29111	82	514A3-82321	17
27730-62451	139	27732-42221	145	50226-29111	84	514A3-82321	24
27730-62451	140	27732-42221	146	50226-29111	84	514A3-82321	31
27730-62451	168	27732-42221	146	50226-29111	105	514A3-82321	34
27730-62451	169	27732-42221	147	50226-29111	107	514A3-82321	38
27730-62451	170	27732-42221	147	50226-29111	109	514A3-82321	41
27730-62461	138	27732-42221	148	50226-29111	119	514A3-82321	44
27730-62461	138	27732-42221	156	50226-29111	121	514A3-82321	56
27730-62461	139	27732-42221	156	50226-29111	123	514A3-82321	68
27730-62461	139	27732-42221	157	514A3-71702	1	514A3-82321	69
27730-62461	140	27732-42221	157	514A3-71702	9	514A3-82321	79
27730-62461	140	27732-42221	158	514A3-71702	31	514A3-82321	80
27730-62461	168	27732-42221	158	514A3-71702	34	514A3-82321	87
27730-62461	168	27732-42221	159	514A3-71702	38	514A3-82321	88
27730-62461	169	27732-42221	175	514A3-71702	41	514A3-82321	94
27730-62461	169	27732-42221	175	514A3-82301	1	514A3-82321	95
27730-62461	170	27732-42221	176	514A3-82301	5	514A3-82321	98
27730-62461	170	27732-42221	176	514A3-82301	9	514A3-82321	99
27730-62471	138	27732-42221	177	514A3-82301	13	514A3-82321	100
27730-62471	139	27732-42221	177	514A3-82301	17	514A3-82321	101
27730-62471	140	27732-42221	178	514A3-82301	17	514A3-82331	1
27730-62471	168	27732-42221	186	514A3-82301	24	514A3-82331	5
27730-62471	169	27732-42221	186	514A3-82301	31	514A3-82331	9
27730-62471	170	27732-42221	187	514A3-82301	31	514A3-82331	13
27730-62481	138	27732-42221	187	514A3-82301	34	514A3-82331	17
27730-62481	138	27732-42221	188	514A3-82301	34	514A3-82331	24
27730-62481	139	27732-42221	188	514A3-82301	38	514A3-82331	31
27730-62481	139	27732-42221	189	514A3-82301	41	514A3-82331	34
27730-62481	140	27738-52091	2	514A3-82301	44	514A3-82331	38
27730-62481	140	27738-52091	10	514A3-82301	44	514A3-82331	41
27730-62481	168	27738-52091	18	514A3-82301	56	514A3-82331	44
27730-62481	168	27738-52091	25	514A3-82301	56	514A3-82331	56

PARTS NUMBER INDEX

Part No.	Fig.No.	Part No.	Fig.No.	Part No.	Fig.No.	Part No.	Fig.No.
514A3-82331	68	514A3-82361	1	514A3-82381	68	52519-80461	56
514A3-82331	69	514A3-82361	5	514A3-82381	69	52759-32072	98
514A3-82331	79	514A3-82361	9	514A3-82381	79	52759-32072	99
514A3-82331	80	514A3-82361	13	514A3-82381	80	53110-12041	109
514A3-82331	87	514A3-82361	17	514A3-82381	87	53110-12041	123
514A3-82331	88	514A3-82361	24	514A3-82381	88	53110-12121	50
514A3-82331	94	514A3-82361	31	514A3-82381	94	53110-12121	51
514A3-82331	95	514A3-82361	34	514A3-82381	95	53110-12121	52
514A3-82331	98	514A3-82361	38	514A3-82381	98	53110-12121	53
514A3-82331	99	514A3-82361	41	514A3-82381	99	53110-12121	53
514A3-82331	100	514A3-82361	44	514A3-82381	100	53110-12121	54
514A3-82331	101	514A3-82361	56	514A3-82381	101	53110-12121	54
514A3-82341	1	514A3-82361	68	514A3-82391	1	53110-12121	55
514A3-82341	5	514A3-82361	69	514A3-82391	5	53110-12121	55
514A3-82341	9	514A3-82361	79	514A3-82391	9	53110-12121	55
514A3-82341	13	514A3-82361	80	514A3-82391	13	53110-12121	62
514A3-82341	17	514A3-82361	87	514A3-82391	17	53110-12121	63
514A3-82341	24	514A3-82361	88	514A3-82391	24	53110-12121	64
514A3-82341	31	514A3-82361	94	514A3-82391	31	53110-12121	65
514A3-82341	34	514A3-82361	95	514A3-82391	34	53110-12121	65
514A3-82341	38	514A3-82361	98	514A3-82391	38	53110-12121	66
514A3-82341	41	514A3-82361	99	514A3-82391	41	53110-12121	66
514A3-82341	44	514A3-82361	100	514A3-82391	44	53110-12121	67
514A3-82341	56	514A3-82361	101	514A3-82391	56	53110-12121	67
514A3-82341	68	514A3-82371	1	514A3-82391	68	53110-12121	67
514A3-82341	69	514A3-82371	5	514A3-82391	69	53110-12121	72
514A3-82341	79	514A3-82371	9	514A3-82391	79	53110-12121	82
514A3-82341	80	514A3-82371	13	514A3-82391	80	53110-12121	137
514A3-82341	87	514A3-82371	17	514A3-82391	87	53110-12121	143
514A3-82341	88	514A3-82371	24	514A3-82391	88	53110-12121	154
514A3-82341	94	514A3-82371	31	514A3-82391	94	53110-12121	167
514A3-82341	95	514A3-82371	34	514A3-82391	95	53110-12121	173
514A3-82341	98	514A3-82371	38	514A3-82391	98	53110-12121	184
514A3-82341	99	514A3-82371	41	514A3-82391	99	53110-12131	50
514A3-82341	100	514A3-82371	44	514A3-82391	100	53110-12131	51
514A3-82341	101	514A3-82371	56	514A3-82391	101	53110-12131	52
514A3-82351	1	514A3-82371	68	52356-20082	56	53110-12131	53
514A3-82351	5	514A3-82371	69	524T3-84031	5	53110-12131	53
514A3-82351	9	514A3-82371	79	524T3-84031	13	53110-12131	54
514A3-82351	13	514A3-82371	80	524T3-84031	17	53110-12131	54
514A3-82351	17	514A3-82371	87	524T3-84031	24	53110-12131	55
514A3-82351	24	514A3-82371	88	524T3-84031	31	53110-12131	55
514A3-82351	31	514A3-82371	94	524T3-84031	34	53110-12131	55
514A3-82351	34	514A3-82371	95	524T3-84031	38	53110-12131	62
514A3-82351	38	514A3-82371	98	524T3-84031	41	53110-12131	63
514A3-82351	41	514A3-82371	99	524T3-84031	44	53110-12131	64
514A3-82351	44	514A3-82371	100	524T3-84031	56	53110-12131	65
514A3-82351	56	514A3-82371	101	524T3-84031	68	53110-12131	65
514A3-82351	68	514A3-82381	1	524T3-84031	69	53110-12131	66
514A3-82351	69	514A3-82381	5	524T3-84031	79	53110-12131	66
514A3-82351	79	514A3-82381	9	524T3-84031	80	53110-12131	67
514A3-82351	80	514A3-82381	13	524T3-84031	87	53110-12131	67
514A3-82351	87	514A3-82381	17	524T3-84031	88	53110-12131	67
514A3-82351	88	514A3-82381	24	524T3-84031	94	53110-12131	72
514A3-82351	94	514A3-82381	31	524T3-84031	95	53110-12131	74
514A3-82351	95	514A3-82381	34	524T3-84031	98	53110-12131	74
514A3-82351	98	514A3-82381	38	524T3-84031	99	53110-12131	82
514A3-82351	99	514A3-82381	41	524T3-84031	100	53110-12131	84
514A3-82351	100	514A3-82381	44	524T3-84031	101	53110-12131	84
514A3-82351	101	514A3-82381	56	52516-80461	44	53110-12131	107

PARTS NUMBER INDEX

Part No.	Fig.No.	Part No.	Fig.No.	Part No.	Fig.No.	Part No.	Fig.No.
53110-12131	121	534A9-22001	186	534A9-22211	157	53819-32022	101
53110-12341	135	534A9-22001	187	534A9-22211	157	539A5-12011	148
53110-12341	136	534A9-22001	187	534A9-22211	158	539A5-12011	148
53110-12341	165	534A9-22011	145	534A9-22211	158	539A5-12011	148
53110-12341	166	534A9-22011	145	534A9-22211	159	539A5-12011	159
53110-12491	20	534A9-22011	146	534A9-22211	175	539A5-12011	159
53110-12491	27	534A9-22011	146	534A9-22211	175	539A5-12011	178
534A1-64402	1	534A9-22011	156	534A9-22211	176	539A5-12011	178
534A1-64412	1	534A9-22011	156	534A9-22211	176	539A5-12011	178
534A2-74001	1	534A9-22011	157	534A9-22211	177	539A5-12011	189
534A2-74001	5	534A9-22011	157	534A9-22211	177	539A5-12011	189
534A2-74051	1	534A9-22011	175	534A9-22211	178	539A5-12041	148
534A2-74051	5	534A9-22011	175	534A9-22211	186	539A5-12041	148
534A2-74051	13	534A9-22011	176	534A9-22211	186	539A5-12041	148
534A2-74301	1	534A9-22011	176	534A9-22211	187	539A5-12041	159
534A2-74301	5	534A9-22011	186	534A9-22211	187	539A5-12041	159
534A2-74301	9	534A9-22011	186	534A9-22211	188	539A5-12041	178
534A2-74301	13	534A9-22011	187	534A9-22211	188	539A5-12041	178
534A2-74501	9	534A9-22011	187	534A9-22211	189	539A5-12041	178
534A4-22001	147	534A9-22101	146	534A9-22301	145	539A5-12041	189
534A4-22001	147	534A9-22101	157	534A9-22301	145	539A5-12041	189
534A4-22001	148	534A9-22101	176	534A9-22301	145	55787-22061	149
534A4-22001	158	534A9-22101	187	534A9-22301	145	55787-22061	150
534A4-22001	158	534A9-22201	145	534A9-22301	146	55787-22061	151
534A4-22001	159	534A9-22201	145	534A9-22301	146	55787-22061	179
534A4-22001	177	534A9-22201	146	534A9-22301	147	55787-22061	180
534A4-22001	177	534A9-22201	146	534A9-22301	147	55787-22061	181
534A4-22001	178	534A9-22201	147	534A9-22301	148	577P3-74001	1
534A4-22001	188	534A9-22201	147	534A9-22301	156	577P3-74001	1
534A4-22001	188	534A9-22201	148	534A9-22301	156	577P3-74001	9
534A4-22001	189	534A9-22201	156	534A9-22301	156	577P3-74001	9
534A4-22011	147	534A9-22201	156	534A9-22301	156	577P3-74001	31
534A4-22011	147	534A9-22201	157	534A9-22301	157	577P3-74001	34
534A4-22011	148	534A9-22201	157	534A9-22301	157	577P3-74001	34
534A4-22011	158	534A9-22201	158	534A9-22301	158	577P3-74001	38
534A4-22011	158	534A9-22201	158	534A9-22301	158	577P3-74001	41
534A4-22011	159	534A9-22201	159	534A9-22301	159	577P3-74011	1
534A4-22011	177	534A9-22201	175	534A9-22301	175	577P3-74011	9
534A4-22011	177	534A9-22201	175	534A9-22301	175	577P3-74011	31
534A4-22011	178	534A9-22201	176	534A9-22301	175	577P3-74011	34
534A4-22011	188	534A9-22201	176	534A9-22301	175	577P3-74011	38
534A4-22011	188	534A9-22201	177	534A9-22301	176	577P3-74011	41
534A4-22011	189	534A9-22201	177	534A9-22301	176	59505-54031	2
534A4-22101	147	534A9-22201	178	534A9-22301	177	59505-54031	10
534A4-22101	158	534A9-22201	186	534A9-22301	177	59505-54041	2
534A4-22101	177	534A9-22201	186	534A9-22301	178	59505-54041	10
534A4-22101	188	534A9-22201	187	534A9-22301	186	59505-54051	2
534A9-22001	145	534A9-22201	187	534A9-22301	186	59505-54051	10
534A9-22001	145	534A9-22201	188	534A9-22301	186	59565-54031	2
534A9-22001	146	534A9-22201	188	534A9-22301	186	59565-54031	10
534A9-22001	146	534A9-22201	189	534A9-22301	187	59595-55301	70
534A9-22001	156	534A9-22211	145	534A9-22301	187	59595-55301	89
534A9-22001	156	534A9-22211	145	534A9-22301	188	61026-22562	44
534A9-22001	157	534A9-22211	146	534A9-22301	188	61026-22562	56
534A9-22001	157	534A9-22211	146	534A9-22301	189	61150-12311	138
534A9-22001	175	534A9-22211	147	534F1-64401	9	61150-12311	139
534A9-22001	175	534A9-22211	147	534F1-64411	9	61150-12311	140
534A9-22001	176	534A9-22211	148	534F2-74001	9	61150-12311	168
534A9-22001	176	534A9-22211	156	534F2-74001	13	61150-12311	169
534A9-22001	186	534A9-22211	156	53819-32022	100	61150-12311	170

PARTS NUMBER INDEX

Part No.	Fig.No.	Part No.	Fig.No.	Part No.	Fig.No.	Part No.	Fig.No.
61150-12321	138	61170-23001	151	62A66-17001	13	620A3-80111	17
61150-12321	139	61170-23001	152	62A79-10101	77	620A3-80121	17
61150-12321	140	61170-23001	153	62A79-10101	85	620A3-80131	17
61150-12321	168	61170-23001	169	62A79-20101	68	620A3-80141	17
61150-12321	169	61170-23001	170	62A79-20101	79	620A3-80151	17
61150-12321	170	61170-23001	171	62A79-20101	87	620A3-80161	17
61150-12511	37	61170-23001	172	62A79-20101	94	620A3-80201	17
61150-12511	52	61170-23001	180	62A79-20202	68	620A3-80211	17
61150-12511	53	61170-23001	181	62A79-20202	79	62016-12251	1
61150-12511	54	61170-23001	182	62A79-20202	87	62016-12251	9
61150-12511	55	61170-23001	183	62A79-20202	94	62036-20302	44
61150-12511	64	61170-23011	140	62A86-10013	5	62036-20302	56
61150-12511	65	61170-23011	142	62B79-20101	69	62036-20401	44
61150-12511	66	61170-23011	151	62B79-20101	80	62036-20401	56
61150-12511	67	61170-23011	153	62B79-20101	88	62036-20901	44
61150-12511	73	61170-23011	170	62B79-20101	95	62036-20901	45
61150-12511	74	61170-23011	172	62B79-20202	69	62036-20911	45
61150-12511	83	61170-23011	181	62B79-20202	80	62036-20921	45
61150-12511	84	61170-23011	183	62B79-20202	88	62036-21402	44
61163-32012	139	61170-23021	150	62B79-20202	95	62036-21402	56
61163-32012	140	61170-23021	151	62C79-20101	68	62036-22261	45
61163-32012	141	61170-23021	152	62C79-20101	79	62036-22261	57
61163-32012	142	61170-23021	153	62C79-20101	87	62036-22301	44
61163-32012	150	61170-23021	180	62C79-20101	94	62036-22301	56
61163-32012	151	61170-23021	181	62C79-20202	68	62036-22512	44
61163-32012	169	61170-23021	182	62C79-20202	79	62036-22512	56
61163-32012	170	61170-23021	183	62C79-20202	87	62036-22521	44
61163-32012	171	61170-23031	151	62C79-20202	94	62036-22521	44
61163-32012	172	61170-23031	153	62D79-20101	69	62036-22521	56
61163-32012	180	61170-23031	181	62D79-20101	80	62036-22521	56
61163-32012	181	61170-23031	183	62D79-20101	88	62036-23202	45
61170-10101	137	61350-10021	138	62D79-20101	95	62036-23211	45
61170-10101	143	61350-10021	139	62D79-20202	69	62036-23211	57
61170-10101	154	61350-10021	140	62D79-20202	80	62036-23221	45
61170-10101	167	61350-10021	168	62D79-20202	88	62036-23221	57
61170-10101	173	61350-10021	169	62D79-20202	95	62036-23501	47
61170-10101	184	61350-10021	170	62E79-20101	68	62036-23501	49
61170-10111	137	61439-20702	71	62E79-20101	79	62036-23501	51
61170-10111	143	61439-20702	72	62E79-20101	87	62036-23501	53
61170-10111	154	61439-20702	73	62E79-20101	94	62036-23501	55
61170-10111	167	61439-20702	74	62E79-20202	68	62036-23501	59
61170-10111	173	61439-20702	75	62E79-20202	79	62036-23501	61
61170-10111	184	61439-20702	81	62E79-20202	87	62036-23501	63
61170-10151	137	61439-20702	82	62E79-20202	94	62036-23501	65
61170-10151	143	61439-20702	83	62F79-20101	69	62036-23501	67
61170-10151	154	61439-20702	84	62F79-20101	80	62036-24502	46
61170-10151	167	61439-20702	90	62F79-20101	88	62036-24502	47
61170-10151	173	61439-20702	91	62F79-20101	95	62036-24502	52
61170-10151	184	61439-20702	96	62F79-20202	69	62036-24502	53
61170-10201	137	61439-22602	75	62F79-20202	80	62036-24502	64
61170-10201	143	61439-22602	91	62F79-20202	88	62036-24502	65
61170-10201	154	61439-22612	75	62F79-20202	95	62036-82251	51
61170-10201	167	61439-22612	91	620A3-80001	17	62036-82251	63
61170-10201	173	61439-22641	75	620A3-80011	17	62039-12641	44
61170-10201	184	61439-22641	91	620A3-80021	17	62039-12641	56
61170-23001	139	61439-22651	75	620A3-80031	17	62039-12682	44
61170-23001	140	61439-22651	91	620A3-80041	17	62039-12682	77
61170-23001	141	62A66-17001	1	620A3-80051	17	62039-12682	102
61170-23001	142	62A66-17001	5	620A3-80061	17	62039-12691	44
61170-23001	150	62A66-17001	9	620A3-80101	17	62039-12691	56

PARTS NUMBER INDEX

Part No.	Fig.No.	Part No.	Fig.No.	Part No.	Fig.No.	Part No.	Fig.No.
62039-12691	77	62050-12301	163	62059-12801	77	62063-87001	17
62039-12691	85	62050-12301	164	62059-12801	85	62063-87001	24
62039-12691	102	62050-12301	165	62059-12801	86	62069-10001	102
62039-12691	116	62050-12301	166	62059-12801	102	62069-10011	102
62039-12751	44	62050-12321	132	62059-12801	111	62073-82051	17
62039-12751	56	62050-12321	133	62059-12801	112	62073-82051	24
62039-12751	77	62050-12321	134	62059-12801	115	62073-82061	17
62039-12751	85	62050-12321	162	62059-12801	116	62073-82061	24
62039-12751	102	62050-12321	163	62059-12801	125	621A3-40001	34
62039-12751	116	62050-12321	164	62059-12801	126	621A3-40011	34
62049-30205	98	62050-12331	130	62059-12801	129	621A3-40021	34
62049-30205	99	62050-12331	131	62059-12802	92	621A3-40031	34
62049-30205	99	62050-12331	132	62059-12802	97	621B0-12591	47
62049-30215	98	62050-12331	133	62059-30001	98	621B0-12591	49
62049-30215	99	62050-12331	134	62059-30001	99	621B0-12591	51
62049-30215	99	62050-12331	135	62059-37001	98	621B0-12591	59
62049-30225	98	62050-12331	136	62059-37001	99	621B0-12591	61
62049-30225	99	62050-12331	160	62059-37001	100	621B0-12591	63
62049-30235	98	62050-12331	161	62059-37001	101	621B0-12641	145
62049-30235	99	62050-12331	162	62063-80301	17	621B0-12641	145
62049-30245	98	62050-12331	163	62063-80311	17	621B0-12641	146
62049-30245	99	62050-12331	164	62063-80321	17	621B0-12641	156
62049-30255	98	62050-12331	165	62063-80331	17	621B0-12641	156
62049-30255	99	62050-12331	166	62063-80341	17	621B0-12641	157
62049-30305	98	62056-12651	1	62063-80351	17	621B0-12641	175
62049-30305	99	62056-12651	5	62063-80361	17	621B0-12641	175
62049-30305	99	62056-12651	9	62063-80401	17	621B0-12641	176
62049-30315	98	62056-12651	13	62063-80411	17	621B0-12641	186
62049-30315	99	62056-12661	5	62063-80421	17	621B0-12641	186
62049-30315	99	62056-12661	13	62063-80431	17	621B0-12641	187
62049-30325	98	62059-12001	77	62063-80441	17	621B0-12651	147
62049-30325	99	62059-12001	102	62063-80451	17	621B0-12651	148
62049-30335	98	62059-12051	77	62063-80461	17	621B0-12651	158
62049-30335	99	62059-12051	85	62063-80501	17	621B0-12651	159
62049-30345	98	62059-12051	102	62063-80511	17	621B0-12651	177
62049-30345	99	62059-12051	116	62063-80602	17	621B0-12651	178
62049-30355	98	62059-12101	77	62063-80602	18	621B0-12651	188
62049-30355	99	62059-12101	102	62063-80612	18	621B0-12651	189
62050-12021	130	62059-12151	77	62063-80612	25	621B9-10102	112
62050-12021	131	62059-12151	102	62063-80621	18	621B9-10112	112
62050-12021	132	62059-12151	116	62063-80621	25	621C9-10002	112
62050-12021	133	62059-12161	77	62063-80702	17	621C9-10012	112
62050-12021	134	62059-12161	102	62063-80702	18	621F0-12001	46
62050-12021	135	62059-12161	116	62063-80702	24	621F0-12001	47
62050-12021	136	62059-12201	77	62063-80702	25	621F0-12001	50
62050-12021	160	62059-12201	85	62063-80712	18	621F0-12001	51
62050-12021	161	62059-12201	102	62063-80712	25	621F0-12001	71
62050-12021	162	62059-12201	116	62063-80721	18	621F0-12001	72
62050-12021	163	62059-12211	77	62063-80721	25	621F0-12001	81
62050-12021	164	62059-12211	102	62063-80801	17	621F0-12001	82
62050-12021	165	62059-12501	74	62063-80811	17	621F0-12001	90
62050-12021	166	62059-12501	84	62063-80821	17	621F0-12001	96
62050-12301	130	62059-12501	104	62063-80831	17	621F0-12001	114
62050-12301	131	62059-12501	106	62063-80841	17	621F0-12001	128
62050-12301	133	62059-12501	107	62063-82502	17	621F0-12011	46
62050-12301	134	62059-12501	118	62063-82512	17	621F0-12011	47
62050-12301	135	62059-12501	120	62063-82651	18	621F0-12011	50
62050-12301	136	62059-12501	121	62063-82651	25	621F0-12011	51
62050-12301	160	62059-12601	77	62063-82661	18	621F0-12011	71
62050-12301	161	62059-12601	102	62063-82661	25	621F0-12011	72

PARTS NUMBER INDEX

Part No.	Fig.No.	Part No.	Fig.No.	Part No.	Fig.No.	Part No.	Fig.No.
621F0-12011	81	62140-12851	138	62150-12532	133	62150-12781	74
621F0-12011	82	62140-12851	139	62150-12532	134	62150-12781	84
621F0-12011	90	62140-12851	140	62150-12532	135	62150-12791	21
621F0-12011	96	62140-12851	168	62150-12532	136	62150-12791	22
621F0-12061	3	62140-12851	169	62150-12532	140	62150-12791	28
621F0-12061	7	62140-12851	170	62150-12532	142	62150-12791	29
621F0-12061	11	62150-12001	8	62150-12532	151	62150-12791	52
621F0-12061	15	62150-12001	16	62150-12532	153	62150-12791	53
621F0-12061	19	62150-12001	106	62150-12532	161	62150-12791	54
621F0-12061	20	62150-12001	107	62150-12532	162	62150-12791	55
621F0-12061	26	62150-12001	120	62150-12532	163	62150-12791	64
621F0-12061	27	62150-12001	121	62150-12532	164	62150-12791	65
621F0-12071	19	62150-12211	130	62150-12532	165	62150-12791	66
621F0-12071	20	62150-12211	131	62150-12532	166	62150-12791	67
621F0-12071	26	62150-12211	132	62150-12532	170	62150-12791	73
621F0-12071	27	62150-12211	133	62150-12532	172	62150-12791	74
621F0-12081	48	62150-12211	134	62150-12532	181	62150-12791	83
621F0-12081	49	62150-12211	135	62150-12532	183	62150-12791	84
621F0-12091	48	62150-12211	136	62150-12551	135	62150-12791	108
621F0-12091	49	62150-12211	160	62150-12551	136	62150-12791	109
62130-12171	135	62150-12211	161	62150-12561	165	62150-12791	122
62130-12171	136	62150-12211	162	62150-12561	166	62150-12791	123
62130-12171	165	62150-12211	163	62150-12612	139	62150-12841	22
62130-12171	166	62150-12211	164	62150-12612	140	62150-12841	29
62140-12811	138	62150-12211	165	62150-12612	169	62150-12841	106
62140-12811	138	62150-12211	166	62150-12612	170	62150-12841	107
62140-12811	139	62150-12231	132	62150-12701	52	62150-12841	120
62140-12811	139	62150-12231	133	62150-12701	53	62150-12841	121
62140-12811	140	62150-12231	162	62150-12701	54	62150-12861	106
62140-12811	140	62150-12231	163	62150-12701	55	62150-12861	107
62140-12811	168	62150-12241	132	62150-12701	64	62150-12861	120
62140-12811	168	62150-12241	133	62150-12701	65	62150-12861	121
62140-12811	169	62150-12241	162	62150-12701	66	62150-12981	138
62140-12811	169	62150-12241	163	62150-12701	67	62150-12981	139
62140-12811	170	62150-12512	139	62150-12701	74	62150-12981	140
62140-12811	170	62150-12512	140	62150-12701	84	62150-12981	141
62140-12821	138	62150-12512	169	62150-12701	107	62150-12981	142
62140-12821	138	62150-12512	170	62150-12701	121	62150-12981	149
62140-12821	139	62150-12522	131	62150-12771	52	62150-12981	150
62140-12821	139	62150-12522	132	62150-12771	53	62150-12981	151
62140-12821	140	62150-12522	133	62150-12771	54	62150-12981	168
62140-12821	140	62150-12522	134	62150-12771	55	62150-12981	169
62140-12821	168	62150-12522	135	62150-12771	64	62150-12981	170
62140-12821	168	62150-12522	136	62150-12771	65	62150-12981	171
62140-12821	169	62150-12522	140	62150-12771	66	62150-12981	172
62140-12821	169	62150-12522	142	62150-12771	67	62150-12981	179
62140-12821	170	62150-12522	151	62150-12771	74	62150-12981	180
62140-12821	170	62150-12522	153	62150-12771	84	62150-12981	181
62140-12831	138	62150-12522	161	62150-12771	106	62150-14001	137
62140-12831	139	62150-12522	162	62150-12771	107	62150-14001	143
62140-12831	140	62150-12522	163	62150-12771	120	62150-14001	154
62140-12831	168	62150-12522	164	62150-12771	121	62150-14001	167
62140-12831	169	62150-12522	165	62150-12781	52	62150-14001	173
62140-12831	170	62150-12522	166	62150-12781	53	62150-14001	184
62140-12841	138	62150-12522	170	62150-12781	54	62150-14011	133
62140-12841	139	62150-12522	172	62150-12781	55	62150-14011	137
62140-12841	140	62150-12522	181	62150-12781	64	62150-14011	143
62140-12841	168	62150-12522	183	62150-12781	65	62150-14011	154
62140-12841	169	62150-12532	131	62150-12781	66	62150-14011	163
62140-12841	170	62150-12532	132	62150-12781	67	62150-14011	167

PARTS NUMBER INDEX

Part No.	Fig.No.	Part No.	Fig.No.	Part No.	Fig.No.	Part No.	Fig.No.
62150-14011	173	62159-12082	103	62159-12241	103	62159-13061	115
62150-14011	184	62159-12082	113	62159-12241	113	62159-13061	125
62150-14041	137	62159-12082	117	62159-12241	117	62159-13061	129
62150-14041	143	62159-12082	127	62159-12241	127	62159-13081	86
62150-14041	154	62159-12101	78	62159-12261	77	62159-13081	111
62150-14041	167	62159-12101	93	62159-12261	85	62159-13081	115
62150-14041	173	62159-12101	103	62159-12261	92	62159-13081	125
62150-14041	184	62159-12101	113	62159-12261	97	62159-13081	129
62150-14301	20	62159-12101	117	62159-12261	102	62159-13091	86
62150-14301	27	62159-12101	127	62159-12261	112	62159-13091	111
62150-14311	137	62159-12111	78	62159-12261	116	62159-13091	115
62150-14311	143	62159-12111	93	62159-12261	126	62159-13091	125
62150-14311	154	62159-12111	103	62159-12271	77	62159-13091	129
62150-14311	167	62159-12111	113	62159-12271	85	62159-13101	86
62150-14311	173	62159-12111	117	62159-12271	92	62159-13101	111
62150-14311	184	62159-12111	127	62159-12271	97	62159-13101	115
62159-10101	92	62159-12132	77	62159-12271	102	62159-13101	125
62159-10101	97	62159-12132	85	62159-12271	112	62159-13101	129
62159-10201	77	62159-12132	92	62159-12271	116	62159-13161	86
62159-10201	78	62159-12132	97	62159-12271	126	62159-13161	111
62159-10201	85	62159-12132	102	62159-12501	102	62159-13161	115
62159-10201	92	62159-12132	112	62159-12501	112	62159-13161	125
62159-10201	93	62159-12132	116	62159-12501	116	62159-13161	129
62159-10201	97	62159-12132	126	62159-12501	126	62159-13251	86
62159-10201	102	62159-12141	92	62159-12511	102	62159-13251	111
62159-10201	103	62159-12141	97	62159-12511	112	62159-13251	115
62159-10201	112	62159-12201	78	62159-12511	116	62159-13251	125
62159-10201	113	62159-12201	93	62159-12511	126	62159-13251	129
62159-10201	116	62159-12201	103	62159-12551	78	62159-13261	86
62159-10201	117	62159-12201	113	62159-12551	93	62159-13261	111
62159-10201	126	62159-12201	117	62159-12551	103	62159-13261	115
62159-10201	127	62159-12201	127	62159-12551	113	62159-13261	125
62159-12021	78	62159-12211	78	62159-12551	117	62159-13261	129
62159-12021	93	62159-12211	93	62159-12551	127	62159-13281	86
62159-12021	103	62159-12211	103	62159-12561	78	62159-13281	111
62159-12021	113	62159-12211	113	62159-12561	93	62160-10001	160
62159-12021	117	62159-12211	117	62159-12561	103	62160-10001	161
62159-12021	127	62159-12211	127	62159-12561	113	62160-10001	162
62159-12031	78	62159-12221	78	62159-12561	117	62160-10001	163
62159-12031	93	62159-12221	93	62159-12561	127	62160-10001	164
62159-12031	103	62159-12221	103	62159-12702	77	62160-10001	165
62159-12031	113	62159-12221	113	62159-12702	85	62160-10001	166
62159-12031	117	62159-12221	117	62159-12702	92	62160-10001	168
62159-12031	127	62159-12221	127	62159-12702	97	62160-10001	169
62159-12061	78	62159-12231	77	62159-12702	102	62160-10001	170
62159-12061	93	62159-12231	78	62159-12702	112	62160-10001	171
62159-12061	103	62159-12231	85	62159-12702	116	62160-10001	172
62159-12061	113	62159-12231	92	62159-12702	126	62160-10001	179
62159-12061	117	62159-12231	93	62159-13041	86	62160-10001	180
62159-12061	127	62159-12231	97	62159-13041	111	62160-10001	181
62159-12071	77	62159-12231	102	62159-13041	115	62160-10001	182
62159-12071	85	62159-12231	103	62159-13041	125	62160-10001	183
62159-12071	92	62159-12231	112	62159-13041	129	62160-10011	130
62159-12071	97	62159-12231	113	62159-13051	86	62160-10011	131
62159-12071	102	62159-12231	116	62159-13051	111	62160-10011	132
62159-12071	112	62159-12231	117	62159-13051	115	62160-10011	133
62159-12071	116	62159-12231	126	62159-13051	125	62160-10011	134
62159-12071	126	62159-12231	127	62159-13051	129	62160-10011	135
62159-12082	78	62159-12241	78	62159-13061	86	62160-10011	136
62159-12082	93	62159-12241	93	62159-13061	111	62160-10011	138

PARTS NUMBER INDEX

Part No.	Fig.No.	Part No.	Fig.No.	Part No.	Fig.No.	Part No.	Fig.No.
62160-10011	139	62160-12302	160	62160-12401	169	62170-12551	140
62160-10011	140	62160-12302	161	62160-12401	170	62170-12551	149
62160-10011	141	62160-12302	162	62169-10101	102	62170-12551	150
62160-10011	142	62160-12302	163	62169-10101	112	62170-12551	151
62160-10011	149	62160-12302	164	62169-12001	102	62170-12551	168
62160-10011	150	62160-12302	165	62169-12001	112	62170-12551	169
62160-10011	151	62160-12302	166	62170-12001	138	62170-12551	170
62160-10011	152	62160-12302	168	62170-12001	139	62170-12551	179
62160-10011	153	62160-12302	169	62170-12001	140	62170-12551	180
62160-10011	160	62160-12302	170	62170-12001	168	62170-12551	181
62160-10011	161	62160-12302	171	62170-12001	169	62170-12571	37
62160-10011	162	62160-12302	172	62170-12001	170	62170-12571	52
62160-10011	163	62160-12302	179	62170-12051	138	62170-12571	53
62160-10011	164	62160-12302	180	62170-12051	139	62170-12571	54
62160-10011	165	62160-12302	181	62170-12051	140	62170-12571	55
62160-10011	166	62160-12302	182	62170-12051	168	62170-12571	64
62160-10011	168	62160-12302	183	62170-12051	169	62170-12571	65
62160-10011	169	62160-12312	130	62170-12051	170	62170-12571	66
62160-10011	170	62160-12312	131	62170-12081	138	62170-12571	67
62160-10011	171	62160-12312	132	62170-12081	139	62170-12571	73
62160-10011	172	62160-12312	133	62170-12081	140	62170-12571	74
62160-10011	179	62160-12312	134	62170-12081	168	62170-12571	83
62160-10011	180	62160-12312	135	62170-12081	169	62170-12571	84
62160-10011	181	62160-12312	136	62170-12081	170	62170-12571	138
62160-10011	182	62160-12312	138	62170-12091	138	62170-12571	139
62160-10011	183	62160-12312	139	62170-12091	139	62170-12571	140
62160-10021	160	62160-12312	140	62170-12091	140	62170-12571	168
62160-10021	161	62160-12312	141	62170-12091	168	62170-12571	169
62160-10021	162	62160-12312	142	62170-12091	169	62170-12571	170
62160-10021	163	62160-12312	149	62170-12091	170	62170-12601	138
62160-10021	164	62160-12312	150	62170-12311	138	62170-12601	139
62160-10021	165	62160-12312	151	62170-12311	139	62170-12601	140
62160-10021	166	62160-12312	152	62170-12311	140	62170-12601	168
62160-10021	168	62160-12312	153	62170-12311	141	62170-12601	169
62160-10021	169	62160-12312	160	62170-12311	142	62170-12601	170
62160-10021	170	62160-12312	161	62170-12311	149	62170-12611	138
62160-10021	171	62160-12312	162	62170-12311	150	62170-12611	139
62160-10021	172	62160-12312	163	62170-12311	151	62170-12611	140
62160-10021	179	62160-12312	164	62170-12311	168	62170-12611	168
62160-10021	180	62160-12312	165	62170-12311	169	62170-12611	169
62160-10021	181	62160-12312	166	62170-12311	170	62170-12611	170
62160-10021	182	62160-12312	168	62170-12311	171	62170-12651	138
62160-10021	183	62160-12312	169	62170-12311	172	62170-12651	139
62160-12302	130	62160-12312	170	62170-12311	179	62170-12651	140
62160-12302	131	62160-12312	171	62170-12311	180	62170-12651	149
62160-12302	132	62160-12312	172	62170-12311	181	62170-12651	149
62160-12302	133	62160-12312	179	62170-12501	138	62170-12651	150
62160-12302	134	62160-12312	180	62170-12501	139	62170-12651	150
62160-12302	135	62160-12312	181	62170-12501	140	62170-12651	151
62160-12302	136	62160-12312	182	62170-12501	149	62170-12651	151
62160-12302	138	62160-12312	183	62170-12501	150	62170-12651	168
62160-12302	139	62160-12401	130	62170-12501	151	62170-12651	169
62160-12302	140	62160-12401	131	62170-12501	168	62170-12651	170
62160-12302	141	62160-12401	132	62170-12501	169	62170-12651	179
62160-12302	142	62160-12401	133	62170-12501	170	62170-12651	179
62160-12302	149	62160-12401	134	62170-12501	179	62170-12651	180
62160-12302	150	62160-12401	135	62170-12501	180	62170-12651	180
62160-12302	151	62160-12401	136	62170-12501	181	62170-12651	181
62160-12302	152	62160-12401	139	62170-12551	138	62170-12651	181
62160-12302	153	62160-12401	140	62170-12551	139	62170-12671	138

Part No.	Fig.No.	Part No.	Fig.No.	Part No.	Fig.No.	Part No.	Fig.No.
62170-12671	139	62170-12901	153	62170-13081	168	62170-13201	168
62170-12671	140	62170-12901	169	62170-13081	169	62170-13201	169
62170-12671	149	62170-12901	170	62170-13081	170	62170-13201	170
62170-12671	150	62170-12901	171	62170-13091	138	62170-13211	138
62170-12671	151	62170-12901	172	62170-13091	139	62170-13211	139
62170-12671	168	62170-12901	180	62170-13091	140	62170-13211	140
62170-12671	169	62170-12901	181	62170-13091	168	62170-13211	168
62170-12671	170	62170-12901	182	62170-13091	169	62170-13211	169
62170-12671	179	62170-12901	183	62170-13091	170	62170-13211	170
62170-12671	180	62170-13001	138	62170-13101	138	62170-13221	138
62170-12671	181	62170-13001	139	62170-13101	139	62170-13221	139
62170-12701	138	62170-13001	140	62170-13101	140	62170-13221	140
62170-12701	139	62170-13001	168	62170-13101	168	62170-13221	168
62170-12701	140	62170-13001	169	62170-13101	169	62170-13221	169
62170-12701	149	62170-13001	170	62170-13101	170	62170-13221	170
62170-12701	150	62170-13011	138	62170-13111	138	62170-13231	138
62170-12701	151	62170-13011	139	62170-13111	139	62170-13231	138
62170-12701	168	62170-13011	140	62170-13111	140	62170-13231	139
62170-12701	169	62170-13011	168	62170-13111	168	62170-13231	139
62170-12701	170	62170-13011	169	62170-13111	169	62170-13231	140
62170-12701	179	62170-13011	170	62170-13111	170	62170-13231	140
62170-12701	180	62170-13021	138	62170-13121	138	62170-13231	168
62170-12701	181	62170-13021	139	62170-13121	139	62170-13231	168
62170-12711	138	62170-13021	140	62170-13121	140	62170-13231	169
62170-12711	139	62170-13021	168	62170-13121	168	62170-13231	169
62170-12711	140	62170-13021	169	62170-13121	169	62170-13231	170
62170-12711	149	62170-13021	170	62170-13121	170	62170-13231	170
62170-12711	150	62170-13031	138	62170-13131	138	62170-13241	138
62170-12711	151	62170-13031	139	62170-13131	139	62170-13241	138
62170-12711	168	62170-13031	140	62170-13131	140	62170-13241	139
62170-12711	169	62170-13031	168	62170-13131	168	62170-13241	139
62170-12711	170	62170-13031	169	62170-13131	169	62170-13241	140
62170-12711	179	62170-13031	170	62170-13131	170	62170-13241	140
62170-12711	180	62170-13041	138	62170-13141	138	62170-13241	168
62170-12711	181	62170-13041	139	62170-13141	139	62170-13241	168
62170-12731	138	62170-13041	140	62170-13141	140	62170-13241	169
62170-12731	139	62170-13041	168	62170-13141	168	62170-13241	169
62170-12731	140	62170-13041	169	62170-13141	169	62170-13241	170
62170-12731	149	62170-13041	170	62170-13141	170	62170-13241	170
62170-12731	149	62170-13051	138	62170-13151	138	62170-13251	138
62170-12731	150	62170-13051	139	62170-13151	139	62170-13251	139
62170-12731	150	62170-13051	140	62170-13151	140	62170-13251	140
62170-12731	151	62170-13051	168	62170-13151	168	62170-13251	168
62170-12731	151	62170-13051	169	62170-13151	169	62170-13251	169
62170-12731	168	62170-13051	170	62170-13151	170	62170-13251	170
62170-12731	169	62170-13061	138	62170-13161	138	62170-13261	138
62170-12731	170	62170-13061	139	62170-13161	139	62170-13261	138
62170-12731	179	62170-13061	140	62170-13161	140	62170-13261	138
62170-12731	179	62170-13061	168	62170-13161	168	62170-13261	139
62170-12731	180	62170-13061	169	62170-13161	169	62170-13261	139
62170-12731	180	62170-13061	170	62170-13161	170	62170-13261	139
62170-12731	181	62170-13071	138	62170-13171	138	62170-13261	140
62170-12731	181	62170-13071	139	62170-13171	139	62170-13261	140
62170-12901	139	62170-13071	140	62170-13171	140	62170-13261	140
62170-12901	140	62170-13071	168	62170-13171	168	62170-13261	168
62170-12901	141	62170-13071	169	62170-13171	169	62170-13261	168
62170-12901	142	62170-13071	170	62170-13171	170	62170-13261	168
62170-12901	150	62170-13081	138	62170-13201	138	62170-13261	169
62170-12901	151	62170-13081	139	62170-13201	139	62170-13261	169
62170-12901	152	62170-13081	140	62170-13201	140	62170-13261	169

PARTS NUMBER INDEX

Part No.	Fig.No.	Part No.	Fig.No.	Part No.	Fig.No.	Part No.	Fig.No.
62170-13261	170	622A3-80041	17	62246-20151	44	62246-20673	56
62170-13261	170	622A3-80051	17	62246-20161	44	62246-20683	44
62170-13261	170	622A3-80061	17	62246-20171	44	62246-20683	56
62170-13271	138	622A3-80101	17	62246-20181	44	62246-20693	44
62170-13271	139	622A3-80111	17	62246-20302	44	62246-20693	56
62170-13271	140	622A3-80121	17	62246-20403	44	62246-20703	44
62170-13271	168	622A3-80131	17	62246-20403	56	62246-20703	56
62170-13271	169	622A3-80141	17	62246-20413	44	62246-20713	44
62170-13271	170	622A3-80151	17	62246-20413	56	62246-20713	56
62170-13281	138	622A3-80161	17	62246-20423	44	62246-20723	44
62170-13281	139	622B6-10001	1	62246-20423	56	62246-20723	56
62170-13281	140	622B6-10011	1	62246-20433	44	62246-20733	44
62170-13281	168	622B6-10021	1	62246-20433	56	62246-20733	56
62170-13281	169	622B6-10031	1	62246-20443	44	62246-20743	44
62170-13281	170	622B6-10041	1	62246-20443	56	62246-20743	56
62170-13291	138	622B6-10051	1	62246-20453	44	62246-20753	44
62170-13291	139	622B6-10301	1	62246-20453	56	62246-20753	56
62170-13291	140	622B6-10311	1	62246-20463	44	62246-20801	44
62170-13291	168	622B6-10321	1	62246-20463	56	62246-20801	56
62170-13291	169	622B6-10331	1	62246-20473	44	62246-20811	44
62170-13291	170	622B6-10341	1	62246-20473	56	62246-20811	56
62170-13301	138	622B6-10351	1	62246-20483	44	62246-20821	44
62170-13301	139	62233-45001	72	62246-20483	56	62246-20821	56
62170-13301	140	62233-45001	82	62246-20493	44	62246-20831	44
62170-13301	168	62233-45001	105	62246-20493	56	62246-20831	56
62170-13301	169	62233-45001	119	62246-20503	44	62246-20901	44
62170-13301	170	62243-40614	31	62246-20503	56	62246-20901	45
62170-13311	138	62243-40614	31	62246-20513	44	62246-20911	44
62170-13311	139	62243-40614	34	62246-20513	56	62246-20911	45
62170-13311	140	62243-40614	34	62246-20523	44	62246-20921	44
62170-13311	168	62243-40624	31	62246-20523	56	62246-20921	45
62170-13311	169	62243-40624	34	62246-20533	44	62246-20951	45
62170-13311	170	62243-40634	31	62246-20533	56	62246-20961	45
62170-13321	138	62243-40634	34	62246-20543	44	62246-20971	45
62170-13321	139	62243-40644	31	62246-20543	56	62246-22121	44
62170-13321	140	62243-40644	34	62246-20553	44	62246-22121	56
62170-13321	168	62243-40654	31	62246-20553	56	62246-23881	44
62170-13321	169	62243-40654	34	62246-20563	44	62246-23881	56
62170-13321	170	62243-40664	31	62246-20563	56	62246-23891	44
62170-13331	138	62243-40664	34	62246-20573	44	62246-23891	56
62170-13331	139	62243-40671	31	62246-20573	56	62246-24101	44
62170-13331	140	62243-40671	34	62246-20583	44	62246-24101	44
62170-13331	168	62243-42532	35	62246-20583	56	62246-24101	56
62170-13331	169	62243-42532	42	62246-20593	44	62246-24101	56
62170-13331	170	62243-42621	34	62246-20593	56	62246-24111	44
62173-40101	34	62243-42621	41	62246-20603	44	62246-24111	44
62179-10101	92	62243-42821	35	62246-20603	56	62246-24111	56
62179-10111	92	62243-42821	42	62246-20613	44	62246-24111	56
622A3-40001	34	62246-20001	44	62246-20613	56	62246-24121	44
622A3-40011	34	62246-20011	44	62246-20623	44	62246-24121	44
622A3-40021	34	62246-20021	44	62246-20623	56	62246-24121	56
622A3-40031	34	62246-20031	44	62246-20633	44	62246-24121	56
622A3-42401	36	62246-20041	44	62246-20633	56	62246-24131	44
622A3-42411	36	62246-20051	44	62246-20643	44	62246-24131	56
622A3-42501	36	62246-20061	44	62246-20643	56	62246-24141	44
622A3-42501	43	62246-20071	44	62246-20653	44	62246-24141	56
622A3-80001	17	62246-20101	44	62246-20653	56	62246-24151	44
622A3-80011	17	62246-20111	44	62246-20663	44	62246-24151	56
622A3-80021	17	62246-20121	44	62246-20663	56	62246-24201	20
622A3-80031	17	62246-20131	44	62246-20673	44	62246-24201	27

PARTS NUMBER INDEX

Part No.	Fig.No.	Part No.	Fig.No.	Part No.	Fig.No.	Part No.	Fig.No.
62246-24201	50	62286-10101	1	62346-20473	56	62346-24001	56
62246-24201	51	62286-12201	4	62346-20483	44	62346-24011	44
62246-24201	54	62286-12201	12	62346-20483	56	62346-24011	44
62246-24201	55	623A3-40001	34	62346-20493	44	62346-24011	44
62246-24201	62	623A3-40011	34	62346-20493	56	62346-24011	44
62246-24201	63	623A3-40021	34	62346-20503	44	62346-24011	44
62246-24201	66	623A3-40031	34	62346-20503	56	62346-24011	44
62246-24201	67	623A3-80001	17	62346-20513	44	62346-24011	44
62246-24521	44	623A3-80011	17	62346-20513	56	62346-24011	44
62246-24521	44	623A3-80021	17	62346-20523	44	62346-24011	44
62246-24521	44	623A3-80031	17	62346-20523	56	62346-24011	44
62246-24521	56	623A3-80041	17	62346-20533	44	62346-24011	44
62246-24521	56	623A3-80051	17	62346-20533	56	62346-24011	44
62246-24521	56	623A3-80061	17	62346-20543	44	62346-24011	56
62246-24521	56	623A3-80101	17	62346-20543	56	62346-24011	56
62246-24531	44	623A3-80111	17	62346-20553	44	62346-24011	56
62246-24531	56	623A3-80121	17	62346-20553	56	62346-24011	56
62246-24541	44	623A3-80131	17	62346-20563	44	62346-24011	56
62246-24541	44	623A3-80141	17	62346-20563	56	62346-24011	56
62246-24541	56	623A3-80151	17	62346-20573	44	62346-24011	56
62246-24541	56	623A3-80161	17	62346-20573	56	62346-24011	56
62246-24551	44	623B6-10001	1	62346-20583	44	62346-24011	56
62246-24551	44	623B6-10011	1	62346-20583	56	62346-24011	56
62246-24551	56	623B6-10021	1	62346-20593	44	62346-24011	56
62246-24551	56	623B6-10031	1	62346-20593	56	62346-24011	56
62246-24561	44	623B6-10041	1	62346-20603	44	62346-24021	44
62246-24561	44	623B6-10051	1	62346-20603	56	62346-24021	44
62246-24561	56	623B6-10301	1	62346-20613	44	62346-24021	44
62246-24561	56	623B6-10311	1	62346-20613	56	62346-24021	44
62246-24601	44	623B6-10321	1	62346-20623	44	62346-24021	44
62246-27001	44	623B6-10331	1	62346-20623	56	62346-24021	44
62246-27001	56	623B6-10341	1	62346-20633	44	62346-24021	44
62253-40921	35	623B6-10351	1	62346-20633	56	62346-24021	44
62253-42261	35	62346-20001	44	62346-20643	44	62346-24021	44
62253-42261	42	62346-20011	44	62346-20643	56	62346-24021	44
62253-42511	36	62346-20021	44	62346-20653	44	62346-24021	44
62253-42511	43	62346-20031	44	62346-20653	56	62346-24021	44
62263-40901	34	62346-20041	44	62346-20663	44	62346-24021	44
62263-40901	35	62346-20051	44	62346-20663	56	62346-24021	44
62263-40911	34	62346-20061	44	62346-20673	44	62346-24021	56
62263-40911	35	62346-20071	44	62346-20673	56	62346-24021	56
62263-40961	35	62346-20101	44	62346-20683	44	62346-24021	56
62263-40971	35	62346-20111	44	62346-20683	56	62346-24021	56
62263-42721	31	62346-20121	44	62346-20693	44	62346-24021	56
62263-42721	34	62346-20131	44	62346-20693	56	62346-24021	56
62263-42721	38	62346-20403	44	62346-20703	44	62346-24021	56
62263-42721	41	62346-20403	56	62346-20703	56	62346-24021	56
62263-47001	31	62346-20413	44	62346-20713	44	62346-24021	56
62263-47001	34	62346-20413	56	62346-20713	56	62346-24021	56
62263-47001	38	62346-20423	44	62346-20723	44	62346-24021	56
62263-47001	41	62346-20423	56	62346-20723	56	62346-24021	56
62263-82051	17	62346-20433	44	62346-20733	44	62346-24021	56
62263-82051	24	62346-20433	56	62346-20733	56	62346-24021	56
62273-40101	34	62346-20443	44	62346-20743	44	62346-24101	44
62273-40201	34	62346-20443	56	62346-20743	56	62346-24101	44
62273-40211	34	62346-20453	44	62346-20753	44	62346-24101	44
62273-40501	34	62346-20453	56	62346-20753	56	62346-24101	44
62273-40601	34	62346-20463	44	62346-24001	44	62346-24101	44
62273-80201	17	62346-20463	56	62346-24001	44	62346-24101	44
62273-80211	17	62346-20473	44	62346-24001	56	62346-24101	44

PARTS NUMBER INDEX

Part No.	Fig.No.	Part No.	Fig.No.	Part No.	Fig.No.	Part No.	Fig.No.
62346-24101	44	62453-40702	31	62479-20302	88	62479-20601	79
62346-24101	44	62453-40702	32	62479-20302	94	62479-20601	79
62346-24101	44	62453-40712	32	62479-20302	95	62479-20601	79
62346-24101	44	62453-40722	32	62479-20312	68	62479-20601	80
62346-24101	44	62453-40732	31	62479-20312	69	62479-20601	80
62346-24101	44	62453-40732	32	62479-20312	79	62479-20601	87
62346-24101	44	62453-40742	32	62479-20312	80	62479-20601	87
62346-24101	44	62453-42631	32	62479-20312	87	62479-20601	87
62346-24101	44	62453-42631	39	62479-20312	88	62479-20601	88
62346-24101	44	62453-42652	31	62479-20312	94	62479-20601	88
62346-24101	44	62453-42652	38	62479-20312	95	62479-20601	94
62346-24101	56	62453-42662	31	62479-20322	68	62479-20601	94
62346-24101	56	62453-42662	38	62479-20322	69	62479-20601	94
62346-24101	56	62453-42701	31	62479-20322	79	62479-20601	95
62346-24101	56	62453-42701	38	62479-20322	80	62479-20601	95
62346-24101	56	62453-42711	31	62479-20322	87	62479-20611	68
62346-24101	56	62453-42711	38	62479-20322	88	62479-20611	68
62346-24101	56	62459-23271	70	62479-20322	94	62479-20611	79
62346-24101	56	62459-23271	89	62479-20322	95	62479-20611	79
62346-24101	56	62463-40201	31	62479-20401	69	62479-20611	87
62346-24101	56	62463-40301	31	62479-20401	80	62479-20611	87
62346-24101	56	62463-40501	31	62479-20401	88	62479-20611	94
62346-24101	56	62463-40601	31	62479-20401	95	62479-20611	94
62346-24101	56	62469-27001	130	62479-20411	69	62479-20621	69
62346-24101	56	62469-27001	131	62479-20411	80	62479-20621	69
62346-24101	56	62469-27001	132	62479-20411	88	62479-20621	80
62346-24101	56	62469-27001	133	62479-20411	95	62479-20621	80
62346-24101	56	62469-27001	134	62479-20421	69	62479-20621	88
62346-24101	56	62469-27001	135	62479-20421	80	62479-20621	88
62373-40101	34	62469-27001	136	62479-20421	88	62479-20621	95
62373-40201	34	62469-27001	145	62479-20421	95	62479-20621	95
62373-40211	34	62469-27001	146	62479-20431	69	62479-20631	68
62373-80201	17	62469-27001	147	62479-20431	80	62479-20631	69
62373-80211	17	62469-27001	148	62479-20431	88	62479-20631	79
62386-10101	1	62469-27001	150	62479-20431	95	62479-20631	80
62386-12211	21	62469-27001	151	62479-20441	69	62479-20631	87
62386-12211	22	62469-27001	152	62479-20441	80	62479-20631	88
62386-12211	28	62469-27001	153	62479-20441	88	62479-20631	94
62386-12211	29	62469-27001	156	62479-20441	95	62479-20631	95
624A3-40001	31	62469-27001	160	62479-20451	69	62479-20641	68
624A3-40011	31	62469-27001	161	62479-20451	80	62479-20641	68
624A3-40021	31	62469-27001	162	62479-20451	88	62479-20641	79
624A3-40031	31	62469-27001	163	62479-20451	95	62479-20641	79
624A3-40101	31	62469-27001	164	62479-20461	68	62479-20641	87
624A3-42501	33	62469-27001	165	62479-20461	79	62479-20641	87
624A3-42501	40	62469-27001	166	62479-20461	87	62479-20641	94
62433-42701	31	62469-27001	175	62479-20461	94	62479-20641	94
62433-42701	38	62469-27001	176	62479-20471	68	62479-20651	69
62439-22181	68	62469-27001	177	62479-20471	79	62479-20651	80
62439-22181	69	62469-27001	178	62479-20471	87	62479-20651	88
62439-22181	70	62469-27001	180	62479-20471	94	62479-20651	95
62439-22181	79	62469-27001	181	62479-20481	68	62479-20801	68
62439-22181	80	62469-27001	182	62479-20481	79	62479-20801	69
62439-22181	87	62469-27001	183	62479-20481	87	62479-20801	70
62439-22181	88	62469-27001	186	62479-20481	94	62479-20801	79
62439-22181	89	62479-20302	68	62479-20601	68	62479-20801	80
62439-22181	94	62479-20302	69	62479-20601	68	62479-20801	87
62439-22181	95	62479-20302	79	62479-20601	68	62479-20801	88
62439-22832	75	62479-20302	80	62479-20601	69	62479-20801	89
62439-22832	91	62479-20302	87	62479-20601	69	62479-20801	94

PARTS NUMBER INDEX

Part No.	Fig.No.	Part No.	Fig.No.	Part No.	Fig.No.	Part No.	Fig.No.
62479-20801	95	62479-23701	80	62479-24901	88	625B6-10011	1
62479-20811	68	62479-23701	88	62479-24901	94	625B6-10021	1
62479-20811	69	62479-23701	95	62479-24901	95	625B6-10031	1
62479-20811	70	62479-23751	69	62479-24911	69	625B6-10041	1
62479-20811	79	62479-23751	80	62479-24911	80	625B6-10051	1
62479-20811	80	62479-23751	88	62479-24911	88	625B6-10101	1
62479-20811	87	62479-23751	95	62479-24911	95	625B6-10301	1
62479-20811	88	62479-23801	68	62479-24921	68	625B6-10311	1
62479-20811	89	62479-23801	69	62479-24921	69	625B6-10321	1
62479-20811	94	62479-23801	79	62479-24921	79	625B6-10331	1
62479-20811	95	62479-23801	80	62479-24921	80	625B6-10341	1
62479-20821	68	62479-23801	87	62479-24921	87	625B6-10351	1
62479-20821	69	62479-23801	88	62479-24921	88	62516-12261	1
62479-20821	70	62479-23801	94	62479-24921	94	62516-12261	9
62479-20821	79	62479-23801	95	62479-24921	95	62516-12261	17
62479-20821	80	62479-23821	68	62479-24951	68	62516-12261	24
62479-20821	87	62479-23821	69	62479-24951	69	62536-10301	1
62479-20821	88	62479-23821	79	62479-24951	79	62536-10301	2
62479-20821	89	62479-23821	80	62479-24951	80	62536-10301	9
62479-20821	94	62479-23821	87	62479-24951	87	62536-10301	10
62479-20821	95	62479-23821	88	62479-24951	88	62536-19801	2
62479-20831	68	62479-23821	94	62479-24951	94	62536-19801	10
62479-20831	69	62479-23821	95	62479-24951	95	62546-10311	2
62479-20831	70	62479-23841	69	62479-25002	70	62546-10311	10
62479-20831	79	62479-23841	80	62479-25002	89	62546-10321	2
62479-20831	80	62479-23841	88	62479-25012	70	62546-10321	10
62479-20831	87	62479-23841	95	62479-25012	89	62546-10341	10
62479-20831	88	62479-23861	68	62479-25022	70	62546-12191	2
62479-20831	89	62479-23861	79	62479-25022	89	62546-12191	10
62479-20831	94	62479-23861	87	62479-25032	70	62546-12201	2
62479-20831	95	62479-23861	94	62479-25032	89	62546-12201	10
62479-20841	68	62479-23901	68	62479-25042	70	62546-12211	2
62479-20841	69	62479-23901	69	62479-25042	89	62546-12211	10
62479-20841	70	62479-23901	79	62479-25052	70	62556-10401	1
62479-20841	79	62479-23901	80	62479-25052	89	62556-10401	2
62479-20841	80	62479-23901	87	62479-25101	70	62556-10401	9
62479-20841	87	62479-23901	88	62479-25101	89	62556-10401	10
62479-20841	88	62479-23901	94	62479-25111	70	62556-10411	10
62479-20841	89	62479-23901	95	62479-25111	89	62556-19801	2
62479-20841	94	62479-24502	68	62479-25121	70	62556-19801	10
62479-20841	95	62479-24502	68	62479-25121	89	62576-10201	1
62479-20851	68	62479-24502	69	62479-25251	70	62576-10211	1
62479-20851	69	62479-24502	69	62479-25251	89	62576-10221	1
62479-20851	70	62479-24502	79	62479-25521	70	62576-12301	1
62479-20851	79	62479-24502	79	62479-25521	89	62576-12301	9
62479-20851	80	62479-24502	80	62479-25541	70	62576-12311	1
62479-20851	87	62479-24502	80	62479-25541	89	62576-12311	9
62479-20851	88	62479-24502	87	62479-25601	70	62576-12321	1
62479-20851	89	62479-24502	87	62479-25601	89	62576-12331	1
62479-20851	94	62479-24502	88	62479-25901	75	62576-12331	9
62479-20851	95	62479-24502	88	62479-25901	91	62576-12351	1
62479-23591	68	62479-24502	94	62479-27001	68	62576-12351	9
62479-23591	69	62479-24502	94	62479-27001	69	62576-12351	17
62479-23591	79	62479-24502	95	62479-27001	79	62576-12351	24
62479-23591	80	62479-24502	95	62479-27001	80	62576-12601	1
62479-23591	87	62479-24901	68	62479-27001	87	62576-12701	1
62479-23591	88	62479-24901	69	62479-27001	88	62576-12701	9
62479-23591	94	62479-24901	79	62479-27001	94	62576-12961	1
62479-23591	95	62479-24901	80	62479-27001	95	62576-12961	5
62479-23701	69	62479-24901	87	625B6-10001	1	62576-12961	9

PARTS NUMBER INDEX

Part No.	Fig.No.	Part No.	Fig.No.	Part No.	Fig.No.	Part No.	Fig.No.
62576-12961	13	628A3-80071	24	63059-12001	116	63110-11521	30
62576-12971	1	628A3-80101	24	63059-12151	85	63110-11521	76
62576-12971	5	628A3-80111	24	63059-12161	85	63110-11521	110
62576-12971	9	628A3-80121	24	63059-12201	85	63110-11521	124
62576-12971	13	628A3-80131	24	63059-12201	116	63110-11531	23
62576-12981	1	628A3-80141	24	63059-12601	85	63110-11531	30
62576-12981	5	628A3-80151	24	63059-12601	116	63110-11531	76
62576-12981	9	628A3-80161	24	63059-12801	102	63110-11531	110
62576-12981	13	628A3-80171	24	63059-12801	111	63110-11531	124
62576-12991	1	628B6-10001	9	63059-12801	112	63110-12181	135
62576-12991	5	628B6-10011	9	63059-12801	115	63110-12181	136
62576-12991	9	628B6-10021	9	63059-12801	116	63110-12181	165
62576-12991	13	628B6-10031	9	63059-12801	125	63110-12181	166
62576-13001	1	628B6-10041	9	63059-12801	126	63110-12281	21
62576-13001	5	628B6-10051	9	63059-12801	129	63110-12281	22
62576-13001	9	628B6-10301	9	63069-10001	116	63110-12281	28
62576-13001	13	628B6-10311	9	63069-10011	116	63110-12281	29
62576-13011	1	628B6-10321	9	631A3-40001	41	63110-12281	52
62576-13011	5	628B6-10331	9	631A3-40011	41	63110-12281	53
62576-13011	9	628B6-10341	9	631A3-40021	41	63110-12281	54
62576-13011	13	628B6-10351	9	631A3-40031	41	63110-12281	55
62576-13021	1	62873-81001	24	631A3-40101	41	63110-12281	64
62576-13021	5	62873-81011	24	631A3-42401	43	63110-12281	65
62576-13021	9	62876-10101	9	631A3-42411	43	63110-12281	66
62576-13021	13	629A3-80001	24	631A3-80001	24	63110-12281	67
62576-13031	1	629A3-80011	24	631A3-80011	24	63110-12281	73
62576-13031	5	629A3-80021	24	631A3-80021	24	63110-12281	74
62576-13031	9	629A3-80031	24	631A3-80031	24	63110-12281	83
62576-13031	13	629A3-80041	24	631A3-80041	24	63110-12281	84
62576-13041	1	629A3-80051	24	631A3-80051	24	63110-12281	108
62576-13041	5	629A3-80061	24	631A3-80061	24	63110-12281	109
62576-13041	9	629A3-80071	24	631A3-80071	24	63110-12281	122
62576-13041	13	629A3-80101	24	631A3-80101	24	63110-12281	123
62576-17001	1	629A3-80111	24	631A3-80111	24	63110-12311	71
62576-17001	5	629A3-80121	24	631A3-80121	24	63110-12311	72
62576-17001	9	629A3-80131	24	631A3-80131	24	63110-12311	73
62576-17001	13	629A3-80141	24	631A3-80141	24	63110-12311	74
627A3-40001	38	629A3-80151	24	631A3-80151	24	63110-12311	81
627A3-40011	38	629A3-80161	24	631A3-80161	24	63110-12311	82
627A3-40021	38	629A3-80171	24	631A3-80171	24	63110-12311	83
627A3-40031	38	629B6-10001	9	631A3-80201	24	63110-12311	84
627A3-40101	38	629B6-10011	9	631A3-80211	24	63110-12311	90
62763-40702	38	629B6-10021	9	631A6-10001	9	63110-12311	96
62763-40702	39	629B6-10031	9	631A6-10011	9	63110-12351	20
62763-40712	39	629B6-10041	9	631A6-10021	9	63110-12351	21
62763-40722	39	629B6-10051	9	631A6-10031	9	63110-12351	22
62763-40732	38	629B6-10301	9	631A6-10041	9	63110-12351	27
62763-40732	39	629B6-10311	9	631A6-10051	9	63110-12351	28
62763-40742	39	629B6-10321	9	631A6-10101	9	63110-12351	29
62773-40111	38	629B6-10331	9	631A6-10301	9	63110-13121	50
62773-40121	38	629B6-10341	9	631A6-10311	9	63110-13121	51
62773-40501	38	629B6-10351	9	631A6-10321	9	63110-13121	54
62773-40601	38	62973-81001	24	631A6-10331	9	63110-13121	55
628A3-80001	24	62973-81011	24	631A6-10341	9	63110-13121	62
628A3-80011	24	62976-10101	9	631A6-10351	9	63110-13121	63
628A3-80021	24	63A86-10011	13	631B9-10102	126	63110-13121	66
628A3-80031	24	63039-12631	56	631B9-10112	126	63110-13121	67
628A3-80041	24	63039-12682	85	631C9-10002	126	63110-14511	23
628A3-80051	24	63039-12682	116	631C9-10012	126	63110-14511	30
628A3-80061	24	63059-12001	85	63110-11521	23	63110-14511	76

Part No.	Fig.No.	Part No.	Fig.No.	Part No.	Fig.No.	Part No.	Fig.No.
63110-14511	110	63110-18661	49	63110-18921	5	63110-19211	87
63110-14511	124	63110-18661	51	63110-18921	13	63110-19211	88
63110-14661	33	63110-18661	59	63110-18921	17	63110-19211	94
63110-14661	40	63110-18661	61	63110-18921	24	63110-19211	95
63110-14661	58	63110-18661	63	63110-18921	31	63110-19211	99
63110-14661	59	63110-18661	72	63110-18921	34	63110-19211	101
63110-14661	62	63110-18661	72	63110-18921	38	63110-19221	44
63110-14661	63	63110-18661	82	63110-18921	41	63110-19221	56
63110-14661	104	63110-18661	82	63110-18921	44	63110-19221	68
63110-14661	105	63110-18661	104	63110-18921	56	63110-19221	69
63110-14661	118	63110-18661	105	63110-18921	68	63110-19221	79
63110-14661	119	63110-18661	118	63110-18921	69	63110-19221	80
63110-14681	60	63110-18661	119	63110-18921	79	63110-19221	98
63110-14681	61	63110-18841	37	63110-18921	80	63110-19221	100
63110-14731	8	63110-18901	1	63110-18921	87	63110-19231	1
63110-14731	16	63110-18901	5	63110-18921	88	63110-19231	5
63110-14731	21	63110-18901	9	63110-18921	94	63110-19231	9
63110-14731	22	63110-18901	13	63110-18921	95	63110-19231	13
63110-14731	28	63110-18901	17	63110-18921	98	63110-19231	17
63110-14731	29	63110-18901	24	63110-18921	99	63110-19231	24
63110-14751	8	63110-18901	31	63110-18921	100	63110-19231	31
63110-14751	16	63110-18901	34	63110-18921	101	63110-19231	34
63110-14751	21	63110-18901	38	63110-19131	44	63110-19231	38
63110-14751	28	63110-18901	41	63110-19131	56	63110-19231	41
63110-14751	107	63110-18901	44	63110-19131	68	63110-19231	87
63110-14751	121	63110-18901	56	63110-19131	69	63110-19231	88
63110-16301	23	63110-18901	68	63110-19131	79	63110-19231	94
63110-16301	30	63110-18901	69	63110-19131	80	63110-19231	95
63110-16301	76	63110-18901	79	63110-19131	87	63110-19231	99
63110-16301	110	63110-18901	80	63110-19131	88	63110-19231	101
63110-16301	124	63110-18901	87	63110-19131	94	63110-19241	44
63110-18511	44	63110-18901	88	63110-19131	95	63110-19241	56
63110-18511	56	63110-18901	94	63110-19151	44	63110-19241	68
63110-18511	68	63110-18901	95	63110-19151	56	63110-19241	69
63110-18511	69	63110-18901	98	63110-19151	68	63110-19241	79
63110-18511	79	63110-18901	99	63110-19151	69	63110-19241	80
63110-18511	80	63110-18901	100	63110-19151	79	63110-19241	98
63110-18511	87	63110-18901	101	63110-19151	80	63110-19241	100
63110-18511	88	63110-18911	5	63110-19201	44	63110-19251	1
63110-18511	94	63110-18911	13	63110-19201	56	63110-19251	5
63110-18511	95	63110-18911	17	63110-19201	56	63110-19251	9
63110-18521	44	63110-18911	24	63110-19201	56	63110-19251	13
63110-18521	56	63110-18911	31	63110-19201	68	63110-19251	17
63110-18521	68	63110-18911	34	63110-19201	69	63110-19251	24
63110-18521	69	63110-18911	38	63110-19201	79	63110-19251	31
63110-18521	79	63110-18911	41	63110-19201	80	63110-19251	34
63110-18521	80	63110-18911	44	63110-19201	98	63110-19251	38
63110-18521	87	63110-18911	56	63110-19201	99	63110-19251	41
63110-18521	88	63110-18911	68	63110-19201	100	63110-19251	87
63110-18521	94	63110-18911	69	63110-19201	101	63110-19251	88
63110-18521	95	63110-18911	79	63110-19211	1	63110-19251	94
63110-18601	50	63110-18911	80	63110-19211	5	63110-19251	95
63110-18601	51	63110-18911	87	63110-19211	9	63110-19251	99
63110-18601	54	63110-18911	88	63110-19211	13	63110-19251	101
63110-18601	55	63110-18911	94	63110-19211	17	63110-19261	44
63110-18601	62	63110-18911	95	63110-19211	24	63110-19261	56
63110-18601	63	63110-18911	98	63110-19211	31	63110-19261	68
63110-18601	66	63110-18911	99	63110-19211	34	63110-19261	69
63110-18601	67	63110-18911	100	63110-19211	38	63110-19261	79
63110-18661	47	63110-18911	101	63110-19211	41	63110-19261	80

PARTS NUMBER INDEX

Part No.	Fig.No.	Part No.	Fig.No.	Part No.	Fig.No.	Part No.	Fig.No.
63110-19261	98	63110-19311	87	63110-19361	98	63110-19421	94
63110-19261	100	63110-19311	88	63110-19361	100	63110-19421	95
63110-19271	1	63110-19311	94	63110-19371	44	63110-19431	44
63110-19271	5	63110-19311	95	63110-19371	56	63110-19431	56
63110-19271	9	63110-19311	99	63110-19371	68	63110-19431	68
63110-19271	13	63110-19311	101	63110-19371	69	63110-19431	69
63110-19271	17	63110-19321	44	63110-19371	79	63110-19431	79
63110-19271	24	63110-19321	56	63110-19371	80	63110-19431	80
63110-19271	31	63110-19321	68	63110-19371	87	63110-19431	87
63110-19271	34	63110-19321	69	63110-19371	88	63110-19431	88
63110-19271	38	63110-19321	79	63110-19371	94	63110-19431	94
63110-19271	41	63110-19321	80	63110-19371	95	63110-19431	95
63110-19271	87	63110-19321	98	63110-19381	44	63110-19441	44
63110-19271	88	63110-19321	100	63110-19381	56	63110-19441	56
63110-19271	94	63110-19331	1	63110-19381	68	63110-19441	68
63110-19271	95	63110-19331	5	63110-19381	69	63110-19441	69
63110-19271	99	63110-19331	9	63110-19381	79	63110-19441	79
63110-19271	101	63110-19331	13	63110-19381	80	63110-19441	80
63110-19281	44	63110-19331	17	63110-19381	87	63110-19441	87
63110-19281	56	63110-19331	24	63110-19381	88	63110-19441	88
63110-19281	68	63110-19331	31	63110-19381	94	63110-19441	94
63110-19281	69	63110-19331	34	63110-19381	95	63110-19441	95
63110-19281	79	63110-19331	38	63110-19391	44	63110-19691	68
63110-19281	80	63110-19331	41	63110-19391	56	63110-19691	69
63110-19281	98	63110-19331	87	63110-19391	68	63110-19691	79
63110-19281	100	63110-19331	88	63110-19391	69	63110-19691	80
63110-19291	1	63110-19331	94	63110-19391	79	63110-19691	87
63110-19291	5	63110-19331	95	63110-19391	80	63110-19691	88
63110-19291	9	63110-19331	99	63110-19391	87	63110-19691	94
63110-19291	13	63110-19331	101	63110-19391	88	63110-19691	95
63110-19291	17	63110-19341	44	63110-19391	94	63110-19691	98
63110-19291	24	63110-19341	56	63110-19391	95	63110-19691	99
63110-19291	31	63110-19341	68	63110-19401	44	63110-19691	100
63110-19291	34	63110-19341	69	63110-19401	56	63110-19691	101
63110-19291	38	63110-19341	79	63110-19401	68	63110-19761	68
63110-19291	41	63110-19341	80	63110-19401	69	63110-19761	69
63110-19291	87	63110-19341	98	63110-19401	79	63110-19761	79
63110-19291	88	63110-19341	100	63110-19401	80	63110-19761	80
63110-19291	94	63110-19351	1	63110-19401	87	63110-19761	87
63110-19291	95	63110-19351	5	63110-19401	88	63110-19761	88
63110-19291	99	63110-19351	9	63110-19401	94	63110-19761	94
63110-19291	101	63110-19351	13	63110-19401	95	63110-19761	95
63110-19301	44	63110-19351	17	63110-19411	44	63110-19811	1
63110-19301	56	63110-19351	24	63110-19411	56	63110-19811	5
63110-19301	68	63110-19351	31	63110-19411	68	63110-19811	9
63110-19301	69	63110-19351	34	63110-19411	69	63110-19811	13
63110-19301	79	63110-19351	38	63110-19411	79	63110-19831	31
63110-19301	80	63110-19351	41	63110-19411	80	63110-19831	34
63110-19301	98	63110-19351	87	63110-19411	87	63110-19831	38
63110-19301	100	63110-19351	88	63110-19411	88	63110-19831	41
63110-19311	1	63110-19351	94	63110-19411	94	63110-19891	68
63110-19311	5	63110-19351	95	63110-19411	95	63110-19891	69
63110-19311	9	63110-19351	99	63110-19421	44	63110-19891	79
63110-19311	13	63110-19351	101	63110-19421	56	63110-19891	80
63110-19311	17	63110-19361	44	63110-19421	68	63110-19891	87
63110-19311	24	63110-19361	56	63110-19421	69	63110-19891	88
63110-19311	31	63110-19361	68	63110-19421	79	63110-19891	94
63110-19311	34	63110-19361	69	63110-19421	80	63110-19891	95
63110-19311	38	63110-19361	79	63110-19421	87	63110-19891	98
63110-19311	41	63110-19361	80	63110-19421	88	63110-19891	99

Part No.	Fig.No.	Part No.	Fig.No.	Part No.	Fig.No.	Part No.	Fig.No.
63110-19891	100	63110-32121	87	63130-12612	152	63130-14061	82
63110-19891	101	63110-32121	88	63130-12612	153	63130-14061	84
63110-19921	44	63110-32121	94	63130-12612	180	63130-14061	84
63110-19921	56	63110-32121	95	63130-12612	181	63130-14061	105
63110-19931	44	63110-32301	75	63130-12612	182	63130-14061	107
63110-19931	56	63110-32301	91	63130-12612	183	63130-14061	109
63110-19941	17	63130-11501	4	63130-12621	139	63130-14061	119
63110-19941	24	63130-11501	12	63130-12621	140	63130-14061	121
63110-19951	17	63130-12071	130	63130-12621	141	63130-14061	123
63110-19951	24	63130-12071	131	63130-12621	142	63130-14071	47
63110-19961	68	63130-12071	132	63130-12621	150	63130-14071	49
63110-19961	69	63130-12071	133	63130-12621	151	63130-14071	51
63110-19961	79	63130-12071	134	63130-12621	152	63130-14071	53
63110-19961	80	63130-12071	135	63130-12621	153	63130-14071	55
63110-19961	87	63130-12071	136	63130-12621	169	63130-14071	59
63110-19961	88	63130-12071	138	63130-12621	170	63130-14071	61
63110-19961	94	63130-12071	139	63130-12621	171	63130-14071	63
63110-19961	95	63130-12071	140	63130-12621	172	63130-14071	65
63110-20221	137	63130-12071	141	63130-12621	180	63130-14071	67
63110-20221	143	63130-12071	142	63130-12621	181	63130-14071	72
63110-20221	154	63130-12071	149	63130-12621	182	63130-14071	72
63110-20221	167	63130-12071	150	63130-12621	183	63130-14071	74
63110-20221	173	63130-12071	151	63130-12651	20	63130-14071	74
63110-20221	184	63130-12071	152	63130-12651	27	63130-14071	82
63110-20261	133	63130-12071	153	63130-12651	50	63130-14071	82
63110-20261	137	63130-12071	160	63130-12651	51	63130-14071	84
63110-20261	143	63130-12071	161	63130-12651	54	63130-14071	84
63110-20261	154	63130-12071	162	63130-12651	55	63130-14071	105
63110-20261	163	63130-12071	163	63130-12651	62	63130-14071	107
63110-20261	167	63130-12071	164	63130-12651	63	63130-14071	109
63110-20261	173	63130-12071	165	63130-12651	66	63130-14071	119
63110-20261	184	63130-12071	166	63130-12651	67	63130-14071	121
63110-32111	5	63130-12071	168	63130-12711	50	63130-14071	123
63110-32111	13	63130-12071	169	63130-12711	51	63130-15033	135
63110-32111	17	63130-12071	170	63130-12711	54	63130-15033	136
63110-32111	24	63130-12071	171	63130-12711	55	63130-15033	165
63110-32111	31	63130-12071	172	63130-12711	62	63130-15033	166
63110-32111	34	63130-12071	179	63130-12711	66	63130-15083	52
63110-32111	38	63130-12071	180	63130-12711	67	63130-15083	53
63110-32111	41	63130-12071	181	63130-12751	137	63130-15083	54
63110-32111	44	63130-12071	182	63130-12751	143	63130-15083	55
63110-32111	56	63130-12071	183	63130-12751	154	63130-15083	64
63110-32111	68	63130-12601	139	63130-12751	167	63130-15083	65
63110-32111	69	63130-12601	140	63130-12751	173	63130-15083	66
63110-32111	79	63130-12601	141	63130-12751	184	63130-15083	67
63110-32111	80	63130-12601	142	63130-14061	47	63130-15083	73
63110-32111	87	63130-12601	150	63130-14061	49	63130-15083	74
63110-32111	88	63130-12601	151	63130-14061	51	63130-15083	76
63110-32111	94	63130-12601	152	63130-14061	53	63130-15083	83
63110-32111	95	63130-12601	153	63130-14061	55	63130-15083	84
63110-32111	98	63130-12601	169	63130-14061	59	63130-15083	108
63110-32111	99	63130-12601	170	63130-14061	61	63130-15083	109
63110-32111	100	63130-12601	171	63130-14061	63	63130-15083	110
63110-32111	101	63130-12601	172	63130-14061	65	63130-15083	122
63110-32121	44	63130-12601	180	63130-14061	67	63130-15083	123
63110-32121	56	63130-12601	181	63130-14061	72	63130-15083	124
63110-32121	68	63130-12601	182	63130-14061	72	63130-15103	21
63110-32121	69	63130-12601	183	63130-14061	74	63130-15103	22
63110-32121	79	63130-12612	150	63130-14061	74	63130-15103	23
63110-32121	80	63130-12612	151	63130-14061	82	63130-15103	28

PARTS NUMBER INDEX

Part No.	Fig.No.	Part No.	Fig.No.	Part No.	Fig.No.	Part No.	Fig.No.
63130-15103	29	63130-21035	82	63130-21050	54	63130-21070	62
63130-15103	30	63130-21035	82	63130-21050	54	63130-21070	64
63130-15301	130	63130-21035	107	63130-21050	55	63130-21070	65
63130-15301	131	63130-21035	119	63130-21050	55	63130-21070	66
63130-15301	132	63130-21040	21	63130-21050	59	63130-21070	67
63130-15301	133	63130-21040	21	63130-21050	63	63130-21070	71
63130-15301	134	63130-21040	22	63130-21050	63	63130-21070	71
63130-15301	135	63130-21040	22	63130-21050	66	63130-21070	71
63130-15301	136	63130-21040	37	63130-21050	67	63130-21070	81
63130-15301	160	63130-21040	52	63130-21050	74	63130-21070	81
63130-15301	161	63130-21040	53	63130-21050	84	63130-21070	104
63130-15301	162	63130-21040	54	63130-21050	107	63130-21070	169
63130-15301	163	63130-21040	55	63130-21050	121	63130-21070	170
63130-15301	164	63130-21040	64	63130-21053	64	63130-21070	171
63130-15301	165	63130-21040	65	63130-21053	65	63130-21070	172
63130-15301	166	63130-21040	66	63130-21053	66	63130-21071	150
63130-15321	75	63130-21040	67	63130-21053	67	63130-21071	151
63130-15321	91	63130-21040	74	63130-21055	28	63130-21071	152
63130-15771	137	63130-21040	84	63130-21055	29	63130-21071	153
63130-15771	143	63130-21040	90	63130-21055	51	63130-21071	180
63130-15771	154	63130-21040	96	63130-21055	52	63130-21071	181
63130-15771	167	63130-21040	107	63130-21055	53	63130-21075	28
63130-15771	173	63130-21040	108	63130-21055	54	63130-21075	29
63130-15771	184	63130-21040	121	63130-21055	55	63130-21075	46
63130-15921	137	63130-21044	52	63130-21055	63	63130-21075	50
63130-15921	143	63130-21044	53	63130-21055	64	63130-21075	52
63130-15921	154	63130-21044	54	63130-21055	65	63130-21075	53
63130-15921	167	63130-21044	55	63130-21055	66	63130-21075	54
63130-15921	173	63130-21045	21	63130-21055	67	63130-21075	55
63130-15921	184	63130-21045	22	63130-21055	84	63130-21075	62
63130-16432	46	63130-21045	28	63130-21055	121	63130-21075	62
63130-16432	47	63130-21045	29	63130-21060	21	63130-21075	64
63130-16432	52	63130-21045	37	63130-21060	22	63130-21075	65
63130-16432	53	63130-21045	64	63130-21060	33	63130-21075	66
63130-16432	58	63130-21045	65	63130-21060	90	63130-21075	67
63130-16432	59	63130-21045	66	63130-21060	96	63130-21075	72
63130-16432	64	63130-21045	67	63130-21060	128	63130-21075	73
63130-16432	65	63130-21045	74	63130-21065	21	63130-21075	81
63130-21030	21	63130-21045	84	63130-21065	22	63130-21075	82
63130-21030	22	63130-21045	90	63130-21065	50	63130-21075	83
63130-21030	33	63130-21045	96	63130-21065	51	63130-21075	106
63130-21030	37	63130-21045	107	63130-21065	63	63130-21075	118
63130-21030	47	63130-21045	121	63130-21065	139	63130-21075	120
63130-21030	49	63130-21045	122	63130-21065	140	63130-21075	139
63130-21030	51	63130-21047	64	63130-21065	141	63130-21075	140
63130-21030	61	63130-21047	65	63130-21065	142	63130-21075	141
63130-21030	72	63130-21047	66	63130-21070	28	63130-21075	142
63130-21030	72	63130-21047	67	63130-21070	29	63130-21076	182
63130-21030	105	63130-21050	21	63130-21070	40	63130-21076	183
63130-21030	114	63130-21050	22	63130-21070	50	63130-21080	8
63130-21034	52	63130-21050	28	63130-21070	50	63130-21080	16
63130-21034	53	63130-21050	28	63130-21070	52	63130-21080	52
63130-21034	54	63130-21050	29	63130-21070	52	63130-21080	53
63130-21034	55	63130-21050	29	63130-21070	53	63130-21080	54
63130-21035	28	63130-21050	37	63130-21070	53	63130-21080	55
63130-21035	29	63130-21050	47	63130-21070	54	63130-21080	62
63130-21035	40	63130-21050	51	63130-21070	54	63130-21080	64
63130-21035	59	63130-21050	51	63130-21070	55	63130-21080	65
63130-21035	63	63130-21050	52	63130-21070	55	63130-21080	66
63130-21035	74	63130-21050	53	63130-21070	58	63130-21080	67

Part No.	Fig.No.	Part No.	Fig.No.	Part No.	Fig.No.	Part No.	Fig.No.
63130-21080	169	63130-21105	172	63130-21139	182	63130-21175	169
63130-21080	170	63130-21105	172	63130-21139	183	63130-21175	170
63130-21080	171	63130-21111	150	63130-21140	74	63130-21175	171
63130-21080	172	63130-21111	151	63130-21140	84	63130-21175	172
63130-21084	150	63130-21111	152	63130-21140	107	63130-21178	150
63130-21084	151	63130-21111	153	63130-21140	121	63130-21178	151
63130-21084	152	63130-21111	180	63130-21140	139	63130-21178	152
63130-21084	153	63130-21111	181	63130-21140	140	63130-21178	153
63130-21084	180	63130-21115	139	63130-21140	141	63130-21178	180
63130-21084	181	63130-21115	140	63130-21140	142	63130-21178	181
63130-21085	52	63130-21115	141	63130-21143	182	63130-21183	182
63130-21085	53	63130-21115	142	63130-21143	183	63130-21183	183
63130-21085	54	63130-21116	182	63130-21145	139	63130-21185	139
63130-21085	55	63130-21116	183	63130-21145	139	63130-21185	140
63130-21085	64	63130-21120	137	63130-21145	140	63130-21185	141
63130-21085	65	63130-21120	143	63130-21145	140	63130-21185	142
63130-21085	66	63130-21120	154	63130-21145	141	63130-21190	169
63130-21085	67	63130-21120	167	63130-21145	141	63130-21190	170
63130-21085	137	63130-21120	169	63130-21145	142	63130-21190	171
63130-21085	143	63130-21120	170	63130-21145	142	63130-21190	172
63130-21085	154	63130-21120	171	63130-21145	169	63130-21195	139
63130-21085	167	63130-21120	172	63130-21145	170	63130-21195	140
63130-21085	173	63130-21120	173	63130-21145	171	63130-21195	141
63130-21085	184	63130-21120	184	63130-21145	172	63130-21195	142
63130-21089	182	63130-21121	150	63130-21150	139	63130-21200	150
63130-21089	183	63130-21121	151	63130-21150	140	63130-21200	151
63130-21090	139	63130-21121	152	63130-21150	141	63130-21200	152
63130-21090	140	63130-21121	153	63130-21150	142	63130-21200	153
63130-21090	141	63130-21121	180	63130-21150	169	63130-21200	169
63130-21090	142	63130-21121	181	63130-21150	169	63130-21200	170
63130-21095	169	63130-21125	139	63130-21150	170	63130-21200	171
63130-21095	170	63130-21125	140	63130-21150	170	63130-21200	172
63130-21095	171	63130-21125	141	63130-21150	171	63130-21200	180
63130-21095	172	63130-21125	142	63130-21150	171	63130-21200	181
63130-21096	150	63130-21126	182	63130-21150	172	63130-21205	182
63130-21096	151	63130-21126	183	63130-21150	172	63130-21205	183
63130-21096	152	63130-21130	139	63130-21155	169	63130-21210	139
63130-21096	153	63130-21130	140	63130-21155	170	63130-21210	140
63130-21096	180	63130-21130	141	63130-21155	171	63130-21210	141
63130-21096	181	63130-21130	142	63130-21155	172	63130-21210	142
63130-21100	73	63130-21130	169	63130-21156	150	63130-21215	169
63130-21100	83	63130-21130	170	63130-21156	151	63130-21215	170
63130-21100	106	63130-21130	171	63130-21156	152	63130-21215	171
63130-21100	120	63130-21130	172	63130-21156	153	63130-21215	172
63130-21100	139	63130-21134	150	63130-21156	180	63130-21216	150
63130-21100	139	63130-21134	151	63130-21156	181	63130-21216	151
63130-21100	140	63130-21134	152	63130-21160	139	63130-21216	152
63130-21100	140	63130-21134	153	63130-21160	140	63130-21216	153
63130-21100	141	63130-21134	180	63130-21160	141	63130-21216	180
63130-21100	141	63130-21134	181	63130-21160	142	63130-21216	181
63130-21100	142	63130-21135	169	63130-21161	182	63130-21221	182
63130-21100	142	63130-21135	170	63130-21161	183	63130-21221	183
63130-21101	182	63130-21135	171	63130-21165	169	63130-21230	139
63130-21101	183	63130-21135	172	63130-21165	170	63130-21230	140
63130-21105	169	63130-21138	150	63130-21165	171	63130-21230	141
63130-21105	169	63130-21138	151	63130-21165	172	63130-21230	142
63130-21105	170	63130-21138	152	63130-21170	139	63130-21235	169
63130-21105	170	63130-21138	153	63130-21170	140	63130-21235	170
63130-21105	171	63130-21138	180	63130-21170	141	63130-21235	171
63130-21105	171	63130-21138	181	63130-21170	142	63130-21235	172

PARTS NUMBER INDEX

Part No.	Fig.No.	Part No.	Fig.No.	Part No.	Fig.No.	Part No.	Fig.No.
63130-21280	139	63130-22080	58	63130-31040	135	63130-31090	74
63130-21280	140	63130-22080	59	63130-31040	136	63130-31090	83
63130-21280	141	63130-22080	60	63130-31040	165	63130-31090	84
63130-21280	142	63130-22080	61	63130-31040	166	63130-31100	71
63130-21285	169	63130-22080	62	63130-31042	20	63130-31100	72
63130-21285	170	63130-22080	62	63130-31042	27	63130-31100	81
63130-21285	171	63130-22080	63	63130-31045	3	63130-31100	82
63130-21285	172	63130-22080	63	63130-31045	19	63130-31100	90
63130-22070	46	63130-22085	46	63130-31045	20	63130-31100	96
63130-22070	46	63130-22085	47	63130-31050	4	63130-31105	71
63130-22070	47	63130-22085	48	63130-31050	4	63130-31105	72
63130-22070	47	63130-22085	49	63130-31050	7	63130-31105	81
63130-22070	48	63130-22085	50	63130-31050	11	63130-31105	82
63130-22070	48	63130-22085	50	63130-31050	15	63130-31105	90
63130-22070	49	63130-22085	51	63130-31050	19	63130-31105	96
63130-22070	49	63130-22085	51	63130-31050	20	63136-20901	56
63130-22070	58	63130-22085	58	63130-31050	26	63136-20901	57
63130-22070	59	63130-22085	59	63130-31050	27	63136-20911	45
63130-22070	60	63130-22085	60	63130-31055	19	63136-20911	57
63130-22070	61	63130-22085	61	63130-31055	27	63136-20921	57
63130-22070	73	63130-22085	62	63130-31055	137	63136-21001	56
63130-22070	74	63130-22085	62	63130-31055	143	63136-21001	57
63130-22070	83	63130-22085	63	63130-31055	154	63136-21011	56
63130-22070	84	63130-22085	63	63130-31055	167	63136-21011	57
63130-22075	46	63130-22090	50	63130-31055	173	63136-21101	45
63130-22075	47	63130-22090	50	63130-31055	184	63136-21101	57
63130-22075	48	63130-22090	51	63130-31060	19	63136-21111	45
63130-22075	49	63130-22090	51	63130-31060	20	63136-21111	57
63130-22075	50	63130-22090	62	63130-31060	26	63136-21201	57
63130-22075	50	63130-22090	62	63130-31065	19	63136-21211	57
63130-22075	50	63130-22090	63	63130-31065	19	63136-23201	57
63130-22075	50	63130-22090	63	63130-31065	27	63146-20001	56
63130-22075	51	63130-26011	44	63130-31070	26	63146-20011	56
63130-22075	51	63130-26011	56	63130-31075	26	63146-20021	56
63130-22075	51	63130-26130	44	63130-31075	71	63146-20031	56
63130-22075	51	63130-26130	56	63130-31075	72	63146-20041	56
63130-22075	58	63130-26145	44	63130-31075	73	63146-20051	56
63130-22075	59	63130-26145	56	63130-31075	74	63146-20061	56
63130-22075	60	63130-26160	44	63130-31075	81	63146-20071	56
63130-22075	61	63130-26160	56	63130-31075	82	63146-20101	56
63130-22075	62	63130-31033	50	63130-31075	83	63146-20111	56
63130-22075	62	63130-31033	51	63130-31075	84	63146-20121	56
63130-22075	62	63130-31033	54	63130-31075	90	63146-20151	56
63130-22075	62	63130-31033	55	63130-31075	96	63146-20161	56
63130-22075	62	63130-31033	62	63130-31080	71	63146-20171	56
63130-22075	62	63130-31033	63	63130-31080	72	63146-20302	56
63130-22075	63	63130-31033	66	63130-31080	73	63146-22801	44
63130-22075	63	63130-31033	67	63130-31080	74	63146-22801	56
63130-22075	63	63130-31035	12	63130-31080	81	63146-22801	58
63130-22075	63	63130-31035	20	63130-31080	82	63146-22801	59
63130-22075	63	63130-31035	20	63130-31080	83	63153-40613	38
63130-22075	63	63130-31035	27	63130-31080	84	63153-40613	41
63130-22080	46	63130-31040	4	63130-31080	90	63153-40613	41
63130-22080	47	63130-31040	7	63130-31080	96	63153-40623	38
63130-22080	48	63130-31040	15	63130-31085	26	63153-40623	41
63130-22080	49	63130-31040	20	63130-31085	73	63153-40633	38
63130-22080	50	63130-31040	20	63130-31085	74	63153-40633	41
63130-22080	50	63130-31040	27	63130-31085	83	63153-40643	38
63130-22080	51	63130-31040	27	63130-31085	84	63153-40643	41
63130-22080	51	63130-31040	27	63130-31090	73	63153-40653	38

Part No.	Fig.No.	Part No.	Fig.No.	Part No.	Fig.No.	Part No.	Fig.No.
63153-40653	41	63169-30371	100	63183-40601	41	63300-31155	138
63153-40663	38	63169-30371	101	63246-20001	56	63300-31155	139
63153-40663	41	63169-30381	100	63246-20011	56	63300-31155	140
63153-82701	109	63169-30381	101	63246-20021	56	63300-31155	168
63153-82701	123	63169-30391	100	63246-20031	56	63300-31155	169
63160-12401	149	63169-30391	101	63246-20041	56	63300-31155	170
63160-12401	150	63169-30401	100	63246-20051	56	63300-31165	138
63160-12401	150	63169-30401	101	63246-20061	56	63300-31165	139
63160-12401	151	63169-30411	100	63246-20071	56	63300-31165	140
63160-12401	151	63169-30411	101	63246-20101	56	63300-31165	168
63160-12401	152	63170-12002	149	63246-20111	56	63300-31165	169
63160-12401	153	63170-12002	150	63246-20121	56	63300-31165	170
63160-12401	160	63170-12002	151	63246-20152	44	63300-31170	138
63160-12401	161	63170-12002	179	63246-20302	56	63300-31170	139
63160-12401	162	63170-12002	180	63300-21255	139	63300-31170	140
63160-12401	163	63170-12002	181	63300-21255	140	63300-31170	168
63160-12401	164	63170-12101	149	63300-21255	169	63300-31170	169
63160-12401	165	63170-12101	150	63300-21255	170	63300-31170	170
63160-12401	166	63170-12101	151	63300-31090	138	63300-31175	138
63160-12401	179	63170-12101	179	63300-31090	139	63300-31175	138
63160-12401	180	63170-12101	180	63300-31090	140	63300-31175	139
63160-12401	180	63170-12101	181	63300-31090	168	63300-31175	139
63160-12401	181	63170-12161	149	63300-31090	169	63300-31175	140
63160-12401	181	63170-12161	150	63300-31090	170	63300-31175	140
63160-12401	182	63170-12161	151	63300-31100	138	63300-31175	168
63160-12401	183	63170-12161	179	63300-31100	139	63300-31175	168
63163-40921	42	63170-12161	180	63300-31100	140	63300-31175	169
63163-80501	24	63170-12161	181	63300-31100	168	63300-31175	169
63163-80511	24	63173-40901	41	63300-31100	169	63300-31175	170
63163-80602	24	63173-40901	42	63300-31100	170	63300-31175	170
63163-80602	25	63173-40911	41	63300-31115	138	63300-31185	138
63163-80801	24	63173-40911	42	63300-31115	139	63300-31185	139
63163-80811	24	63173-40961	42	63300-31115	140	63300-31185	140
63163-80821	24	63173-40971	42	63300-31115	168	63300-31185	168
63163-82502	24	63173-42721	34	63300-31115	169	63300-31185	169
63163-82512	24	63173-42721	41	63300-31115	170	63300-31185	170
63166-12321	9	63173-42821	35	63300-31125	138	63300-31195	138
63166-12601	9	63173-42821	42	63300-31125	138	63300-31195	139
63169-10101	116	63173-80311	24	63300-31125	139	63300-31195	140
63169-10101	126	63173-80321	24	63300-31125	139	63300-31195	168
63169-12001	116	63173-80331	24	63300-31125	140	63300-31195	169
63169-12001	126	63173-80341	24	63300-31125	140	63300-31195	170
63169-30101	100	63173-80351	24	63300-31125	168	63300-31210	138
63169-30101	101	63173-80361	24	63300-31125	168	63300-31210	139
63169-30301	100	63173-80371	24	63300-31125	169	63300-31210	140
63169-30301	101	63173-80411	24	63300-31125	169	63300-31210	168
63169-30301	101	63173-80421	24	63300-31125	170	63300-31210	169
63169-30311	100	63173-80431	24	63300-31125	170	63300-31210	170
63169-30311	101	63173-80441	24	63300-31140	138	63300-31220	138
63169-30311	101	63173-80451	24	63300-31140	139	63300-31220	139
63169-30321	100	63173-80461	24	63300-31140	140	63300-31220	140
63169-30321	101	63173-80471	24	63300-31140	168	63300-31220	168
63169-30331	100	63176-10201	9	63300-31140	169	63300-31220	169
63169-30331	101	63176-10211	9	63300-31140	170	63300-31220	170
63169-30341	100	63176-10221	9	63300-31150	138	63300-31235	138
63169-30341	101	63179-10101	97	63300-31150	139	63300-31235	139
63169-30351	100	63179-10111	97	63300-31150	140	63300-31235	140
63169-30351	101	63183-40201	41	63300-31150	168	63300-31235	168
63169-30361	100	63183-40301	41	63300-31150	169	63300-31235	169
63169-30361	101	63183-40501	41	63300-31150	170	63300-31235	170

PARTS NUMBER INDEX

Part No.	Fig.No.	Part No.	Fig.No.	Part No.	Fig.No.	Part No.	Fig.No.
63300-31255	138	63810-12081	161	97060-45111	182		
63300-31255	168	63810-12081	163	97060-45111	183		
63300-31280	138	63810-12081	164				
63300-31280	139	63810-12081	165				
63300-31280	140	63810-12081	166				
63300-31280	168	63810-12081	169				
63300-31280	169	63810-12081	170				
63300-31280	170	63810-12081	179				
63549-12041	85	63810-12081	180				
63549-12041	116	63810-12081	180				
63626-23051	35	63810-12081	181				
63626-23051	42	63810-12081	181				
63633-42321	31	63810-12081	182				
63633-42321	38	63810-12081	183				
63680-12401	139	64536-12241	45				
63680-12401	140	64536-12241	57				
63680-12401	149	80223-00071	44				
63680-12401	150	80223-00071	56				
63680-12401	150	83173-80301	24				
63680-12401	151	83173-80401	24				
63680-12401	151	90106-65690	78				
63680-12401	152	90106-65690	93				
63680-12401	153	90106-65690	103				
63680-12401	169	90106-65690	113				
63680-12401	170	90106-65690	117				
63680-12401	179	90106-65690	127				
63680-12401	180	97050-01840	7				
63680-12401	180	97050-01850	8				
63680-12401	181	97050-01850	15				
63680-12401	181	97050-01850	16				
63680-12401	182	97050-01971	139				
63680-12401	183	97050-01971	140				
63680-12411	130	97050-01971	141				
63680-12411	131	97050-01971	142				
63680-12411	133	97050-01971	150				
63680-12411	134	97050-01971	151				
63680-12411	135	97050-01971	152				
63680-12411	136	97050-01971	153				
63680-12411	160	97050-01971	169				
63680-12411	161	97050-01971	170				
63680-12411	163	97050-01971	171				
63680-12411	164	97050-01971	172				
63680-12411	165	97050-01971	180				
63680-12411	166	97050-01971	181				
63810-12081	130	97050-01971	182				
63810-12081	131	97050-01971	183				
63810-12081	133	97060-45111	139				
63810-12081	134	97060-45111	140				
63810-12081	135	97060-45111	141				
63810-12081	136	97060-45111	142				
63810-12081	139	97060-45111	150				
63810-12081	140	97060-45111	151				
63810-12081	149	97060-45111	152				
63810-12081	150	97060-45111	153				
63810-12081	150	97060-45111	169				
63810-12081	151	97060-45111	170				
63810-12081	151	97060-45111	171				
63810-12081	152	97060-45111	172				
63810-12081	153	97060-45111	180				
63810-12081	160	97060-45111	181				

No.PA-36AA
2003年 10月　　発行

TCM株式会社
本　社　大阪市西区京町堀1－15－10
発 行　　TCMテクノ株式会社

ISSUED:OCTOBER,2003

TCM CORPORATION
INTERNATIONAL MARKETING DIVISION : 1-15-5, Nishi－shimbashi, Minato－ku, Tokyo
105－0003, Japan
FAX : Japan ＋81－3－35918152, 3－35918153

無断で転載・複製を禁ず
All rights reserved.

SA－0310001(H)　Printed in Japan

TCM 株式会社